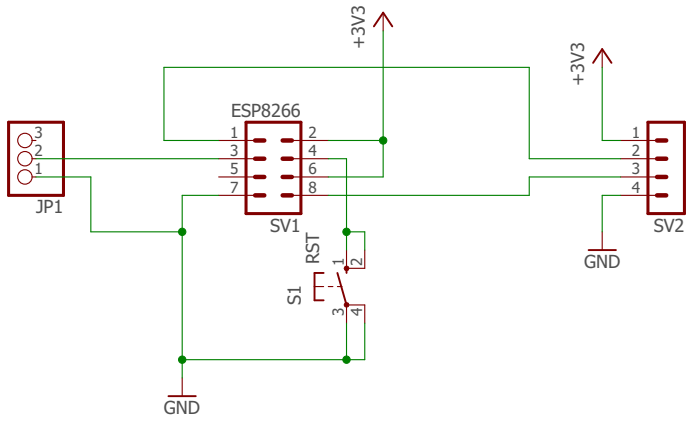


| | |
|---|---|
| TITLE: ESP8266 Programmer | |
| Document Number: | REV: |
| Date: 11/18/2017 4:05 PM | Sheet: 1/1 |