Indicate Secrecy Classification in accordance with ISM, as necessary.

To:Longcheer Technology Co,. Ltd

Issue No. : ————

Date of Issue : Mar. 1, 2016

Classification : ☐ New ☐ Change

PRODUCT SPECIFICATION FOR APPROVAL

Product Description : NARROW-PITCH CONNECTORS

Product Part Number : ————

Panasonic Part Number : AXG7○○0J7HB1 / AXG8○○0J4HB1

Drawing Name : SPECIFICATIONS

* If you approve this specification, please fill in and sign the below and return 1 copy to us.

Approval No. :

Approval Date :

Executed by :

(Signature)

Title :

Dept. :

Electromechanical Control Business Division
Automotive & Industrial Systems Company
Panasonic Corporation

Prepared by : Application Devices Business Unit
Contact Person Connector Business Planning & Development Department

Signature Y. minai

Name (Print) Yuki minai

Title

Phone +81-596-58-2995

Checked by :

Signature H. Ueda

Name (Print) Hiroki ueda

Title

Authorized by :

Signature K. Yoshioka

Name (Print) Kosuke yoshioka

Title

Panasonic

Order Placement Recommendations and Considerations

The Products and Specifications listed in this document are subject to change (including specifications, manufacturing facility and discontinuing the Products) as occasioned by the improvements of Products. Consequently, when you review the mass-production design for the Products listed or when you place orders for these Products, Panasonic Corporation asks you to contact one of our customer service representatives and check that the details listed in the document are commensurate with the most up-to-date information.

[Safety precautions]

Panasonic Corporation is consistently striving to improve quality and reliability. However, the fact remains that electrical components and devices generally cause failures at a given statistical probability. Furthermore, their durability varies with use environments or use conditions. In this respect, please check for actual electrical components and devices under actual conditions before use. Continued usage in a state of degraded condition may cause the deteriorated insulation, thus result in abnormal heat, smoke or firing. Please carry out safety design and periodic maintenance including redundancy design, design for fire spread prevention, and design for malfunction prevention so that no accidents resulting in injury or death, fire accidents, or social damage will be caused as a result of failure of the Products or ending life of the Products.

As scope of warranty changes in accordance with your application, quality standards of Products fall into the following three categories depending on the applications of the products: Reference Standards, Special Standards, and Specified Standards that meet the quality assurance program designated by the customer. These quality standards have been established so that our products will be used for the applications listed below.

Reference Standards: Computers, office automation equipment, communications equipment, audio-video products, home electrical appliances, machine tools, personal devices, industrial robots

Special Standards: Transportation equipment (automobiles, trains, ships, etc.), traffic signal equipment, crime and disaster prevention devices, electric power equipment, various safety devices, and medical equipment not directly targeted for life support

Specified Standards: Aircraft equipment, aeronautical and space equipment, seabed relay equipment, nuclear power control systems, and medical equipment, devices and systems for life support

In the case that your usage is under the following conditions without exchanging the new specifications, Panasonic Corporation shall not warrant the quality of the Products. Panasonic Corporation asks you to contact one of our customer service representatives before exchange written in specifications.

(1) When our products are to be used in any of the applications listed for the Special Standards or Specified Standards

(2) When, even for any of the applications listed for the Reference Standards, our products may possibly be used beyond the range of the specifications, environment or conditions listed in the document or when you are considering the use of our products in any conditions or an environment that is not listed in the document

(3) When you change to other equipment that have different usage condition after exchange the specifications in the usage above condition (1).

[Acceptance inspection]

In connection with the products you have purchased from us or with the products delivered to your premises, please perform an acceptance inspection with all due speed and, in connection with the handling of our products both before and during the acceptance inspection, please give full consideration to the control and preservation of our products.

[Warranty period]

Unless otherwise stipulated by both parties, the warranty period of our products is one year after their purchase by you or after their delivery to the location specified by you.

[Scope of warranty]

In the event that Panasonic Corporation confirms any failures or defects of the Products by reasons solely attributable to Panasonic Corporation during the warranty period, Panasonic Corporation shall supply the replacements of the Products, parts or replace and/or repair the defective portion by free of charge at the location where the Products were purchased or delivered to your premises as soon as possible.

However, the following failures and defects are not covered by the warranty:

(1) When the failure or defect was caused by a specification, standard, handling method, etc. which was specified by you

(2) When the failure or defect was caused after purchase or delivery to your premises by an alteration in construction, performance, specification, etc. which did not involve us

(3) When the failure or defect was caused by a phenomenon that could not be predicted by the technology at purchasing or contracted time

(4) When the use of our Products deviated from the scope of the conditions and environment set forth in the catalog and specifications

(5) When, after our Products were incorporated into your Products or equipment for use, damage resulted which could have been avoided if your Products or equipment had been equipped with the functions, construction, etc. the provision of which is accepted practice in the industry

(6) When the failure or defect was caused by a natural disaster or other force majeure

The terms and conditions of the warranty set forth in this Order Placement Recommendations and Consideration shall apply to the Products purchased or delivered to your premises. And the above terms and conditions shall not cover any induced damages by the failure or defects of the Products.

Panasonic Corporation

Electromechanical Control Business Division

SPECIFICATIONS

NARROW-PITCH CONNECTORS

AXG7○○0J7HB1 / AXG8○○0J4HB1

1. Name : Narrow-pitch connectors for PC board to FPC board

2. Type : A35US with power terminal(Terminal spacing 0.35 mm 2 rows)
Stacking height 0.6 mm

3. Part No.

3-1) Part No. Socket : AXG7○○0J7HB1
Header : AXG8○○0J4HB1

3-2) Product drawing Socket : AXG7200J7HB1
Header : AXG8200J4HB1

Recommended metal mask opening pattern Socket : AXG7-SM-006 △2
header : AXG8-SM-002

Package drawing Socket : AXG7200J7HB1H (Embossed packaging)
Header : AXG8200J4HB1H (Embossed packaging)

3-3) Ordering information

AXG○ ○ ○ 0 J ○ HB 1

AXG7 : A35US socket
AXG8 : A35US header

・Number of contacts (2 digits) *Remark
10:10 contacts 12:12 contacts 16:16 contacts
20:20 contacts 24:24 contacts 30:30 contacts
34:34 contacts 40:40 contacts 50:50 contacts
60:60 contacts

・Stacking height

Socket	Header
0 : 0.6 mm	0 : 0.6 mm

・Function
J : No positioning projections／With power terminal

・Plating (contact／terminal)

Socket	Header
7 : (Au ／ Au + Ni Barrier)	4 : (Au ／ Au)

・User No. (2 digits)
HB

・Code
1

*Remark ・Refer to product drawing about variety of stacking height and number of contacts.

To:Longcheer Technology Co,. Ltd		DATE : Sep. 22, 2014	△1	Mar. 20, ' 15
Panasonic Corporation	Drawn by Y. Minai	Reviewed by	△2	Mar. 01, ' 16
	Checked by H. Ueda	Approved by K. Tohishi		

4. Material : Molded portion : Heat resistant plastic (UL 94V-0), Black
: Signal terminal : Copper Alloy
: Power terminal : Copper Alloy

5. Plating : Signal terminal (Socket / Header)
: Contact portion (Main): Au plating (Min. 0.1 μm) over nickel
Contact portion (Sub): Au plating (Min. 0.05 μm) over nickel
: Terminal portion : Au plating over nickel
(except for top of the terminal)
: Power terminal (Socket / Header)
: Contact portion : Au plating over nickel
: Terminal portion : Au plating over nickel
(except for top of the terminal)

6. Characteristics
The followings show specifications, when mated with Socket and Header.

Item	Specification	Test condition
6-1. Electrical characteristics		
1) Rated current	Signal terminal Each pin ; Max. 0.3 A All pins can carry ; Max. 5 A Power terminal Each pin ; Max. 3 A	
2) Rated voltage	AC, DC 60 V	
3) Insulation resistance	Min. 1000 MΩ (Initial stage)	Using 250 V DC megger (1 minute)
4) Breakdown voltage	150 V AC for 1 minute	Detection current : 1 mA
5) Contact resistance	Signal terminal Max. 90 mΩ Power terminal Max. 30 mΩ	According to the method of JIS C 5402
6-2. Mechanical characteristics		
1) Composite insertion force	Max. 1.300 N/contact × Number of contacts. (Initial stage)	
2) Composite removal force	Min. 0.215 N/contact × Number of contacts.	

Item	Specification	Test condition
3) Contact holding force (Socket Signal terminal Header Power terminal)	Min. 0.20 N/contact.	Measuring the maximum force. As the contact or the metal bracket is axially pull out.
6-3. Environmental characteristics		
1) Ambient temperature (Operating temperature)	-55 ℃～+85 ℃	No freezing or condensation
2) Storage temperature	-55 ℃～+85 ℃ (Products only) -40 ℃～+50 ℃ (Packaging structure)	No freezing or condensation
3) Thermal shock resistance (Header and socket mated)	After 5 cycles Contact resistance Max. 90 mΩ (Signal terminal) Max. 30 mΩ (Power terminal) Insulation resistance Min. 100 MΩ (Signal terminal)	Conformed to MIL-STD-202F, method 107G Order / Temperature (℃) / Time (minutes) 1: -55^{0}_{-3}, 30 2: ∫, Max. 5 3: 85^{+3}_{0}, 30 4: ∫ -55^{0}_{-3}, Max. 5
4) Humidity resistance (Header and socket mated)	After 120 hours Contact resistance Max. 90 mΩ (Signal terminal) Max. 30 mΩ (Power terminal) Insulation resistance Min. 100 MΩ (Signal terminal)	IEC60068-2-78 Bath temperature 40 ℃±2 ℃ Humidity 90 % to 95 %RH
5) Salt water spray resistance (Header and socket mated)	After 24 hours Contact resistance Max. 90 mΩ (Signal terminal) Max. 30 mΩ (Power terminal) Insulation resistance Min. 100 MΩ (Signal terminal)	IEC60068-2-11 Bath temperature 35 ℃±2 ℃ Salt water concentration : 5 %±1 %
6) H_2S resistance (Header and socket mated)	After 48 hours Contact resistance Max. 90 mΩ (Signal terminal) Max. 30 mΩ (Power terminal)	Bath temperature 40 ℃±2 ℃ Gas concentration 3 ppm±1 ppm Humidity 75 % to 80 %RH

Item	Specification	Test condition
6-4. Life characteristics Insertion and removal life with no load	30 times ・Contact resistance Max. 90 mΩ (Signal terminal) Max. 30 mΩ (Power terminal) ・Composite removal force Min. 0.215 N/contact × Number of contacts.	Repeated insertion and removal cycles of max. 200 times/hour
6-5. Soldering temperature resistance	The initial specification must be satisfied electrically and mechanically	Max. peak temperature of 260 ℃ Infrared reflow soldering (PC board surface temperature near connector terminals) Soldering iron 300 ℃ within 5 s 350 ℃ within 3 s
6-6. Solder paste thickness	The initial specification must be satisfied electrically and mechanically	Recommendation t=0.10 mm

7. Package : Embossed packaging

8. About safety Remarks

8-1. Do not use these connectors beyond the specified ranges. The use of the product outside of the specified rated current and breakdown voltage ranges may cause abnormal heating, smoke, and fire.

8-2. In order to avoid accidents, make sure you have thoroughly reviewed the specifications and the operation manual before use. Consult us if you plan to use the product in a way not covered by the specifications. Otherwise, the quality cannot be guaranteed.

8-3. We are consistently striving to improve quality and reliability.
However, the fact remains that electrical components and devices generally cause failures at a given statistical probability. Furthermore, their durability varies with use environments or use conditions. In this respect, we ask you to check for actual electrical components and devices under actual conditions before use without fail. Continuously using them in a state of degraded performance may cause deterioration in insulation performance, thus resulting in abnormal heat generation, smoke generation, or firing. To avoid that, we ask you to carry out safety design including redundancy design, design for fire spread prevention, and design for malfunction prevention as well as periodic maintenance so that no accidents resulting in injury or death, fire accidents, or social damage will be caused as a result of our product failure or service life.

9. Precaution for use

When using the connector, comply with the specifications. When failures occur as a result of the product usage outside of the specifications, we cannot guarantee the quality.

10. Remarks

10-1. Regarding PC board design

Refer the recommended PC board pattern for keeping the strength of soldering.

10-2. Connector placement

In case of dry condition, please care the occurrence of static electricity.
The product may be adhered to the embossed carrier tape or the cover tape in dry condition.
Recommended humidity is between 40 to 60% and please remove static electricity by ionizer in manufacturing scene.

10-3. Soldering

1) Manual soldering.

- These connector is low profile type. If too much solder is supplied for hand soldering, It makes miss mating because of interference at soldering portion. Please pay attentions.
- Please use the soldering iron under specification' s temperature and times.
- Please care not to contaminate the contact portion with solder flux from the soldering iron tip. And make sure that the contact portion are not contaminated to dispersed solder flux with a magnifying glass and so on. When the contact portion is contaminated, please clean it by washing or so.
- Please pay attentions. Not to deform terminals when mating or unmating connectors without mounting to PC boards. Don' t apply an excessive force to terminals, or the connection between terminals and a housing may lose.
- Please soldering iron is cleaning.

2) Reflow soldering.

- Please use screen soldering regarding cream solder printing.
- When setting the screen opening area and PC board foot pattern area, refer the recommended PC board pattern and window size of metal mask on the specification sheet, and make sure that the size of board pattern and metal mask at the base of the terminals are not increased.
- Please pay attentions not to provide too much solder. It makes miss mating because of interference at soldering portion when mating.

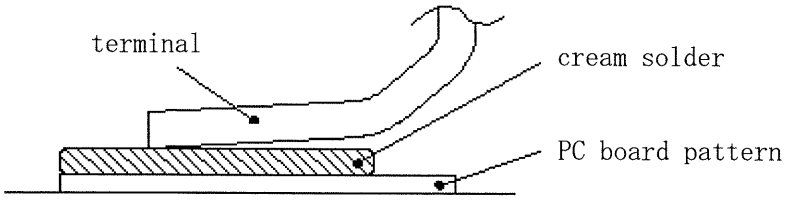

- When applying the different thickness of a screen, please consult us.
- There may be a case of difficult self-alignment depending on the connector size. In that case, please pay attentions to align terminals and solder pads.
- The following diagram shows the recommended reflow soldering temperature profile.

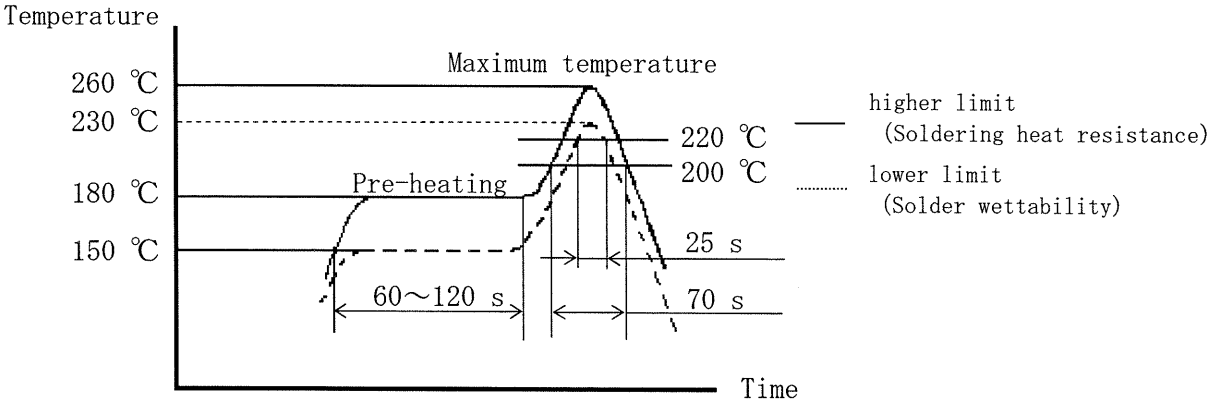

- The temperature is measured on the PC board surface near connector terminals.
- The condition of solder or flux rise and wettability varies depending on the type of solder and flux. Solder and flux characteristics should be taken into consideration and also set the reflow temperature and oxygen level.
- Do not use resin-containing solder. Otherwise, the contacts might be firmly fixed.

3) Rework of soldering portion.

- Rework must be only one time.
- In case of soldering rework of bridges. Please use a flat-head soldering iron and don' t use supplementary solder flux. Doing so may cause contact problems by flux.
- Please use the soldering iron under specification' s temperature.

10-4. Since excessive force on the terminals will cause deformation and the integrity of the soldering will be lost during reflow soldering, avoid dropping or rough handing of the product.

10-5. Be careful not to deform the terminals or brackets when inserting or removing the connector before soldering. Do not put excessive force to terminals. Doing so may loosen the fixation of terminals and molding parts.

10-6. When cutting the PC board after mounting the connector, please assure soldered terminals aren' t affected by the stress.

The stress should not affect the terminals soldered.

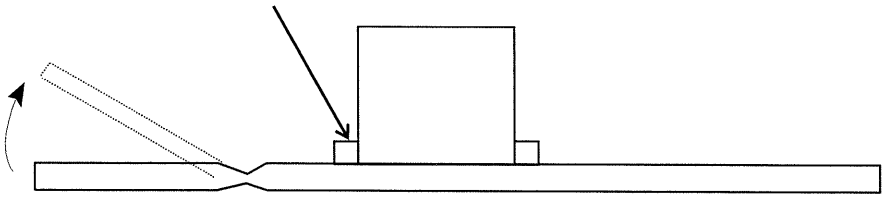

10-7. FPC board specifications

Control the thicknesses of the coverlay and adhesive to prevent poor soldering.
This connector has no stand-off.
Therefore, minimize the thickness of the coverlay, etc. so as to prevent the occurrence of poor soldering.

10-8. When mounting connectors on a FPC board :

・Due to its flexibility,
a FPC board may make the connector terminal soldering connection weak.
In order to strengthen the connection and prevent the peeling off of terminal soldering, a stiffener is strongly recommended to be attached to the backside of the connector area.
The size of stiffener should be bigger than the recommended PC board pattern area shown in the drawing. (Outward dimension + approximate 0.5 to 1.0 mm)
Recommended material of reinforcement is Glass-Fiber board , Polyimide board (0.2 to 0.3 mm thickness) or SUS (0.1 to 0.2 mm thickness) .
which have 0.2 to 0.3 mm thickness.

・The connectors have temporary lock structure. However connecter would be taken off due to size, weight or bending force of FPC at dropping condition.
Please check the connector not to be taken off at real equipment.
In order to secure connector' s connection even when a shock applied, please take measures against taking off of the connector.

10-9. Cleaning treatment

There is no need to clean this product.
If cleaning it, pay attention to the following points to prevent the negative effect to the product

・Keep the cleaning solvent clean and prevent the connector contacts from contamination.

・Some cleaning solvents are strong and they may dissolve the molded part and characters, so pure water passed liquid solvent is recommended

10-10. Restriction on the quantity of connector

・When using the board to board connectors, do not connect a pair of board with multiple connectors. Otherwise, misaligned connector positions may cause mating failure or product breakage.

10-11. Precautions for mating

This product is designed with ease of handling. However, in order to prevent the deformation or damage of contacts and molding, tale care and do not mate the connectors as shown below.

Press-fitting while the mating inlets of the socket and header are not matched.

Strongly pressed and twisted

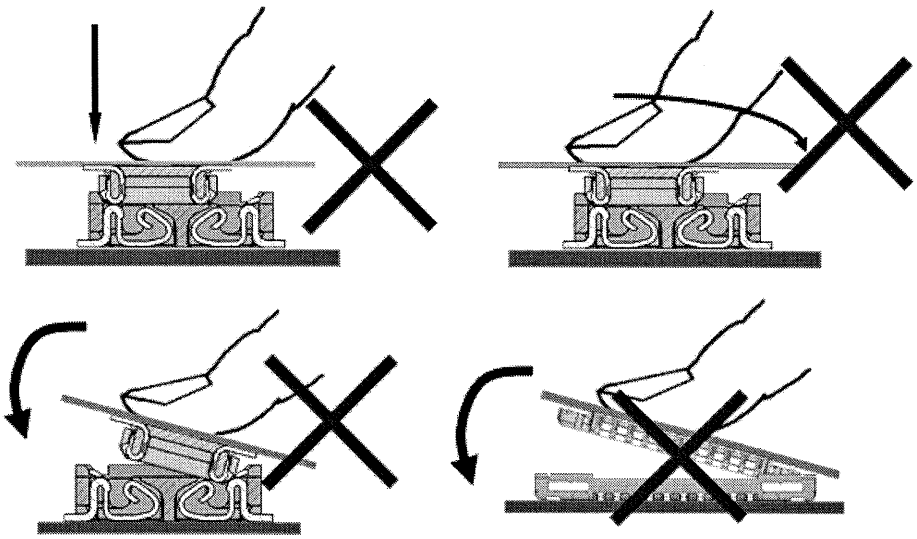

10-12. Precautions for usage environment and storage environment

・Product failures due to condensation are not covered by warranty.

10-13. Other precautions

・When coating the PC board after soldering the connector to prevent the deterioration of isolation, perform the coating in such a way so that the coating does not get on the connector.

・The connectors are not meant to be used for switching.

11. Environmental protection

In the manufacturing process for the products being provided to your company, the following materials are not used at all.

- Ozone-depleting materials ;
  CFC- 11, 12, 13, 111, 112, 113, 114, 115, 211, 212, 213, 214, 215, 216, 217
  Halon 1211, 1301, 2402
  Carbon tetrachloride
  Methyl chloroform
- Polybrominated flame retardants ;
  $PBBO_S$, PBDO, PBDPO, PBDPE, DBDO, OBDO, TBDO, PBB_S, PBDE
- Specified chemical substances (Impurities are excepted) ;
  Mercury, Cadmium, Hexavalent chromium, Lead
- Other toxic substances
  Asbestos
  Organic tin compounds (Tributyl tin compounds, Triphenyl tin compounds)
  Polychlorinated biphenyls
  Polychlorinated naphthalenes
  Azo compounds
  Chlorinated paraffins

12. Product appearance

There is no performance problem though there might be differences in the exposure state of the metal brackets (4 places) shown in the figure below because of a manufacturing method.
Please don' t use these portions for inspection.

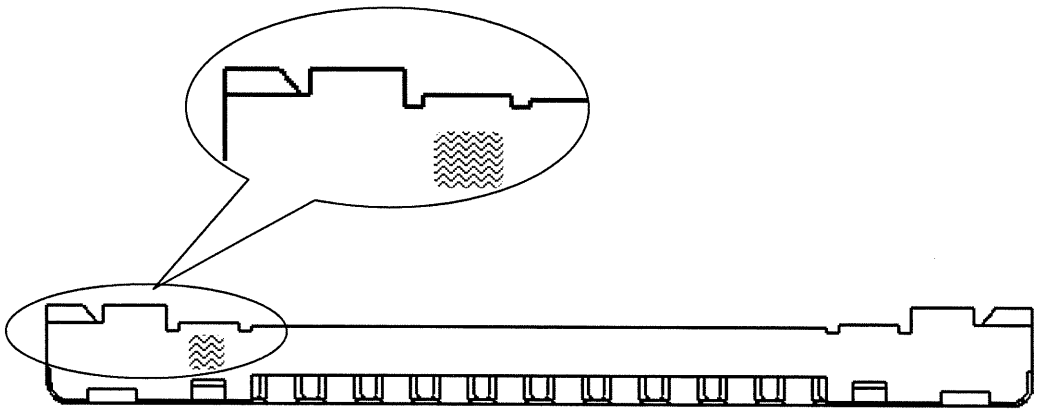

13. Note

Although the best attention will be paid for the quality controls of the products, please consider the followings :

1) To prevent unexpected failures as much as possible under the conditions not shown in this specifications, please let us know the detailed information on the application, such as the environmental, operational and mounting condition.

2) If the product is to be used in equipment or devices for special or specific applications requiring a high grade of quality in which the product may affect human life or property, take safety measures in the design such as redundancy or protection circuit, and conduct safety tests.
The secondary damage such as health damage of equipment users, caused by the failure of the delivered products, is not compensated.

3) We will either repair or replace any products or parts thereof which prove to be defective against only the items written in this specifications within 1 year from the date of products acceptance at the site of delivery.

The following cases are exclusive from the indemnity.

① The case of other damage caused by the failure or defect of the product.

② The case that the product condition changed by handling, storage and / or transportation after delivery.

③ The case caused by the phenomenon which has never been discovered and is impossible to be foreknown with the existing technologies.

④ The case of force majeure, such as acts of Got, public enemy or war, fires, floods and any other causes beyond the control of the people concerned.

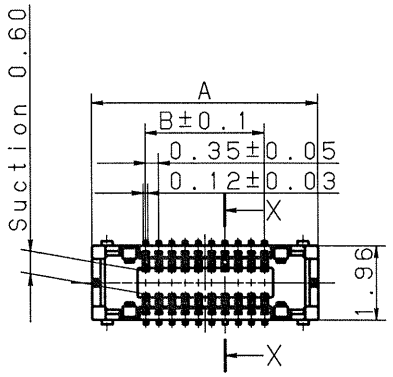

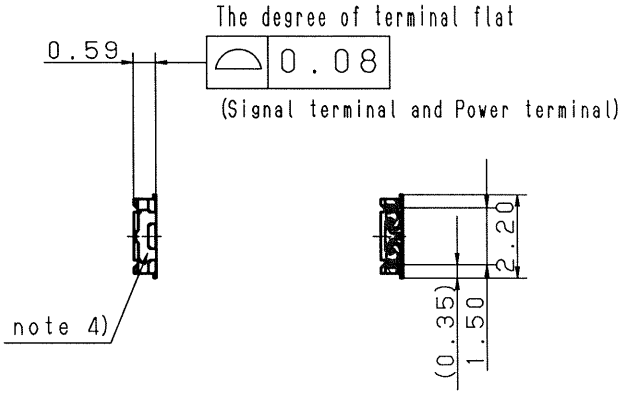

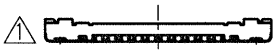

X-X cross section

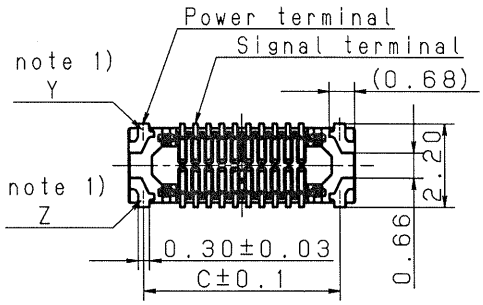

Recommended PC board pattern (mounting pad layout) △2

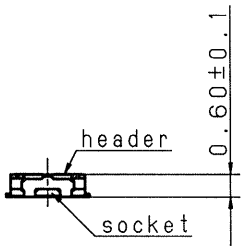

Setting drawing

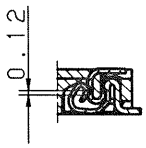

Mating area

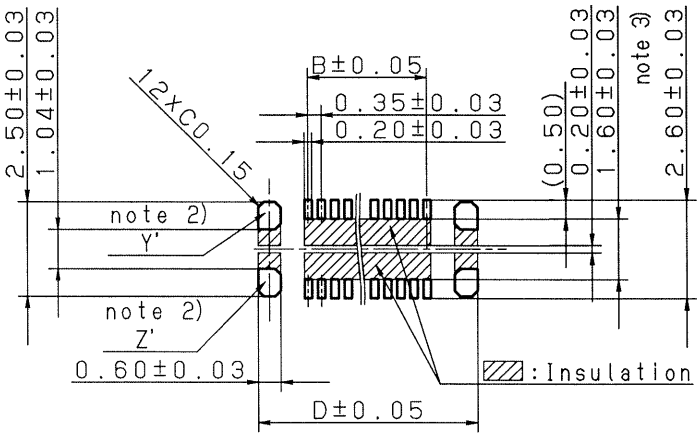

Dimension / No. of contacts	A	B	C	D△2
10	4.25	1.40	3.45	4.05
12	4.60	1.75	3.80	4.40
16	5.30	2.45	4.50	5.10
20	6.00	3.15	5.20	5.80
24	6.70	3.85	5.90	6.50
30	7.75	4.90	6.95	7.55
34	8.45	5.60	7.65	8.25
40	9.50	6.65	8.70	9.30
50	11.25	8.40	10.45	11.05
60	13.00	10.15	12.20	12.80

4) There might be differences in the exposure state of the power terminal except terminal portion.
Please don't use these portions for inspection.

3) Please don't reduce the inside pattern size less than this size because there is a possibility of solder creeping to the contact part.

2) Y' and Z' pattern is connected electrically by the power terminal.

Note 1) Because the power terminal Y and Z are the unified structure, they are connected electrically.

General tolerance ±0.2

Sym	Item or Code No	Material & Size	qt.	Process	Remark

Catalog No		Drawing Name	
Name	Narrow-pitch connectors A35US socket (with power terminal)	Drawing No	AXG7200J7HB1
Remark	To:Longcheer Technology Co,. Ltd	Scale 5 : 1	Unit: mm / Date Sep.22.'14
Drawn A. Kawaguchi	Reviewed	Panasonic Corporation	
Designed Y. Minai	Approved K. Kobayashi		
Checked H. Ueda			

(3rd Angle System) (JIS A-4)

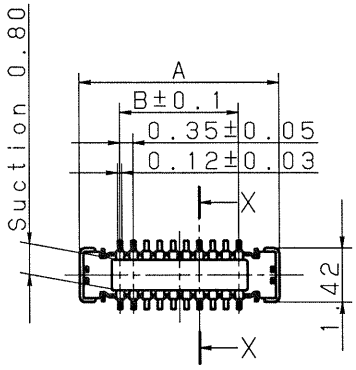

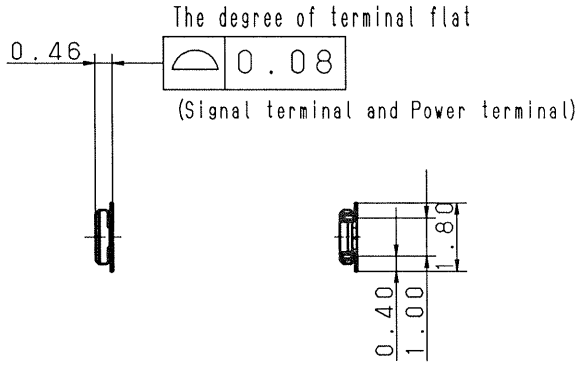

X-X cross section

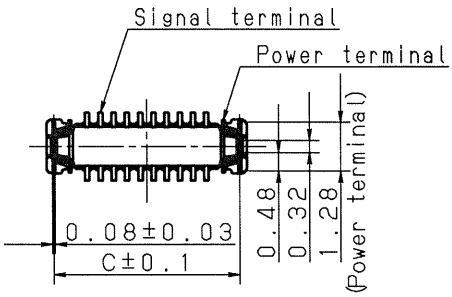

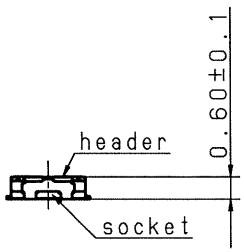

Setting drawing

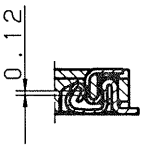

Mating area

Recommended PC board pattern
(mounting pad layout)

(TOP VIEW)

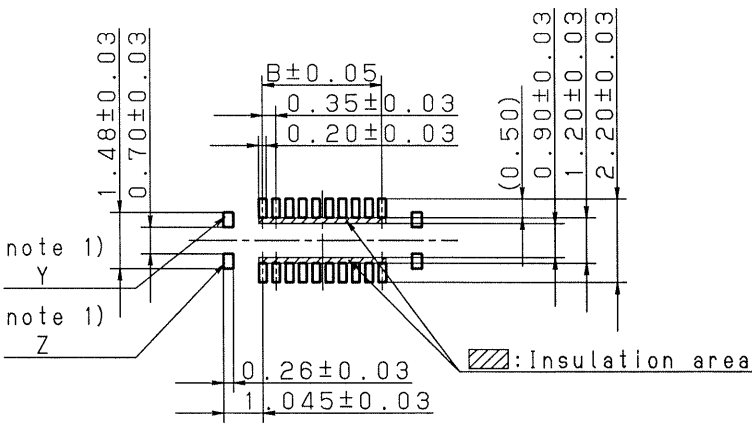

Dimension / No. of contacts	A	B	C
10	3.55	1.40	3.17
12	3.90	1.75	3.52
16	4.60	2.45	4.22
20	5.30	3.15	4.92
24	6.00	3.85	5.62
30	7.05	4.90	6.67
34	7.75	5.60	7.37
40	8.80	6.65	8.42
50	10.55	8.40	10.17
60	12.30	10.15	11.92

Note 1) Y and Z pattern is connected electrically by the power terminal.
General tolerance ±0.2

Sym	Item or Code No	Material & Size	qt.	Process	Remark

Catalog No		Drawing Name	
Name	Narrow-pitch connectors A35US header (with power terminal)	Drawing No	AXG8200J4HB1
Remark	To:Longcheer Technology Co,. Ltd	Scale 5 : 1	Unit: mm / Date Sep.22.'14
Drawn A.Kawaguchi	Reviewed	Panasonic Corporation	
Designed Y. minai	Approved K. Yoshiwara		
Checked M. Ueda			

(3rd Angle System) (JIS A-4)

Recommended metal mask pattern

Metal mask thickness: When 100μm
(Terminal opening ratio:70%)
(Metal-part opening ratio:46%)

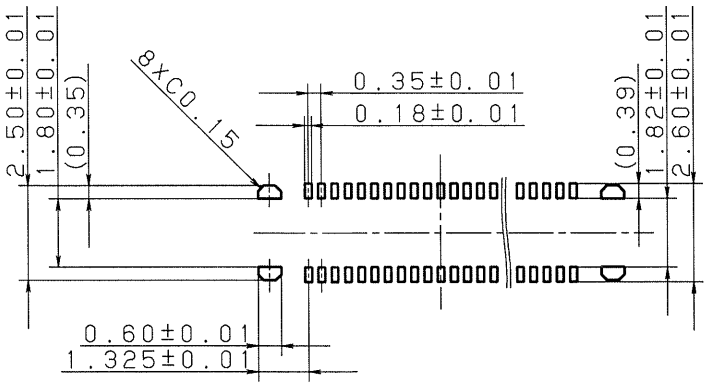

(Reference)
Recommended PC board pattern (mounting pad layout)

(Top view)

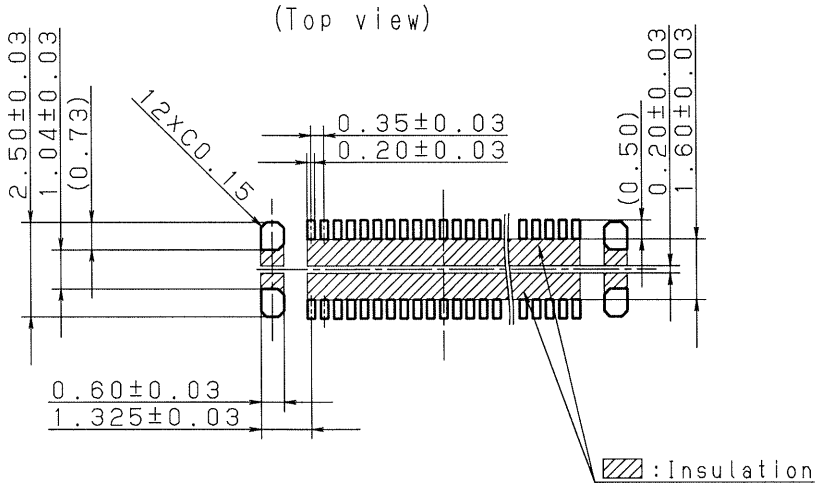

Note 1)
Please contact us when the metal mask pattern size in this drawing are changed because it might affect to soldering performance.

Window ratio is calculated by dividing window size of metalmasking by the original mounting pad.

Sym	Item or Code No	Material & Size	qt.	Process	Remark

Catalog No		Drawing Name	
Name	Narrow-pitch connector A35US Socket	Drawing No	AXG7-SM-006
Remark		Scale 5 : 1	Unit: mm / Date Aug.04,'15
Drawn		Reviewed	Panasonic Corporation
Designed		Approved	
Checked			

(3rd Angle System) (JIS A-4)

Recommended metal mask pattern

Metal mask thickness: When 100μm
(Signal terminal opening ratio:70%)
(Power terminal opening ratio:77%)

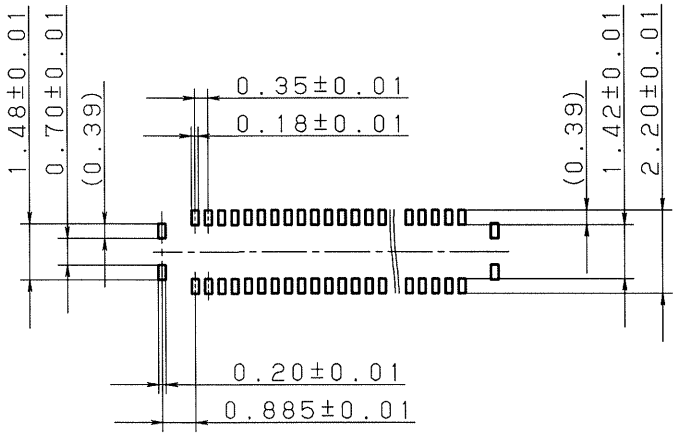

《Reference》
Recommended PC board pattern (mounting pad layout)
(Top view)

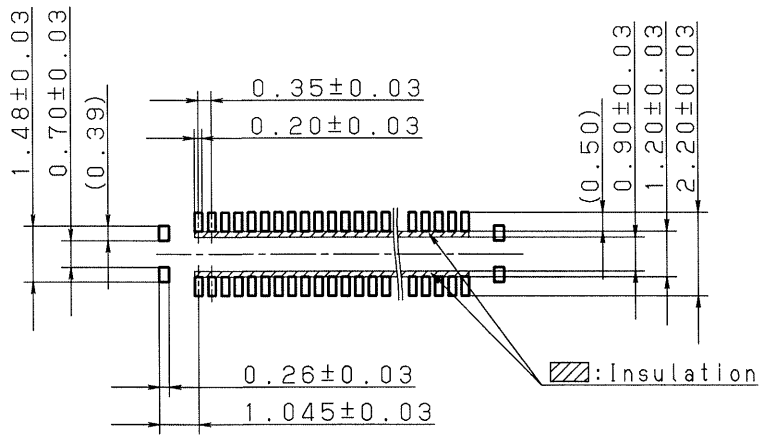

Window ratio is calculated by dividing window size of metalmasking by the original mounting pad.

Sym	Item or Code No	Material & Size	qt.	Process	Remark
Catalog No			Drawing Name		
Name Narrow-pitch connector A35US Header			Drawing No AXG8-SM-002		
Remark			Scale 5:1	Unit: mm	Date Apr.01.'15
Drawn		Reviewed	Panasonic Corporation		
Designed		Approved			
Checked					

(3rd Angle System) (JIS A-4)

Tape packed status (JIS C 0806-3:1999)

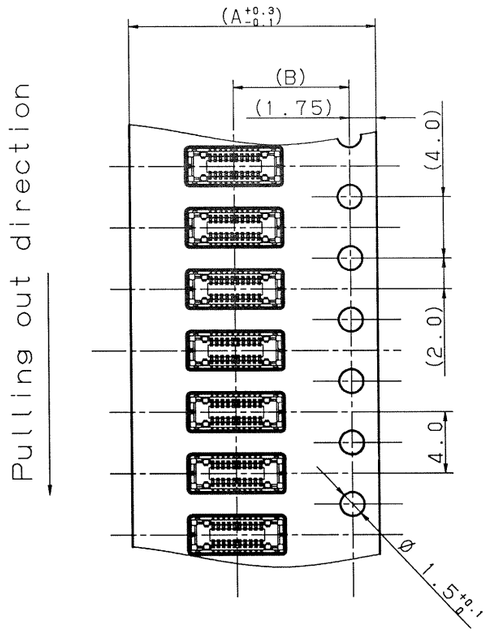

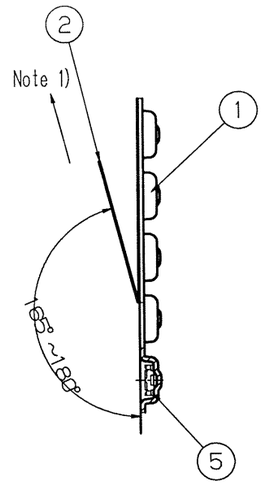

Dimension / No. of contacts	A	B	C
Max:30	16.0	7.5	17.4
34~60	24.0	11.5	25.4

Carton containing 2 reels

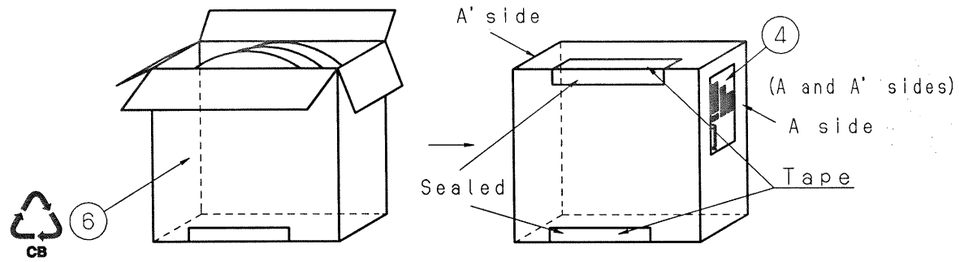

Label attached

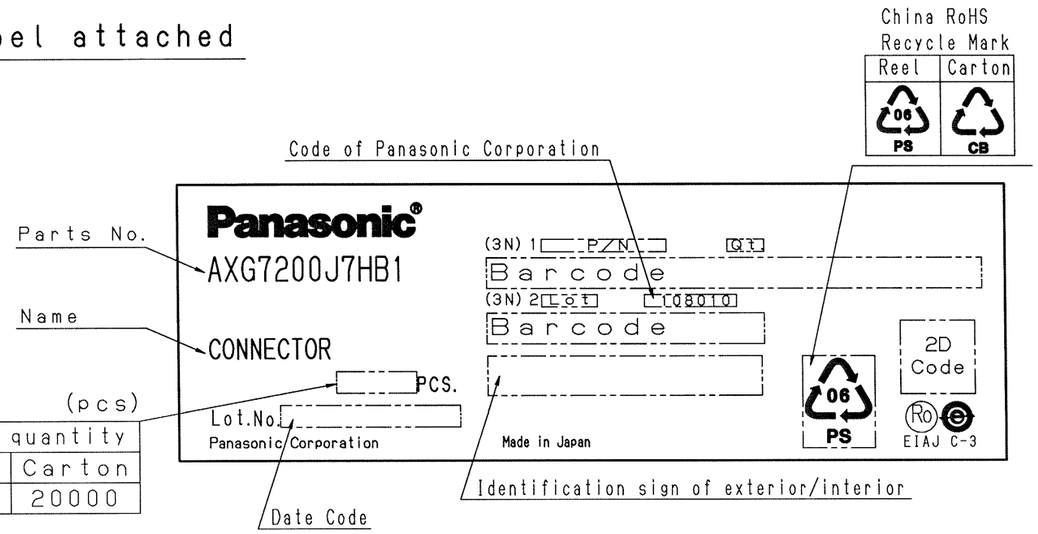

Packing quantity	
Reel	Carton
10000	20000

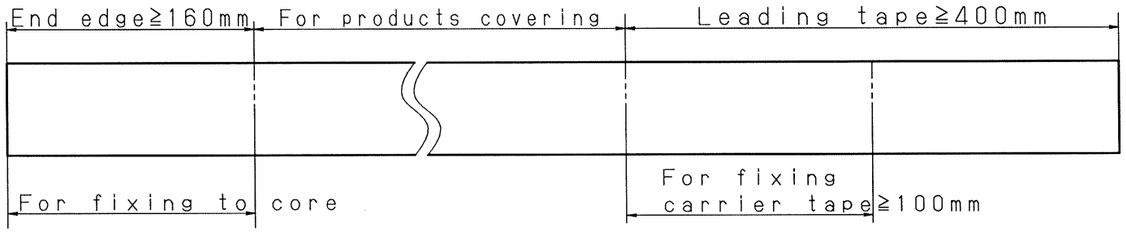

Reel Package (EIAJ ET-7200B)

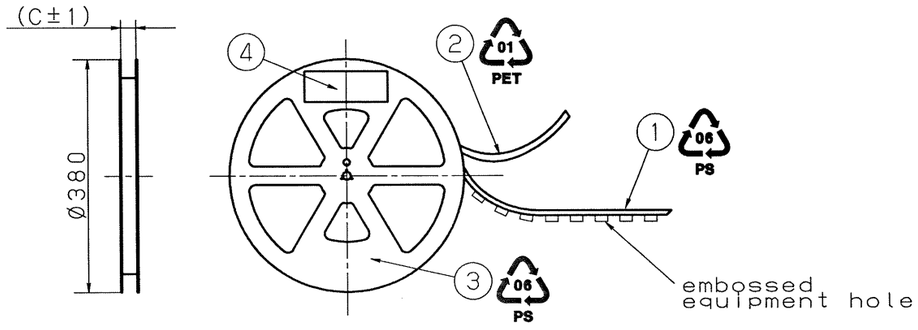

2) The beginning of the carrier tape and the end edge is fixed by taping up.

Note 1) In case of stripping off the cover tape, the tape itself must not be torn.

Sym	Item or Code No	Material & Size	qt.	Process	Remark
6	Carton	Corrugated fiberboard			
5	Narrow-pitch connectors				
4	Label	Coat Paper			
3	Reel	PS			Color : Black
2	Cover tape	PET			
1	Embossed Carrier tape	PS			

Catalog No		Drawing Name	Embossed tape packaging
Name	Narrow-pitch connectors A35US socket with power terminal	Drawing No	AXG7200J7HB1H
Remark	To:Longcheer Technology Co,. Ltd	Scale — / Unit: mm	Date Sep.22,'14
Drawn A. Kawaguchi	Reviewed	Panasonic Corporation	
Designed Y. Minai	Approved K. Ohshita		
Checked H. Ueda			

(3rd Angle System) (JIS A-3)

Tape packed status (JIS C 0806-3:1999)

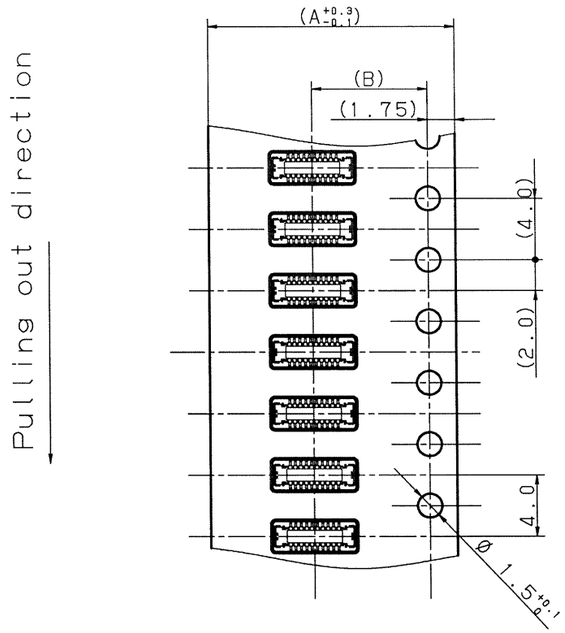

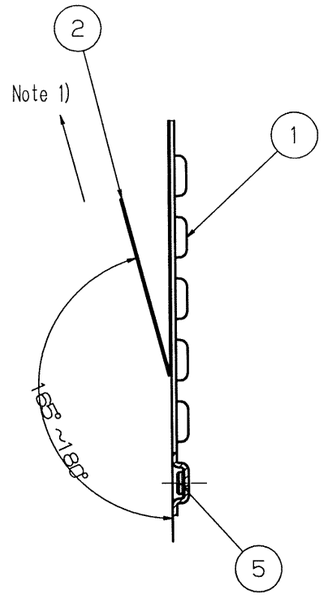

Dimension / No. of contacts	A	B	C
Max:34	16.0	7.5	17.4
40~60	24.0	11.5	25.4

Carton containing 2 reels

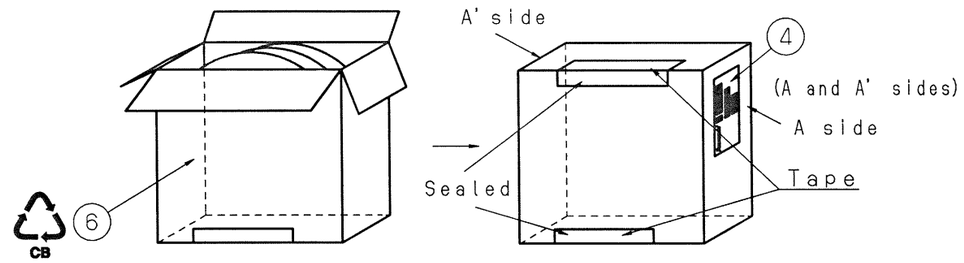

Label attached

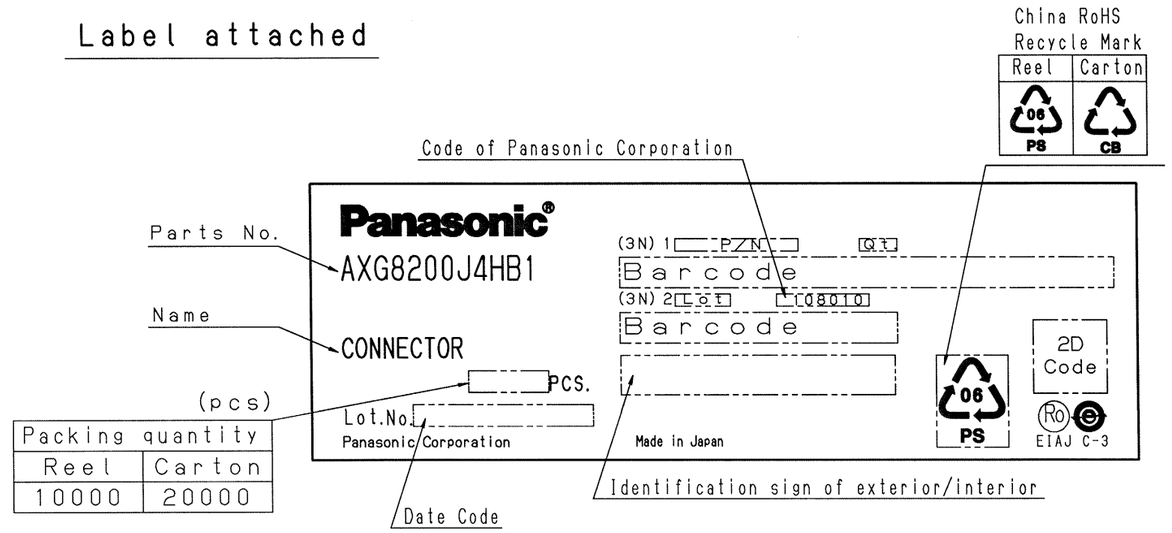

Packing quantity	
Reel	Carton
10000	20000

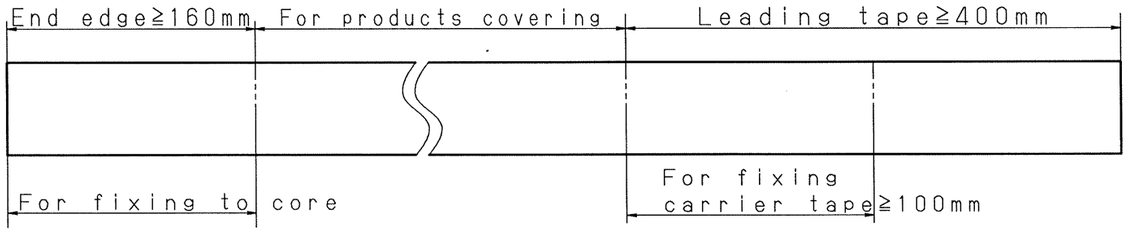

Reel Package (EIAJ ET-7200B)

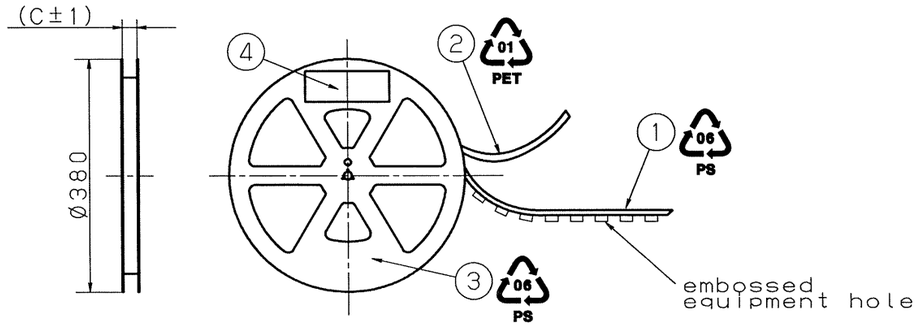

2) The beginning of the carrier tape and the end edge is fixed by tapeing up.

Note 1) In case of stripping off the cover tape, the tape itself must not be torn.

Sym	Item or Code No	Material & Size	qt.	Process	Remark
6	Carton	Corrugated fiberboard			
5	Narrow-pitch connectors				
4	Label	Coat Paper			
3	Reel	PS			Color : Black
2	Cover tape	PET			
1	Embossed Carrier tape	PS			

Catalog No		Drawing Name	Embossed tape packaging
Name	Narrow-pitch connectors A35US header with power terminal	Drawing No	AXG8200J4HB1H
Remark	To:Longcheer Technology Co,. Ltd	Scale — / Unit: mm	Date Sep.22,'14
Drawn A. Kawaguchi	Reviewed	Panasonic Corporation	
Designed Y. Minai	Approved K. Yoshikawa		
Checked H. Ueda			

(3rd Angle System) (JIS A-3)