客 户 For Customer		客户料号		承认签名		承认日期	

VER.	SYMBOL	REVISION RECORD	DRAWN BY	CHECKED BY
V0	△	Preliminary Specification Release	18.06.13	

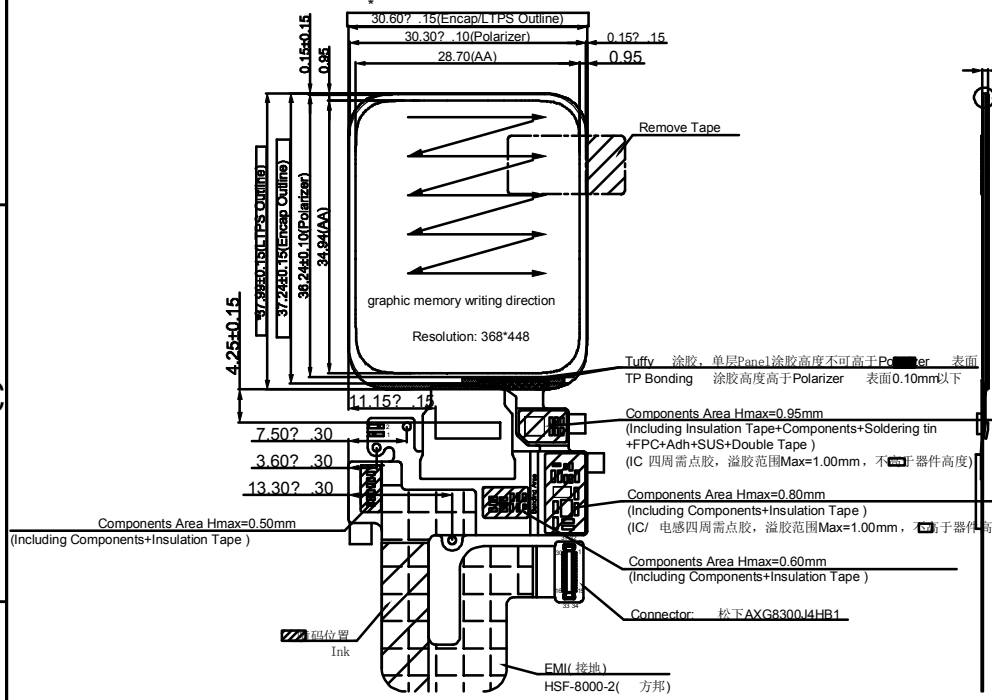

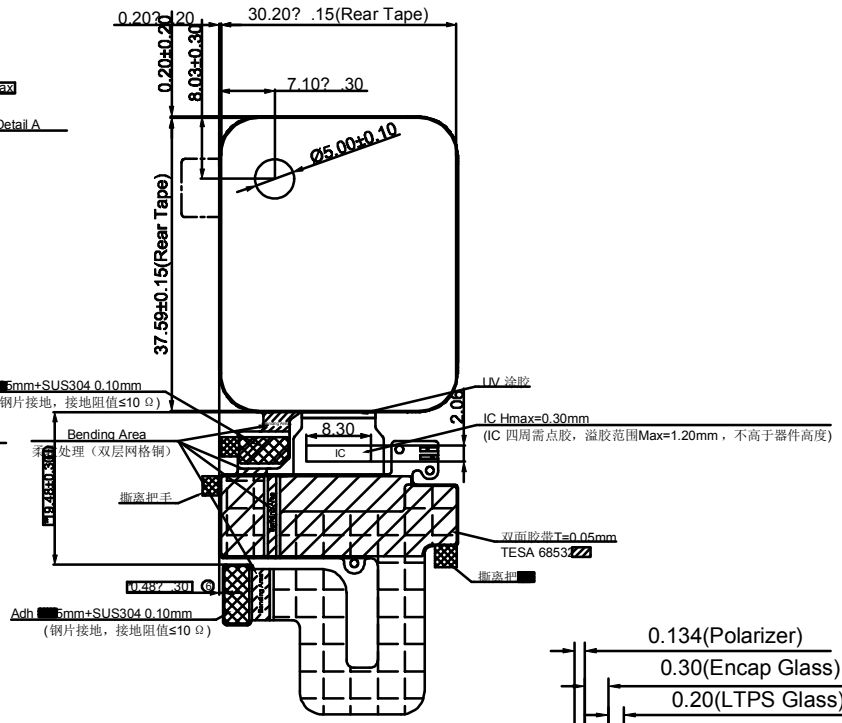

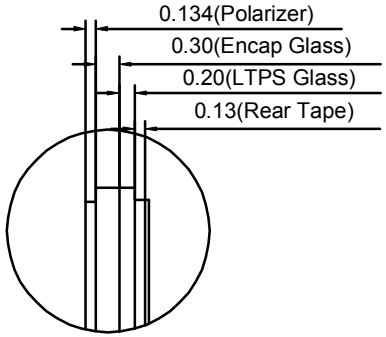

Detail A Scale 10:1

CN1(DISPLAY MODULE)	
NO.	Symbol
1	VCI_EN
2	GND
3	TP_12C_SDA
4	TP_12C_SCL
5	NC(TP_SWDIO)
6	TP_RST
7	TP_INT
8	TP_VDD(2.8V)
9	GND
10	LCD_RST
11	LCD_TE
12	GND
13	VIO18(1.8V)
14	VIO18(1.8V)
15	NC(VPP)
16	NFC_ANT2
17	NFC_ANT1
18	GND
19	SPI_SDO
20	SPI_SDI
21	SPI_DCX
22	SPI_CLK
23	SPI_CS
24	GND
25	MIPI_CLKP
26	MIPI_CLKN
27	GND
28	MIPI_DOP
29	MIPI_DON
30	GND
31	VPH_PWR(3.8V)
32	VPH_PWR(3.8V)
33	GND
34	GND

Notes :
1. Display Typel: 1.78" 368*448 AMOLED Display(On Cell);
2. General Tolerance: ? .20;
3. Driver IC: RM69090(带RAM);Touch IC: TMA525C-34FNI24ZZ(T);Power IC: DAZ20012;
   ID: DA(00); DB(80); DC(00);
4. AMOLED 平整度: ＜0.25mm;
5. MIPI信号的Line数量及Lansel接法: 1 Lane;无交叉;
6. MIPI匹配阻抗: 100±10Ω;
7. Brightness: Min 315 nits/Type 350 nits;
8. Brightness uniformity: Min 80%/Type 85%;
9. Color coordinate(White): X(0.30? .02)/Y(0.31? .02);
10. CR/NTSC/View angle: CR(Min 10000/Type 100000);
    NTSC(Min 90%/Type 105%);
    View angle(Top/Bottom/Left/Right CR ratio≥1000,Min 80°)
11. Operating temperature: -20癈 ~70癈
    Storage temperature: -30癈 ~80癈
12. Check Marks :①-⑥;
13. *:Criticaldimension,CPK should be ≥1.33(DVT Stage);
14. Requirements on environment protection:ROHS&Haloge free;
15. Non-marked dimension refer to CAD file and general tolerance.

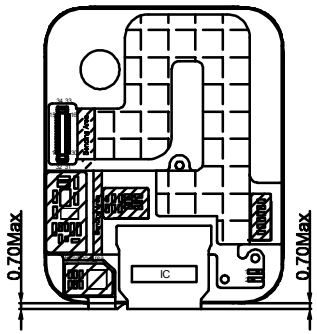

FPC弯折示意图

深圳市拓淘电子科技有限公司
ShenzhenToppop Electronic Co.,Ltd

TITLE: LCM OUTLINE DIMENSION		PRODUCT MODEL: TT178ERC10B	
DRW.NO: TT-LCM178ERN10A		Ver.: V0	SCALE : N.T.S.
DRAWN BY	DATE		UNIT : mm
CHECKED BY	DATE		PRO.(3):
APPROVED BY	DATE		SHEET : 1/1