SERVICE MANUAL

PB50RF(-G) / PB51RF(-G)

notebook

Notebook Computer

PB50RF(-G) / PB51RF(-G)

Service Manual

Notice

The company reserves the right to revise this publication or to change its contents without notice. Information contained herein is for reference only and does not constitute a commitment on the part of the manufacturer or any subsequent vendor. They assume no responsibility or liability for any errors or inaccuracies that may appear in this publication nor are they in anyway responsible for any loss or damage resulting from the use (or misuse) of this publication.

This publication and any accompanying software may not, in whole or in part, be reproduced, translated, transmitted or reduced to any machine readable form without prior consent from the vendor, manufacturer or creators of this publication, except for copies kept by the user for backup purposes.

Brand and product names mentioned in this publication may or may not be copyrights and/or registered trademarks of their respective companies. They are mentioned for identification purposes only and are not intended as an endorsement of that product or its manufacturer.

Version 1.0
June 2019

Trademarks

Intel and Intel Core are trademarks of Intel Corporation.
Windows® is a registered trademark of Microsoft Corporation.
Other brand and product names are trademarks and /or registered trademarks of their respective companies.

HDMI™
HIGH-DEFINITION MULTIMEDIA INTERFACE

About this Manual

This manual is intended for service personnel who have completed sufficient training to undertake the maintenance and inspection of personal computers.

It is organized to allow you to look up basic information for servicing and/or upgrading components of the ***PB50RF(-G) / PB51RF(-G)*** series notebook PC.

The following information is included:

Chapter 1, Introduction, provides general information about the location of system elements and their specifications.
Chapter 2, Disassembly, provides step-by-step instructions for disassembling parts and subsystems and how to upgrade elements of the system.

Appendix A, Part Lists
Appendix B, Schematic Diagrams

IMPORTANT SAFETY INSTRUCTIONS

Follow basic safety precautions, including those listed below, to reduce the risk of fire, electric shock and injury to persons when using any electrical equipment:

1. Do not use this product near water, for example near a bath tub, wash bowl, kitchen sink or laundry tub, in a wet basement or near a swimming pool.
2. Avoid using a telephone (other than a cordless type) during an electrical storm. There may be a remote risk of electrical shock from lightning.
3. Do not use the telephone to report a gas leak in the vicinity of the leak.
4. Use only the power cord and batteries indicated in this manual. Do not dispose of batteries in a fire. They may explode. Check with local codes for possible special disposal instructions.
5. This product is intended to be supplied by a Listed Power Unit as follows:

- AC Input of 100 - 240V, 50 - 60Hz, DC Output of 19.5V, 11.8A (**230** Watts) minimum AC/DC Adapter.

FCC Statement

This device complies with Part 15 of the FCC Rules. Operation is subject to the following two conditions:
This device may not cause harmful interference.
This device must accept any interference received, including interference that may cause undesired operation.

Instructions for Care and Operation

The notebook computer is quite rugged, but it can be damaged. To prevent this, follow these suggestions:

1. **Don't drop it, or expose it to shock.** If the computer falls, the case and the components could be damaged.

Do not expose the computer to any shock or vibration. 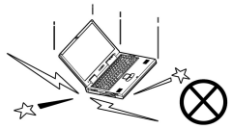	*Do not place it on an unstable surface.* 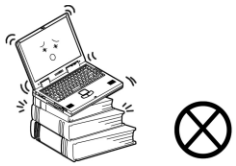	*Do not place anything heavy on the computer.* 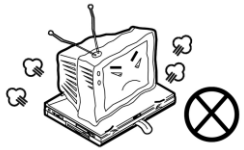

2. **Keep it dry, and don't overheat it.** Keep the computer and power supply away from any kind of heating element. This is an electrical appliance. If water or any other liquid gets into it, the computer could be badly damaged.

Do not expose it to excessive heat or direct sunlight.	*Do not leave it in a place where foreign matter or moisture may affect the system.*	*Don't use or store the computer in a humid environment.* 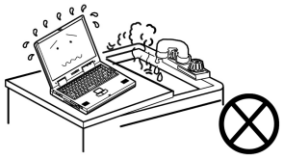	*Do not place the computer on any surface which will block the vents.* 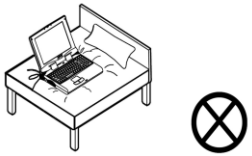

3. **Follow the proper working procedures for the computer**. Shut the computer down properly and don't forget to save your work. Remember to periodically save your data as data may be lost if the battery is depleted.

Do not turn off the power until you properly shut down all programs. 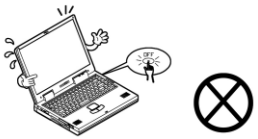	*Do not turn off any peripheral devices when the computer is on.* 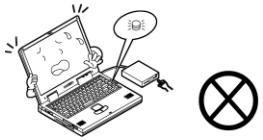	*Do not disassemble the computer by yourself.*	*Perform routine maintenance on your computer.*

4. **Avoid interference.** Keep the computer away from high capacity transformers, electric motors, and other strong magnetic fields. These can hinder proper performance and damage your data.
5. **Take care when using peripheral devices**.

Use only approved brands of peripherals. 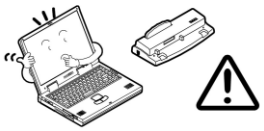	*Unplug the power cord before attaching peripheral devices.* 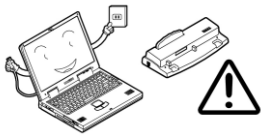

Power Safety

The computer has specific power requirements:

- Only use a power adapter approved for use with this computer.
- Your AC adapter may be designed for international travel but it still requires a steady, uninterrupted power supply. If you are unsure of your local power specifications, consult your service representative or local power company.
- The power adapter may have either a 2-prong or a 3-prong grounded plug. The third prong is an important safety feature; do not defeat its purpose. If you do not have access to a compatible outlet, have a qualified electrician install one.
- When you want to unplug the power cord, be sure to disconnect it by the plug head, not by its wire.
- Make sure the socket and any extension cord(s) you use can support the total current load of all the connected devices.
- Before cleaning the computer, make sure it is disconnected from any external power supplies.

Power Safety Warning

Before you undertake any upgrade procedures, make sure that you have turned off the power, and disconnected all peripherals and cables (including telephone lines and power cord). It is advisable to also remove your battery in order to prevent accidentally turning the machine on.

Do not plug in the power cord if you are wet.	*Do not use the power cord if it is broken.* 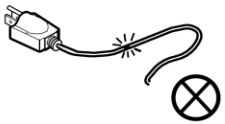	*Do not place heavy objects on the power cord.* 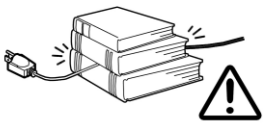

Battery Precautions

- Only use batteries designed for this computer. The wrong battery type may explode, leak or damage the computer.
- Do not continue to use a battery that has been dropped, or that appears damaged (e.g. bent or twisted) in any way. Even if the computer continues to work with a damaged battery in place, it may cause circuit damage, which may possibly result in fire.
- Recharge the batteries using the notebook's system. Incorrect recharging may make the battery explode.
- Do not try to repair a battery pack. Refer any battery pack repair or replacement to your service representative or qualified service personnel.
- Keep children away from, and promptly dispose of a damaged battery. Always dispose of batteries carefully. Batteries may explode or leak if exposed to fire, or improperly handled or discarded.
- Keep the battery away from metal appliances.
- Affix tape to the battery contacts before disposing of the battery.
- Do not touch the battery contacts with your hands or metal objects.

Battery Guidelines

The following can also apply to any backup batteries you may have.

- If you do not use the battery for an extended period, then remove the battery from the computer for storage.
- Before removing the battery for storage charge it to 60% - 70%.
- Check stored batteries at least every 3 months and charge them to 60% - 70%.

Battery Disposal

The product that you have purchased contains a rechargeable battery. The battery is recyclable. At the end of its useful life, under various state and local laws, it may be illegal to dispose of this battery into the municipal waste stream. Check with your local solid waste officials for details in your area for recycling options or proper disposal.

Caution

Danger of explosion if battery is incorrectly replaced. Replace only with the same or equivalent type recommended by the manufacturer. Discard used battery according to the manufacturer's instructions.

Battery Level

Click the battery icon in the taskbar to see the current battery level and charge status. A battery that drops below a level of 10% will not allow the computer to boot up. Make sure that any battery that drops below 10% is recharged within one week.

Related Documents

You may also need to consult the following manual for additional information:

User's Manual on CD/DVD

This describes the notebook PC's features and the procedures for operating the computer and its ROM-based setup program. It also describes the installation and operation of the utility programs provided with the notebook PC.

System Startup

1. Remove all packing materials.
2. Place the computer on a stable surface.
3. Insert the battery and make sure it is locked in position.
4. Securely attach any peripherals you want to use with the computer (e.g. keyboard and mouse) to their ports.
5. **When first setting up the computer use the following procedure** (as to safeguard the computer during shipping, the battery will be locked to not power the system until first connected to the AC/DC adapter and initially set up as below):
   - Attach the AC/DC adapter cord to the DC-In jack on the left of the computer, then plug the AC power cord into an outlet, and connect the AC power cord to the AC/DC adapter and **leave it there for 6 seconds or longer**.
   - Remove the adapter cord from the computer's DC-In jack, and then plug it back in again; the battery will now be unlocked.
6. Use one hand to raise the lid/LCD to a comfortable viewing angle (do not exceed 130 degrees); use the other hand (as illustrated in Figure 1) to support the base of the computer (**Note**: **Never** lift the computer by the lid/LCD).
7. Press the power button to turn the computer "on".

Figure 1
Opening the Lid/LCD/ Computer with AC/DC Adapter Plugged-In

Shut Down

Note that you should always shut your computer down by choosing the **Shut down** command in ***Windows*** (see below). This will help prevent hard disk or system problems.

1. Click the Start Menu icon .
2. Click the **Power** item .
3. Choose **Shut Down** from the menu.

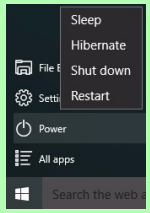

Contents

Introduction 1-1

Overview 1-1
Specifications 1-2
External Locator - Top View with LCD Panel Open 1-4
External Locator - Front & Right Side Views 1-5
External Locator - Left Side & Rear View 1-6
External Locator - Bottom View 1-7
Mainboard Overview - Top (Key Parts) 1-8
Mainboard Overview - Bottom (Key Parts) 1-9
Mainboard Overview - Top (Connectors) 1-10
Mainboard Overview - Bottom (Connectors) 1-11

Disassembly 2-1

Overview 2-1
Maintenance Tools 2-2
Connections 2-2
Maintenance Precautions 2-3
Disassembly Steps 2-4
Removing the Battery 2-5
Removing the Keyboard 2-6
Removing the Hard Disk Drive 2-7
Removing the System Memory (RAM) 2-9
Removing the M.2 SSD Module 2-10
Removing the Wireless LAN Module 2-11
Wireless LAN, Combo Module Cables 2-12
Removing the CCD 2-13

Part Lists A-1

Part List Illustration Location A-2
Top A-3
Bottom A-4
Main Board A-5
HDD A-6
LCD A-7

Schematic Diagrams.....B-1

System Block Diagram B-2
Processor 1/6 .....B-3
Processor 2/6 .....B-4
Processor 3/6 .....B-5
Processor 4/6 .....B-6
Processor 5/6 .....B-7
Processor 6/6 .....B-8
DDR4 CHA SO-DIMM_0 .....B-9
DDR4 CHB SO-DIMM_0 .....B-10
Panel B-11
HDMI B-12
Mini DP Port B-13
PS8330B B-14
PS8331 .....B-15
GPU 1/6 .....B-16
GPU 2/6 .....B-17
Frame Buffer Partition A B-18
Frame Buffer Partition A B-19
Frame Buffer Partition B B-20
Frame Buffer Partition B B-21
GPU 3/6 .....B-22
Frame Buffer Partition C B-23
Frame Buffer Partition C B-24
Frame Buffer Partition D B-25
Frame Buffer Partition D B-26
GPU 4/6 .....B-27

GPU 5/6 ..... B-28
IFP I/O Interface B-29
GPU 6/6 ..... B-30
GPU NVVDD, FBVDDQ B-31
GPU GND B-32
GPU Decoupling B-33
GPU Decoupling 2 ..... B-34
GPU Pwr Ctrl, Level Shift B-35
PCH 1/9 ..... B-36
PCH 2/9 ..... B-37
PCH 3/9 ..... B-38
PCH 4/9 ..... B-39
PCH 5/9 ..... B-40
PCH 6/9 ..... B-41
PCH 7/9 ..... B-42
PCH 8/9 ..... B-43
PCH 9/9 ..... B-44
HDD Port B-45
M.2 WLAN+BT B-46
M.2 PCIEX4 SATA B-47
CCD, FP B-48
USB B-49
USB Redriver B-50
ANX7440 ..... B-51
USB+DP Type-C B-52
TPM B-53
LAN RTL8111H B-54
ALC1220 ..... B-55
EC ITE8587 ..... B-56
Fan, TP, Smart AMP PWR B-57
LED Keyboard Ctrl B-58
LID B-59
TR-TBT B-60
AR_TBT_SP PWR B-61
TPS65987 ..... B-62
TBT/Type C B-63
Conn_to Extend Board B-64
3.3VA, 3.3V, 3.3VS, 5VS B-65
PWR_SW VCCST, STG, SFR_OC B-66
PWR_SW 1V8_AON, RUN B-67
VDD3, VDD5 ..... B-68
DDR 1.2V, 0.6VS, 2.5V B-69
1.8VA, 1.05VA B-70
VCCIO B-71
VCore, VCCGT, VCCSA B-72
VCore Output Stage B-73
VCCGT, VCCSA B-74
NVVDD 1 & 2 ..... B-75
NVVDD 3 ..... B-76
PEX_VDD B-77
FBVDDQ B-78
AC-In, Charger B-79
LED Board B-80
Power Board B-81
HDD Board B-82
Audio Board, Fan B-83
Audio Board_USB B-84
Audio Board_AMP, Jack B-85
Per Key Board B-86
RTS5250 ..... B-87
AMP TPA2008D2 ..... B-88
Subwoofer B-89
Smart AMP B-90
Smart AMP for Subwoofer B-91

Speaker Con B-92

Chapter 1: Introduction

Overview

This manual covers the information you need to service or upgrade the ***PB50RF(-G) / PB51RF(-G)*** series notebook computer. Information about operating the computer (e.g. getting started, and the *Setup* utility) is in the *User's Manual*. Information about dri-vers (e.g. VGA & audio) is also found in the *User's Manual*. The manual is shipped with the computer.

Operating systems (e.g. *Windows 10*, etc.) have their own manuals as do application softwares (e.g. word processing and database programs). If you have questions about those programs, you should consult those manuals.

The ***PB50RF(-G) / PB51RF(-G)*** series notebook is designed to be upgradeable. See ***Disassembly on page 2 - 1*** for a detailed description of the upgrade procedures for each specific component. Please take note of the warning and safety information indicated by the "" symbol.

The balance of this chapter reviews the computer's technical specifications and features.

Specifications

Latest Specification Information

The specifications listed here are correct at the time of sending them to the press. Certain items (particularly processor types/speeds) may be changed, delayed or updated due to the manufacturer's release schedule. Check with your service center for more details.

CPU Speed & Computer in DC Mode

Note that when the computer is in DC mode (powered by the battery only) the CPU may not run at full speed. This is a design feature implemented in order to protect the battery.

Processor Options

i9-9980HK (2.40GHz)

16MB Smart Cache, **14nm**, DDR4-2666MHz, TDP 45W

i7-9750H (2.60GHz)

12MB Smart Cache, **14nm**, DDR4-2666MHz, TDP 45W

Core Logic

Intel® HM370 Express Chipset

LCD Options

15.6" (39.62cm), 16:9, UHD (3840x2160)/FHD (1920x1080)

BIOS

128Mb SPI Flash ROM

INSYDE BIOS

Memory

Dual Channel DDR4

Two 260 Pin SO-DIMM Sockets

Supporting **DDR4 2666MHz** Memory Modules

Memory Expandable from **8GB** (**minimum**) up to **64GB** (**maximum**)

Compatible with 4GB, 8GB, 16GB or 32GB Modules

(The real memory operating frequency depends on the FSB of the processor.)

Supports XMP 3000MHz (XMP is processor dependent)

Security

Security (Kensington® Type) Lock Slot

BIOS Password

Intel PTT for Systems Without TPM Hardware

(**Factory Option**) TPM 2.0

(**Factory Option**) Fingerprint Sensor

Video Adapter Options

Microsoft Hybrid Graphics Mode or Discrete Graphics Mode

Supports up to 4 Active Displays

Supports NVIDIA Surround View via HDMI x 1, MiniDP x1 and Display Port over Type-C

Intel Integrated GPU

Intel® UHD Graphics 630

Dynamic Frequency

Intel Dynamic Video Memory Technology

Microsoft DirectX®12 Compatible

NVIDIA® Discrete GPU

NVIDIA® GeForce RTX 2070

8GB GDDR6 Video RAM

Microsoft DirectX®12 Compatible

Pointing Device

(**Factory Option**) Built-in Touchpad/Secure Pad (with Microsoft PTP Multi Gesture & Scrolling Functionality)

Keyboard

Full Size **Multi Full Color** LED Keyboard (with numeric keypad)

Or

(**Factory Option**) Full Size **Full Color "Per Key"** LED Keyboard (with numeric keypad)

Storage

One changeable 2.5" (6cm) **7.0mm (h) SATA** (Serial) Hard Disk Drive/Solid State Drive (SSD)

(**Factory Option**) **Two** M.2 **PCIe Gen3 x4** Solid State Drive (SSD) (RAID 0/1) or **One** M.2 **SATA** Solid State Drive (SSD) Interface

Audio

High Definition Audio Compliant Interface
S/PDIF Digital Output
Built-In Array Microphone
Two Speakers
Sound BlasterX® Pro-Gaming 360°

Communication

1.0M HD PC Camera Module
Built-In 10/100/1000Mb Base-TX Ethernet LAN

WLAN/ Bluetooth M.2 Modules:

(**Factory Option**) Intel® Dual Band Wireless-AC 9260 Wireless LAN (**802.11ac**) + Bluetooth
(**Factory Option**) Intel® Dual Band Wireless-AC 9560 Wireless LAN (**802.11ac**) + Bluetooth
(**Factory Option**) Intel® Dual Band Wireless-AC 9462 Wireless LAN (**802.11ac**) + Bluetooth
(**Factory Option**) Qualcomm® Atheros Killer™ Wireless-AC 1550i Wireless LAN (**802.11ac**) + Bluetooth

Card Reader

Embedded Multi-In-1 Push-Push Card Reader
MMC (MultiMedia Card) / RS MMC
SD (Secure Digital) / Mini SD / SDHC/ SDXC

M.2 Slots

Slot 1 for **Combo WLAN and Bluetooth** Module
Slot 2 for **SATA** or **PCIe Gen3 x4 SSD**
Slot 3 for **PCIe Gen3 x4 SSD**

Interface

One USB 3.1 Gen 2 Type-C Port*
**The maximum amount of current supplied by USB Type-C ports is 500mA (USB 2.0)/900mA (USB 3.1).*
Or
(**Factory Option**) One Thunderbolt 3 Port**
***The maximum amount of current supplied by Thunderbolt 3 port is 3000mA.*

Three USB 3.0 (USB 3.1 Gen 1) Type-A Ports (Including one AC/DC Powered USB Port)
One DisplayPort 1.3 over USB 3.1 Gen 2 Type-C Port
One Mini DisplayPort 1.3
One HDMI-Out Port
One 2- In-1 Audio Jack (Microphone and S/PDIF Optical)
One 2- In-1 Audio Jack (Headphone and Microphone)
One RJ-45 LAN Jack
One DC-In Jack

USB 3.1 Gen 2

Note that when a single USB device is plugged in to a USB 3.1 Gen 2 port the data transfer speed will be 10Gbps, however when two devices are plugged in to both USB 3.1 Gen 2 ports, this bandwidth will be shared between the ports.

Features

Intel® Optane™ Technology
Supports NVIDIA® G-SYNC™ Technology
(NVIDIA® G-SYNC™ Technology is supported by some LCD panels and RTX series video adapters Only)
Virtual Reality Ready
Windows® Mixed Reality Compatible
(**Factory Option**) USB Drive

Environmental Spec

Temperature
Operating: 5°C - 35°C
Non-Operating: -20°C - 60°C
Relative Humidity
Operating: 20% - 80%
Non-Operating: 10% - 90%

Power

Removable 6 Cell Smart Lithium-Ion Battery Pack, 62WH

Full Range AC/DC Adapter
AC Input: 100 - 240V, 50 - 60Hz
DC Output: 19.5V, 11.8A (**230W**)

Dimensions & Weight

359mm (w) * 258mm (d) * 29.9mm (h)
2.5kg (Barebone with 62WH Battery)

External Locator - Top View with LCD Panel Open

Figure 1
Top View

1. PC Camera
2. *PC Camera LED
   When the PC camera is in use, the LED will be illuminated.
3. Built-In Array Microphone
4. LCD
5. Power Button
6. Keyboard
7. Touchpad & Buttons
8. Fingerprint Sensor (**Optional**)

External Locator - Front & Right Side Views

FRONT VIEW

Figure 2
Front View

1. LED Indicator
2. Multi-in-1 Card Reader

RIGHT SIDE VIEW

Figure 3
Right Side View

1. USB 3.1 Gen 2 Type-C Port Or (**Factory Option**) Thunderbolt 3 Port
2. USB 3.0 (USB 3.1 Gen 1) Type-A Port
3. Vent

External Locator - Left Side & Rear View

Figure 4
Left Side View

1. Security Lock Slot
2. Vent
3. *Powered USB 3.0 (USB 3.1 Gen 1) Type-A Port
4. 2-In-1 Audio Jack (Microphone and S/PDIF Optical)
5. 2-In-1 Audio Jack (Headphone and Microphone)

LEFT SIDE VIEW

Figure 5
Rear View

1. Vent
2. RJ-45 LAN Jack
3. HDMI-Out Port
4. Mini DisplayPort 1.3
5. DisplayPort 1.3 over USB 3.1 Gen 2 Type-C Port
6. USB 3.0 (USB 3.1 Gen 1) Type-A Port
7. DC-In Jack

REAR VIEW

External Locator - Bottom View

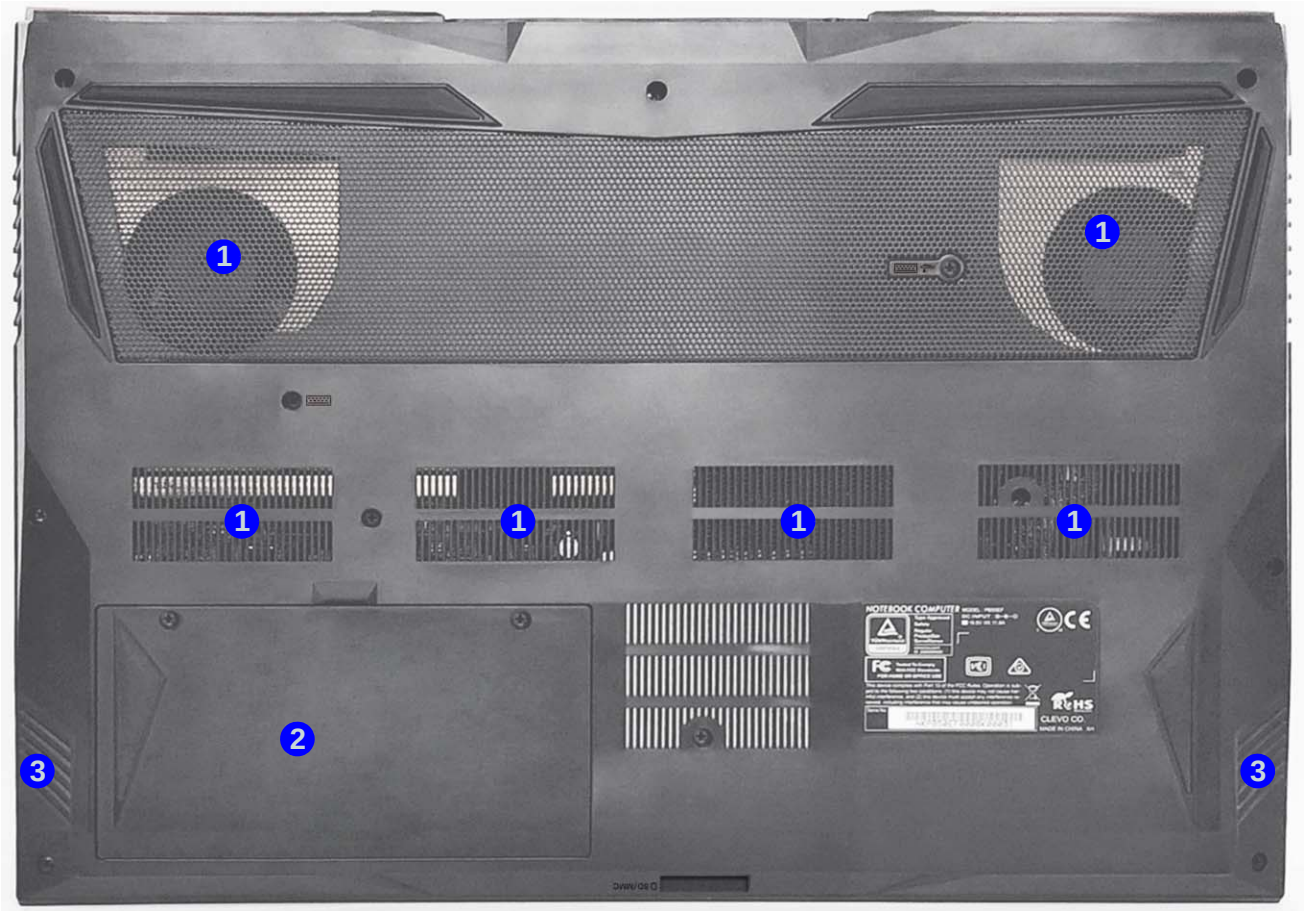

Figure 6
Bottom View

1. Vent
2. Battery
3. Speakers

Overheating

To prevent your computer from overheating, make sure nothing blocks any vent while the computer is in use.

Figure 7
Mainboard Top Key Parts

1. KBC-ITE IT8587

Mainboard Overview - Top (Key Parts)

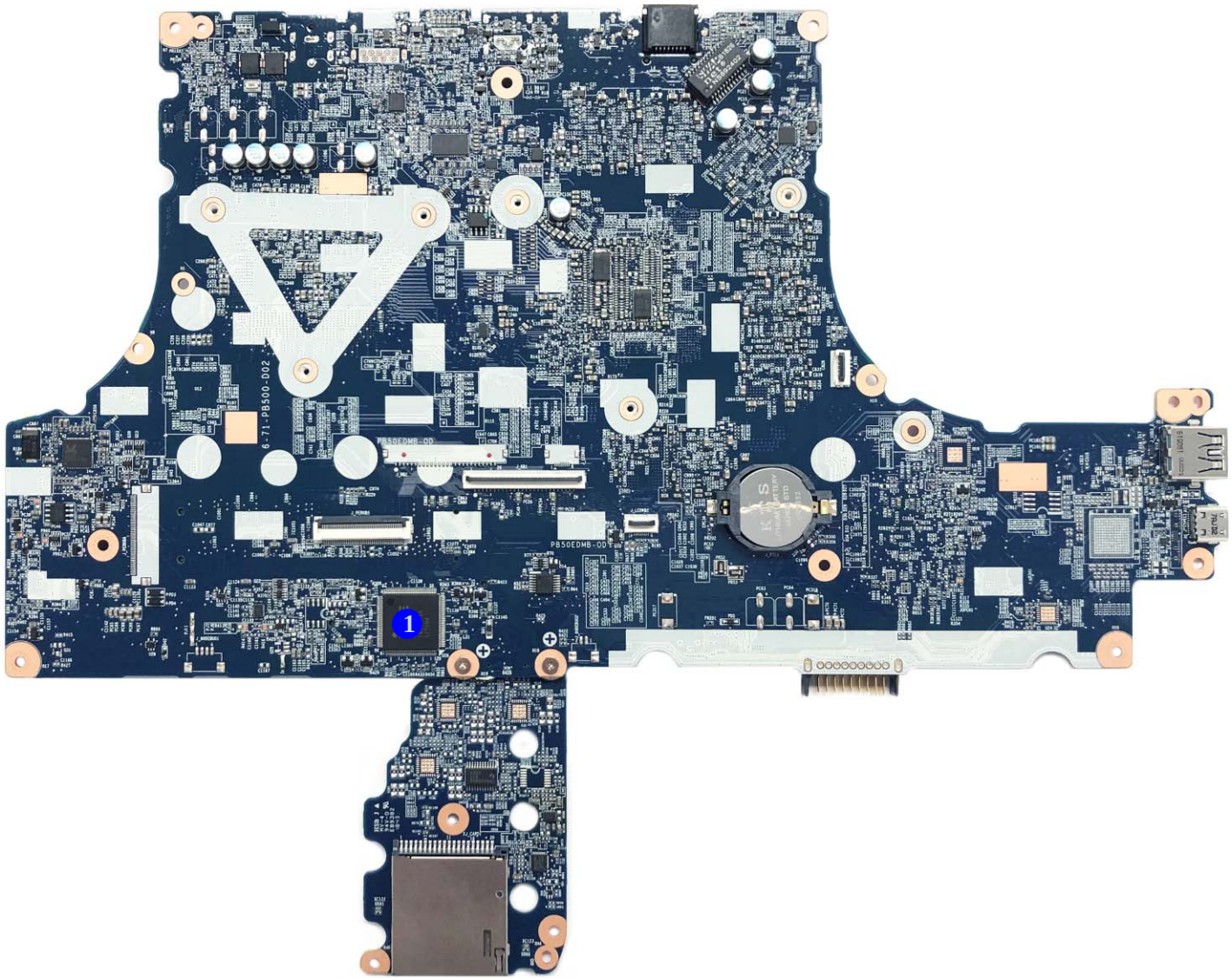

Mainboard Overview - Bottom (Key Parts)

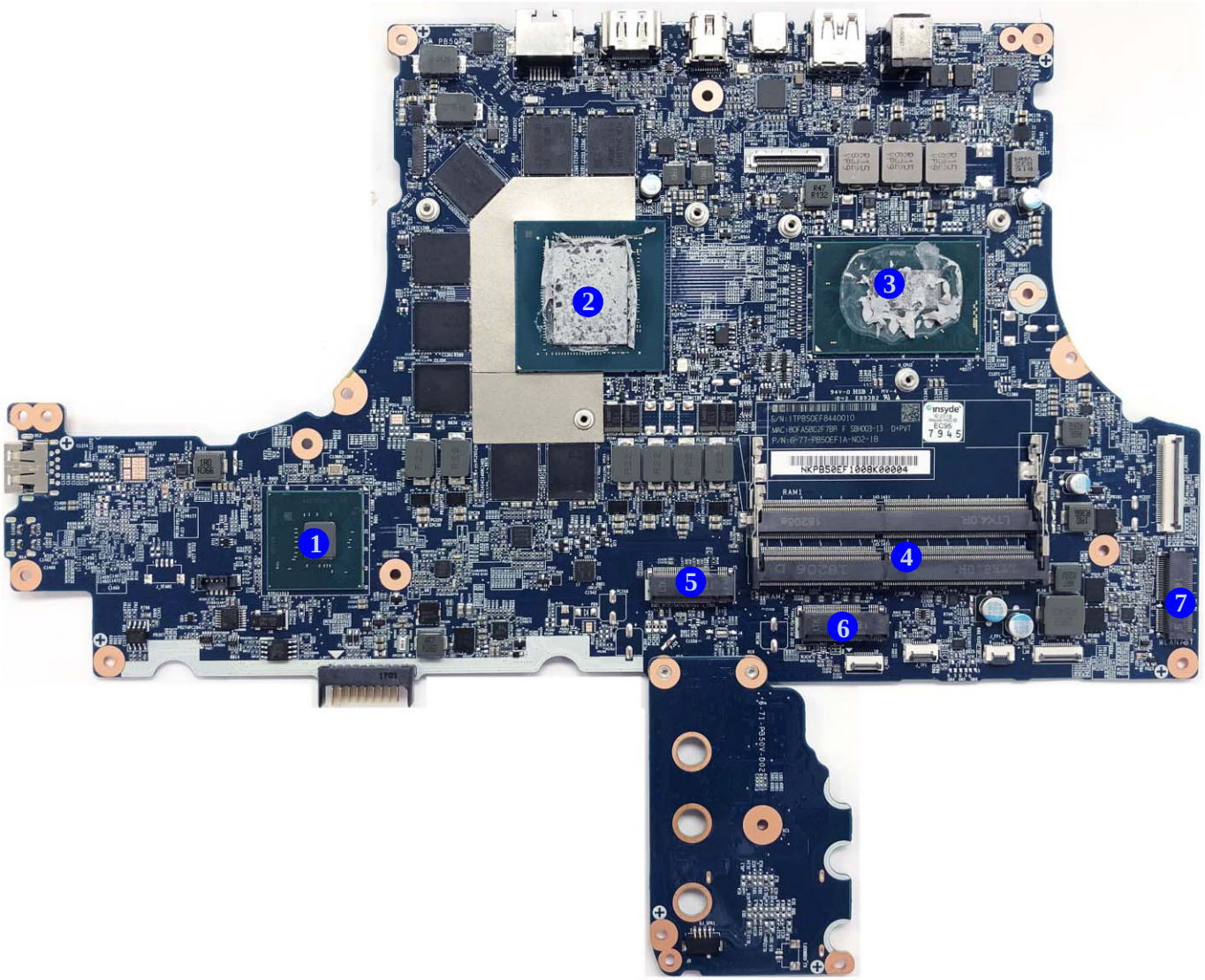

Figure 8
Mainboard Bottom Key Parts

1. PCH
2. GPU
3. CPU
4. Memory Slots DDR4 SO-DIMM
5. Mini-Card Connector (M.2 PCIE/SATA SSD Module)
6. Mini-Card Connector (M.2 PCIE Module)
7. Mini-Card Connector (WLAN Module)

Mainboard Overview - Top (Connectors)

Figure 9
Mainboard Top Connectors

1. Per Key Cable Connector
2. Keyboard Cable Connector
3. LED Keyboard Cable Connector
4. Power Switch Connector
5. Multi-in-1 Card Reader
6. USB 3.1 Gen 2 Type-C Port Or (**Factory Option**) Thunderbolt 3 Port
7. USB 3.0 (USB 3.1 Gen 1) Type-A Port

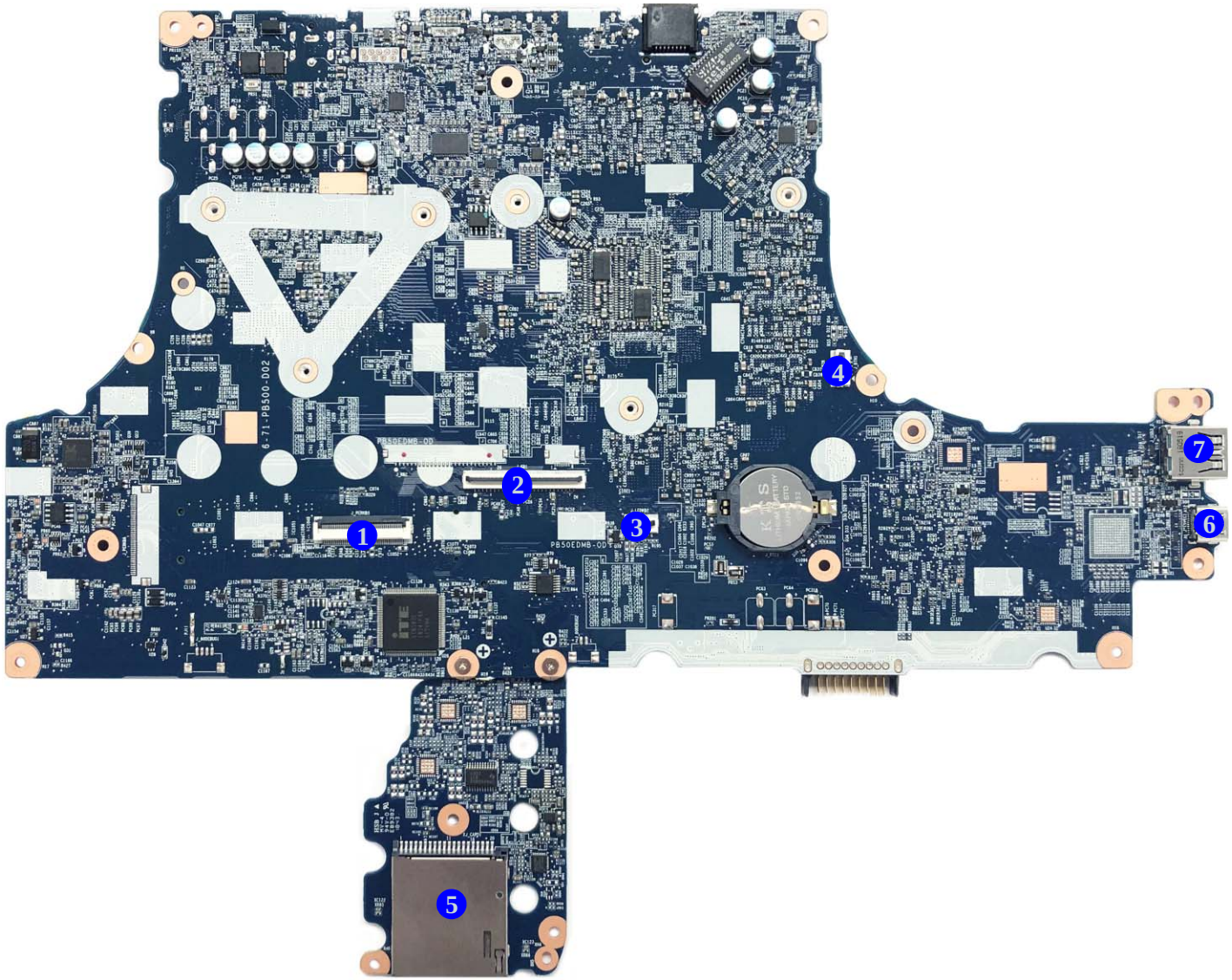

Mainboard Overview - Bottom (Connectors)

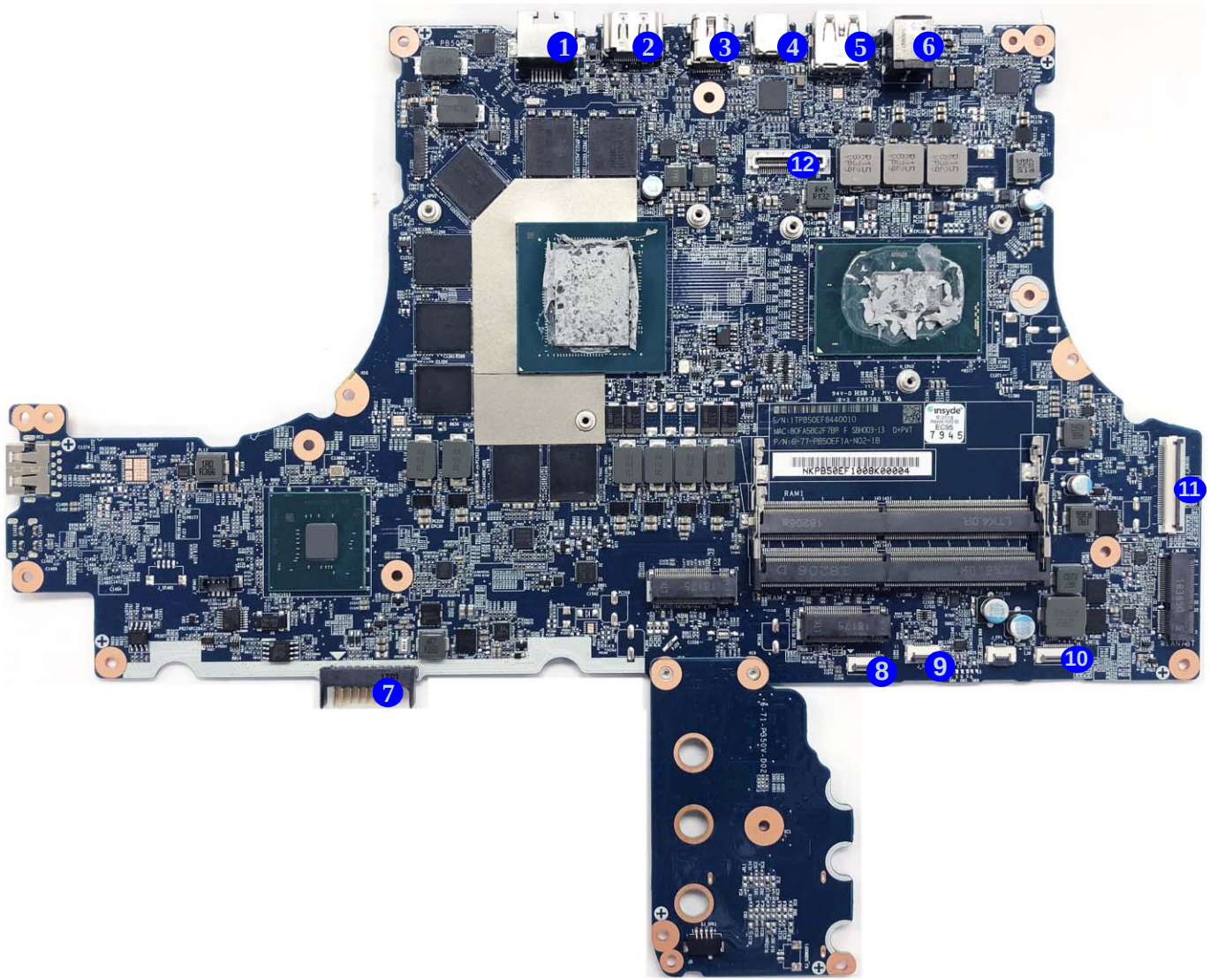

Figure 10
Mainboard Bottom Connectors

1. RJ-45 LAN Jack
2. HDMI-Out Port
3. Mini DisplayPort 1.3
4. DisplayPort 1.3 over USB 3.1 Gen 2 Type-C Port
5. USB 3.0 (USB 3.1 Gen 1) Type-A Port
6. DC-In Jack
7. Battery Connector
8. HDD Cable Connector
9. Toucpad Cable Connector
10. LED Indicator Connector
11. Audio Board Connector
12. Panel Connector

Chapter 2: Disassembly

Overview

This chapter provides step-by-step instructions for disassembling the ***PB50RF(-G) / PB51RF(-G)*** series notebook's parts and subsystems. When it comes to reassembly, reverse the procedures (unless otherwise indicated).

We suggest you completely review any procedure before you take the computer apart.

Procedures such as upgrading/replacing the RAM, optical device and hard disk are included in the User's Manual but are repeated here for your convenience.

To make the disassembly process easier each section may have a box in the page margin. Information contained under the figure # will give a synopsis of the sequence of procedures involved in the disassembly procedure. A box with a lists the relevant parts you will have after the disassembly process is complete. **Note**: The parts listed will be for the disassembly procedure listed ONLY, and not any previous disassembly step(s) required. Refer to the part list for the previous disassembly procedure. The amount of screws you should be left with will be listed here also.

A box with a will also provide any possible helpful information. A box with a contains warnings.

An example of these types of boxes are shown in the sidebar.

Information

Warning

NOTE: All disassembly procedures assume that the system is turned **OFF**, and disconnected from any power supply (the battery is removed too).

Maintenance Tools

The following tools are recommended when working on the notebook PC:

- M3 Philips-head screwdriver
- M2.5 Philips-head screwdriver (magnetized)
- M2 Philips-head screwdriver
- Small flat-head screwdriver
- Pair of needle-nose pliers
- Anti-static wrist-strap

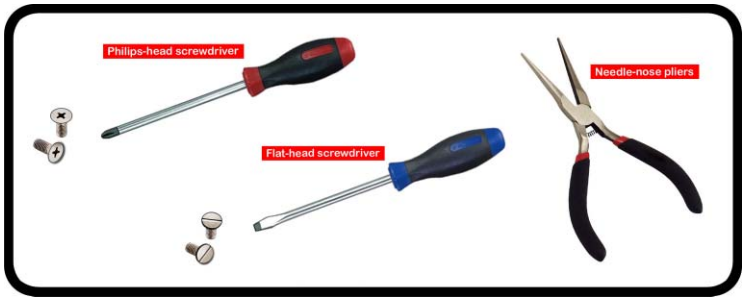

Connections

Connections within the computer are one of four types:

Locking collar sockets for ribbon connectors	To release these connectors, use a small flat-head screwdriver to gently pry the locking collar away from its base. When replacing the connection, make sure the connector is oriented in the same way. The pin1 side is usually not indicated.
Pressure sockets for multi-wire connectors	To release this connector type, grasp it at its head and gently rock it from side to side as you pull it out. Do not pull on the wires themselves. When replacing the connection, do not try to force it. The socket only fits one way.
Pressure sockets for ribbon connectors	To release these connectors, use a small pair of needle-nose pliers to gently lift the connector away from its socket. When replacing the connection, make sure the connector is oriented in the same way. The pin1 side is usually not indicated.
Board-to-board or multi-pin sockets	To separate the boards, gently rock them from side to side as you pull them apart. If the connection is very tight, use a small flat-head screwdriver - use just enough force to start.

Maintenance Precautions

The following precautions are a reminder. To avoid personal injury or damage to the computer while performing a removal and/or replacement job, take the following precautions:

1. **Don't drop it**. Perform your repairs and/or upgrades on a stable surface. If the computer falls, the case and other components could be damaged.
2. **Don't overheat it**. Note the proximity of any heating elements. Keep the computer out of direct sunlight.
3. **Avoid interference**. Note the proximity of any high capacity transformers, electric motors, and other strong magnetic fields. These can hinder proper performance and damage components and/or data. You should also monitor the position of magnetized tools (i.e. screwdrivers).
4. **Keep it dry**. This is an electrical appliance. If water or any other liquid gets into it, the computer could be badly damaged.
5. **Be careful with power**. Avoid accidental shocks, discharges or explosions.
   •Before removing or servicing any part from the computer, turn the computer off and detach any power supplies.
   •When you want to unplug the power cord or any cable/wire, be sure to disconnect it by the plug head. Do not pull on the wire.
6. **Peripherals** – Turn off and detach any peripherals.
7. **Beware of static discharge**. ICs, such as the CPU and main support chips, are vulnerable to static electricity. Before handling any part in the computer, discharge any static electricity inside the computer. When handling a printed circuit board, do not use gloves or other materials which allow static electricity buildup. We suggest that you use an anti-static wrist strap instead.
8. **Beware of corrosion**. As you perform your job, avoid touching any connector leads. Even the cleanest hands produce oils which can attract corrosive elements.
9. **Keep your work environment clean**. Tobacco smoke, dust or other air-born particulate matter is often attracted to charged surfaces, reducing performance.
10. **Keep track of the components**. When removing or replacing any part, be careful not to leave small parts, such as screws, loose inside the computer.

Power Safety Warning

Before you undertake any upgrade procedures, make sure that you have turned off the power, and disconnected all peripherals and cables (including telephone lines and power cord). It is advisable to also remove your battery in order to prevent accidentally turning the machine on.

Cleaning

Do not apply cleaner directly to the computer, use a soft clean cloth.
Do not use volatile (petroleum distillates) or abrasive cleaners on any part of the computer.
(For Computer Models Supplied with Light Blue Cleaning Cloth) Some computer models in this series come supplied with a light blue cleaning cloth. To clean the computer case with this cloth follow the instructions below.

- Power off the computer and peripherals.
- Disconnect the AC/DC adapter from the computer.
- Use a little water to dampen the cloth slightly.
- Clean the computer case with the cloth.
- Dry the computer with a dry cloth, or allow it time to dry before turning on.
- Reconnect the AC/DC adapter and turn the computer on.

Disassembly Steps

The following table lists the disassembly steps, and on which page to find the related information. **PLEASE PERFORM THE DISASSEMBLY STEPS IN THE ORDER INDICATED.**

To remove the Battery:

1. Remove the battery *page 2 - 5*

To remove the Keyboard:

1. Remove the battery *page 2 - 5*
2. Remove the keyboard *page 2 - 6*

To remove the HDD:

1. Remove the battery *page 2 - 5*
2. Remove the keyboard *page 2 - 6*
3. Remove the HDD *page 2 - 7*

To remove the System Memory:

1. Remove the battery *page 2 - 5*
2. Remove the keyboard *page 2 - 6*
3. Remove the HDD *page 2 - 7*
4. Remove the system memory *page 2 - 9*

To remove and install the M.2 SSD:

1. Remove the battery *page 2 - 5*
2. Remove the keyboard *page 2 - 6*
3. Remove the HDD *page 2 - 7*
4. Remove the M.2 SSD *page 2 - 10*

To remove the Wireless LAN Module:

1. Remove the battery *page 2 - 5*
2. Remove the keyboard *page 2 - 6*
3. Remove the HDD *page 2 - 7*
4. Remove the WLAN *page 2 - 11*

To remove the CCD Module:

1. Remove the battery *page 2 - 5*
2. Remove the CCD module *page 2 - 13*

Removing the Battery

1. Turn **off** the computer, turn it over.
2. Remove screws 1 - 2 (***Figure 1a***).
3. Carefully lift the battery 3 up in the direction of the arrow at point 4 (***Figure 1b***).
4. Remove the battery 3 off the computer (***Figure 1c***).
5. Reverse the process to install a new battery (do not forget to replace all the screws and bottom cover).

Figure 1
Battery Removal

a. Remove the screws.
b. Lift the battery up.
c. Remove the battery.

a.

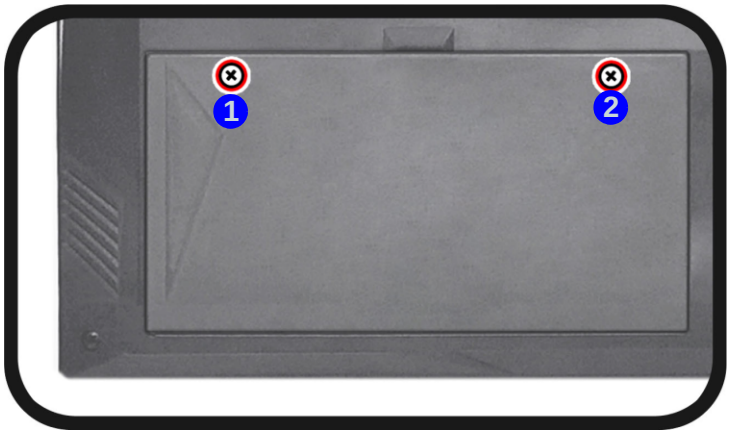

b.

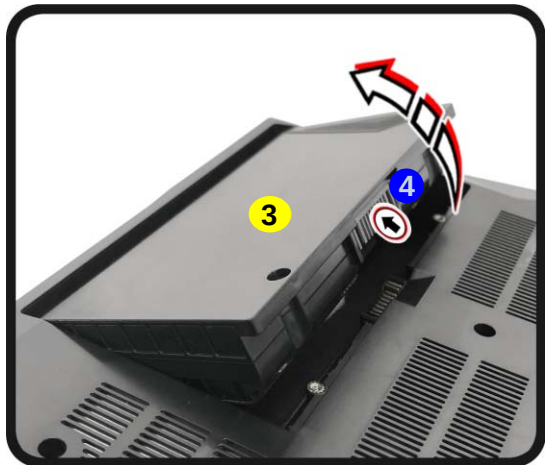

c.

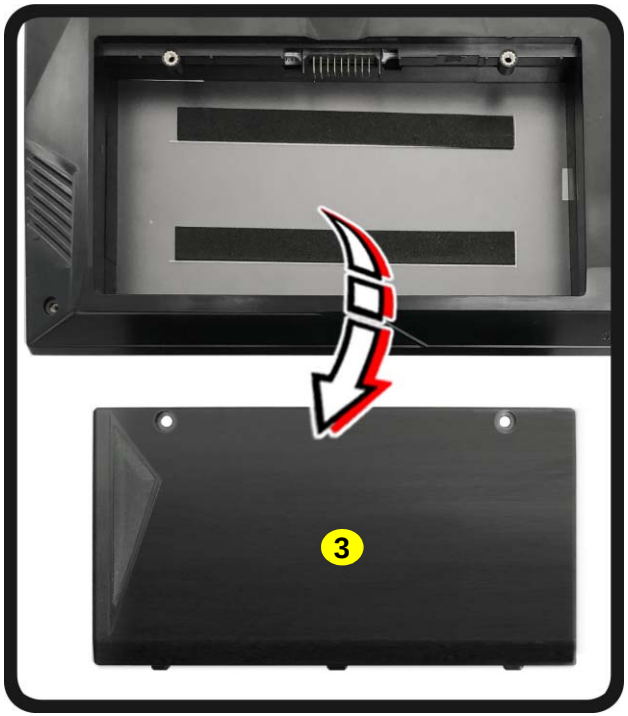

3. Battery

- 2 Screws

Figure 2
Keyboard Removal

a. Remove the screws from the bottom of the computer and then eject the keyboard using a special eject stick to push the keyboard out while releasing the keyboard as shown.
b. Lift the keyboard up and disconnect the keyboard ribbon cable from the locking collar socket.
c. Remove the keyboard.

Re-inserting the Keyboard

When re-inserting the keyboard firstly, align the keyboard tabs at the bottom of the keyboard with the slots in the case.

4. Eject Stick
6. Keyboard

- 2 Screws

Removing the Keyboard

1. Turn **off** the computer, remove the battery (***page 2 - 5***).
2. Remove screws 1 - 2 from the bottom of the computer.
3. Open it up with the LCD on a flat surface before pressing at point 3 to release the keyboard module (use the special eject stick 4 to do this) while releasing the keyboard in the direction of the arrow 5 as shown (***Figure 2a***).
4. Carefully lift the keyboard 6 up, being careful not to bend the keyboard ribbon cable 7. Disconnect the keyboard ribbon cable 7 from the locking collar socket by using a flat-head screwdriver to pry the locking collar pins 8 away from the base (***Figure 2b***).
5. Carefully lift the keyboard 6 off the computer (***Figure 2c***).

a.

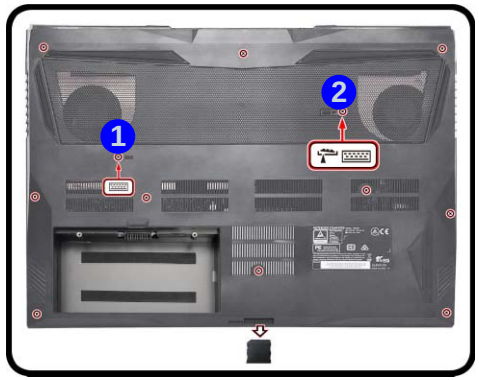

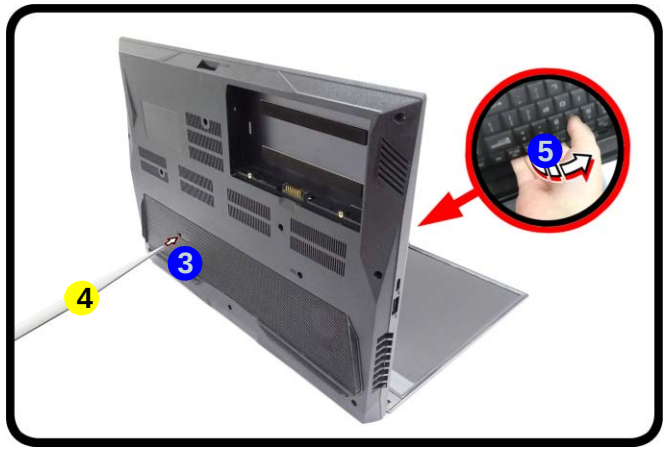

b.

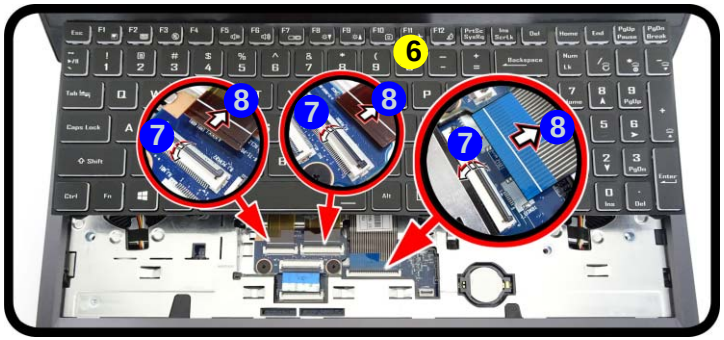

c.

Removing the Hard Disk Drive

The hard disk drive can be taken out to accommodate other 2.5" serial (SATA) hard disk drives with a height of 7mm (h). Follow your operating system's installation instructions, and install all necessary drivers and utilities (as outlined in **Chapter 4 of the User's Manual**) when setting up a new hard disk.

Hard Disk Disassembly Process

1. Turn **off** the computer, remove the battery (*page 2 - 5*) and keyboard (*page 2 - 6*).
2. Remove screws 1 - 2 (*Figure 3a*).
3. Remove the SD card cover 3 and screws 4 - 13 (*Figure 3b*).
4. Carefully lift the bottom case 14 up in the direction of the arrow at point 15 - 20 and remove it (*Figure 3c*).

a.

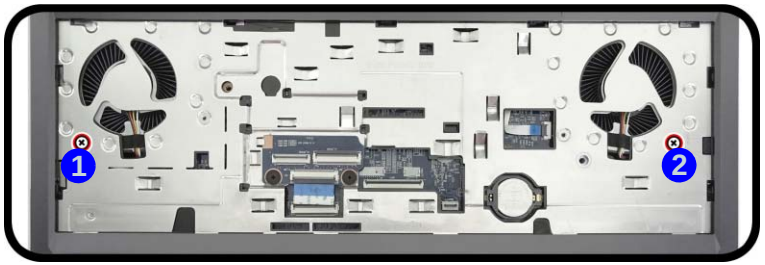

b.

c.

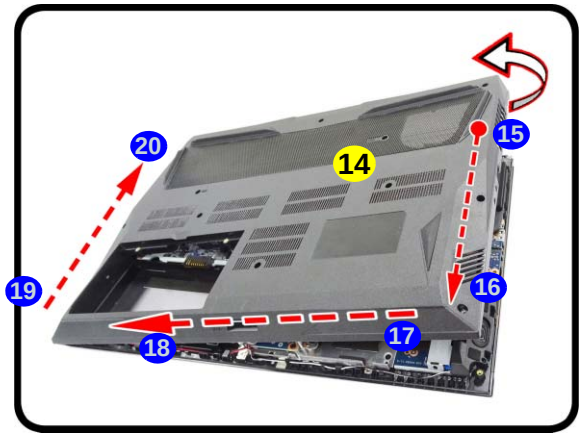

Figure 3
HDD Assembly Removal

a. Remove the screws.
b. Remove the SD cover and screws.
c. Remove the bottom case.

HDD System Warning

New HDD's are blank. Before you begin make sure:

You have backed up any data you want to keep from your old HDD.

You have all the CD-ROMs and FDDs required to install your operating system and programs.

If you have access to the internet, download the latest application and hardware driver updates for the operating system you plan to install. Copy these to a removable medium.

3. SD Card Cover
16. Bottom Case

- 12 Screws

Figure 4
HDD Assembly Removal (cont'd.)

d. Locate the HDD.
e. Remove the screw.
f. Slide and pull the HDD assembly out of the bay.
g. Remove the screws and bracket from the HDD.

5. The HDD will be visible at point 21 on the mainboard (***Figure 4d***).
6. Remove screws 22 - 24 from the HDD assembly and disconnect the ribbon cable 25 from the locking collar socket by using a flat-head screwdriver to pry the locking collar pins 26 away from the base (***Figure 4e***).
7. Lift the hard disk assembly 27 out of the bay 28 (***Figure 4f***).
8. Remove screws 29 - 30 and bracket 31 from the hard disk 32 (***Figure 4g***).
9. Reverse the process to install a new hard disk (do not forget to carefully reinsert the bottom case in reverse order (see ***Figure 3c***) and to replace the screws).

d.
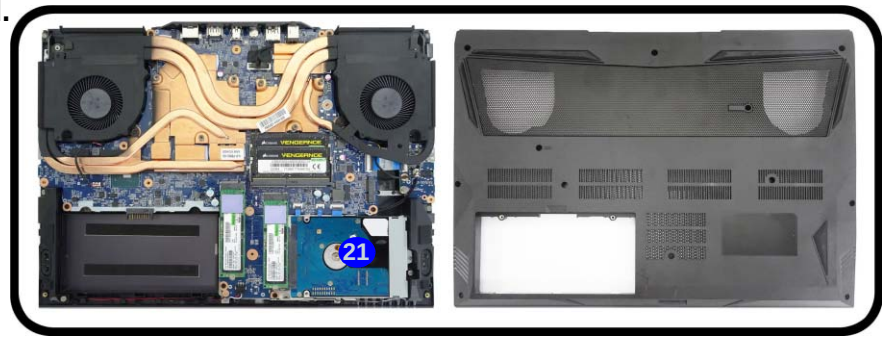

e.
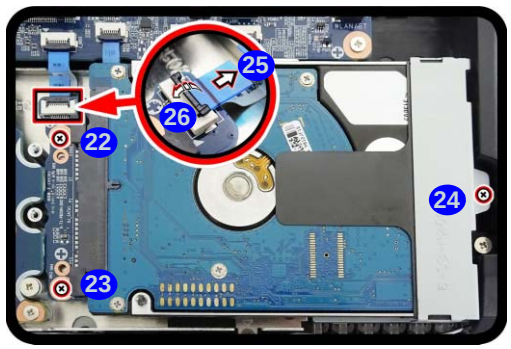

f.
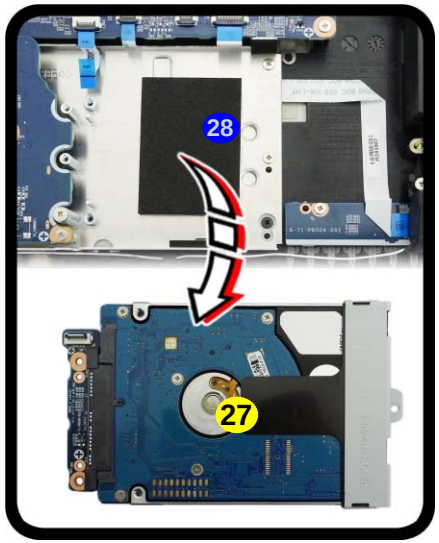

g
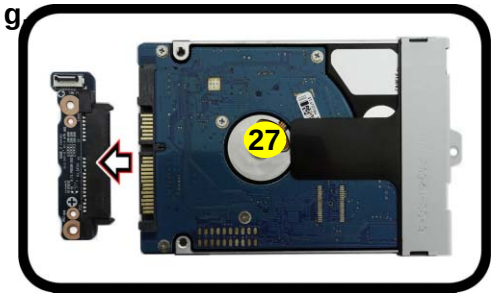

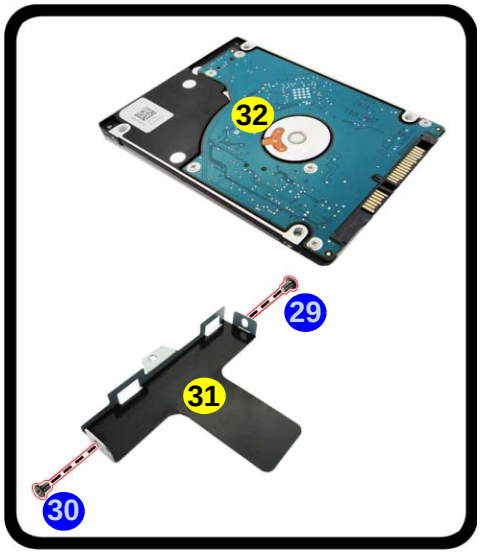

27. HDD Assembly
31. HDD Bracket
32. HDD

- 5 Screws

Removing the System Memory (RAM)

The computer has four memory sockets for 260 pin Small Outline Dual In-line Memory Modules (SO-DIMM) supporting DDR4 Up to 2400 MHz. The main memory can be expanded up to 64GB. The total memory size is automatically detected by the POST routine once you turn on your computer.

Memory Upgrade Process

1. Turn **off** the computer, remove the battery (***page 2 - 5***), keyboard (***page 2 - 6***) and bottom cover (***page 2 - 7***).
2. The RAM modules will be visible at point 1 on the mainboard (***Figure 5a***).
3. Gently pull the two release latches (2 & 3) on the sides of the memory socket in the direction indicated by the arrows (***Figure 5b***). The RAM module 4 will pop-up (***Figure 5c***), and you can then remove it.
4. Pull the latches to release the second module if necessary.
5. Insert a new module holding it at about a 30° angle and fit the connectors firmly into the memory slot.
6. The module will only fit one way as defined by its pin alignment. Make sure the module is seated as far into the slot as it will go. DO NOT FORCE IT; it should fit without much pressure.
7. Press the module in and down towards the mainboard until the slot levers click into place to secure the module.
8. Replace the bottom cover and the screws (see ***page 2 - 7***).
9. Restart the computer to allow the BIOS to register the new memory configuration as it starts up.

Figure 5
RAM Module Removal

a. The RAM modules will be visible at point 1 on the mainboard.
b. Pull the release latches.
c. Remove the module.

Contact Warning

Be careful not to touch the metal pins on the module's connecting edge. Even the cleanest hands have oils which can attract particles, and degrade the module's performance.

a.

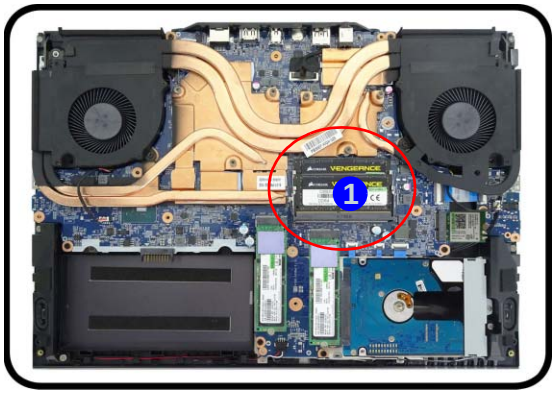

b.

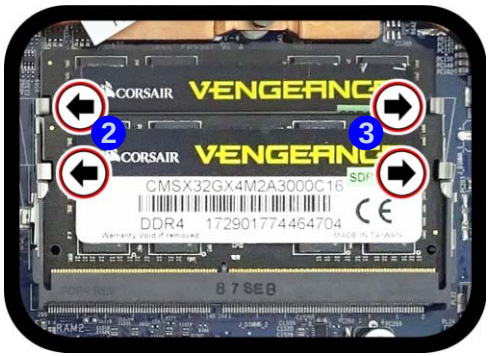

c.

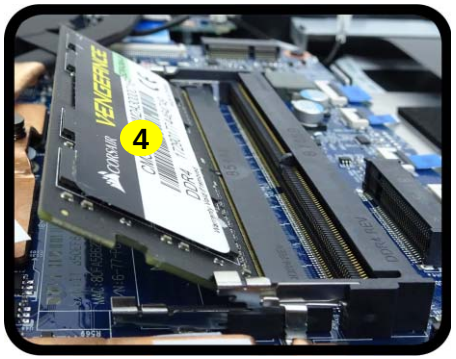

4. RAM Module

Figure 6
M.2 SSD-1 Module Removal

a. Locate the M.2 SSD.
b. Remove the screw.
c. The M.2 SSD module will pop up.

Removing the M.2 SSD Module

M.2 SSD Removal Procedure

1. Turn **off** the computer, remove the battery (***page 2 - 5***), keyboard (***page 2 - 6***) and bottom cover (***page 2 - 7***).
2. The M.2 SSD modules will be visible at point 1 on the mainboard (***Figure 6a***).
3. Remove the screw 2 (***Figure 6b***).
4. The M.2 SSD module 3 (***Figure 6c***) will pop-up, and you can remove it from the computer.
5. Reverse the process to install a new module (do not forget to replace the screws and thermal pad).

a.

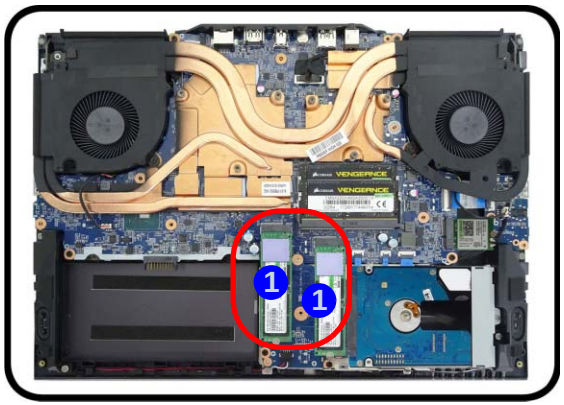

b.

c.

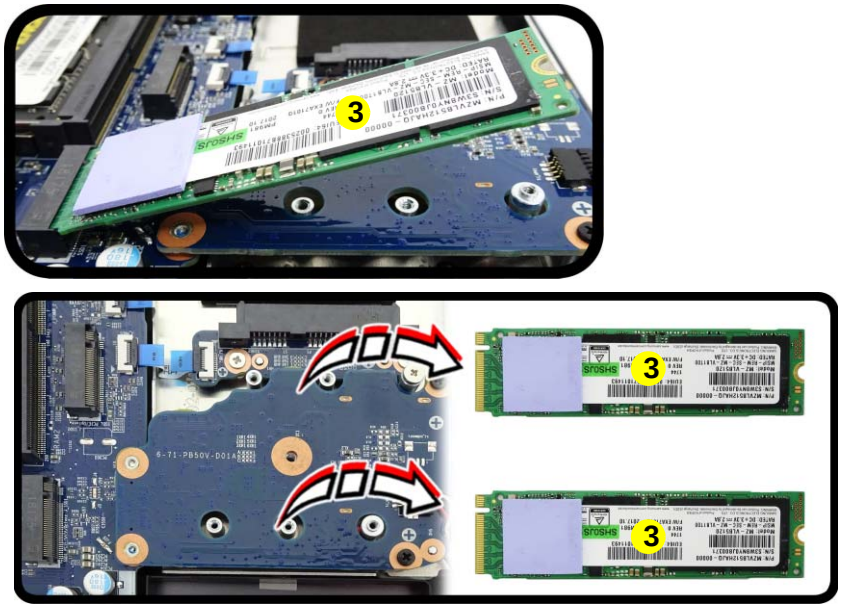

3.M2 SSD Module

- 1 Screw

Removing the Wireless LAN Module

1. Turn **off** the computer, remove the battery (***page 2 - 5***), keyboard (***page 2 - 6***) and bottom cover (***page 2 - 7***).
2. The Wireless LAN module will be visible at point 1 on the mainboard (***Figure 7a***).
3. Carefully disconnect the cables 2 & 3, and then remove the screw 4 (***Figure 7b***)
4. The Wireless LAN module 5 (***Figure 7c***) will pop-up, and you can remove it from the computer.

a.

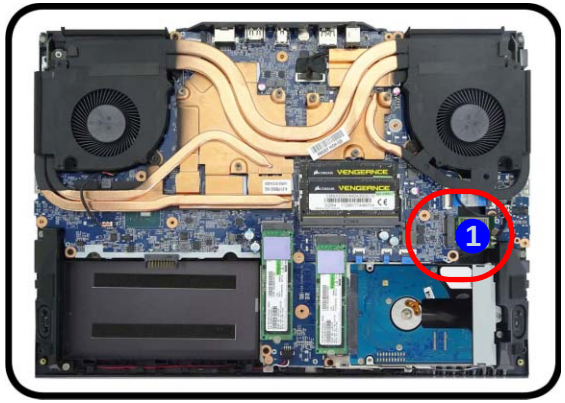

b.

c.

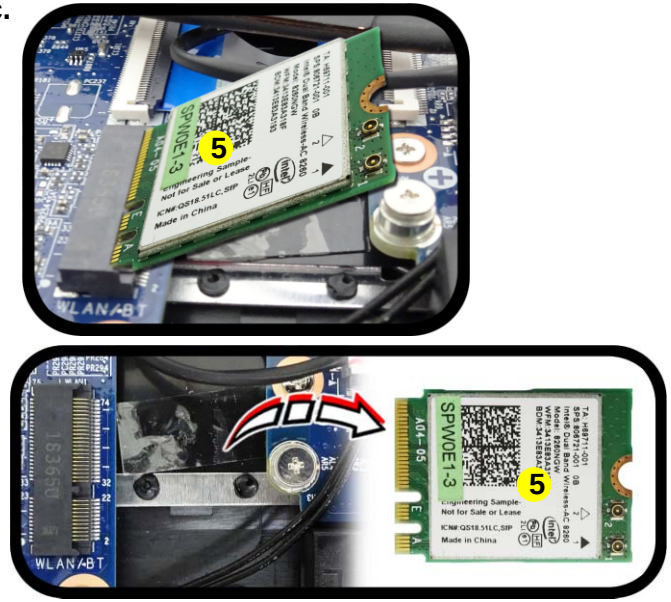

Figure 7
Wireless LAN Module Removal

a. Locate the WLAN.
b. Disconnect the cables and remove the screw.
c. The WLAN module will pop up.

Note: Make sure you reconnect the antenna cable to the "1 + 2" socket (***Figure 7b***).

5.Wireless LAN Module

- 1 Screw

Wireless LAN, Combo Module Cables

Note that the cables for connecting to the antennae on WLAN, WLAN & Bluetooth Combo modules are not labelled. The cables/covers (each cable will have either a black or transparent cable cover) are color coded for identification as outlined in the table below.

Module Type	Antenna Type	Cable Color	Cable Cover Type
WLAN/WLAN & Bluetooth Combo	WL 1	Black	Transparent
	WL 2	Black	White

Cable 1 is usually connected to antenna 1 on the module, and cable 2 to antenna 2.

Removing the CCD

1. Turn **off** the computer, turn it over to remove the battery (***page 2 - 5***).
2. Lay the computer down on a flat surface with the top case up forming a 130 degree angle.
3. Carefully run your fingers around the inner frame of the LCD panel to lift at points 1 - 4 as indicated by the arrows (***Figure 8a***).
4. Remove the LCD front cover 5 (***Figure 8b***).

Figure 8
CCD Removal

a. Carefully release the inner frame of the LCD panel at the points indicated by the arrows.
b. Remove the LCD front cover.

a.

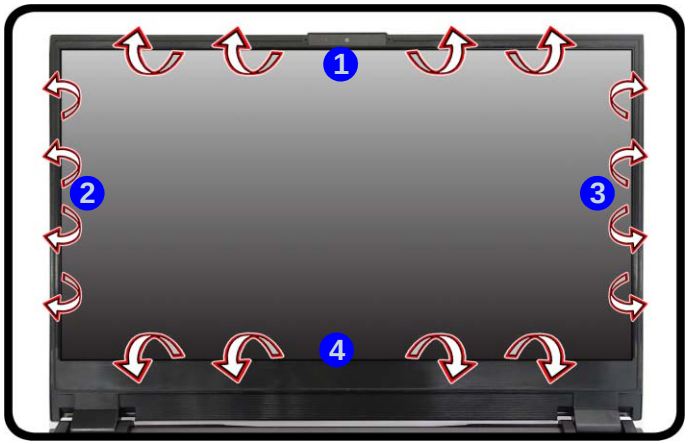

b.

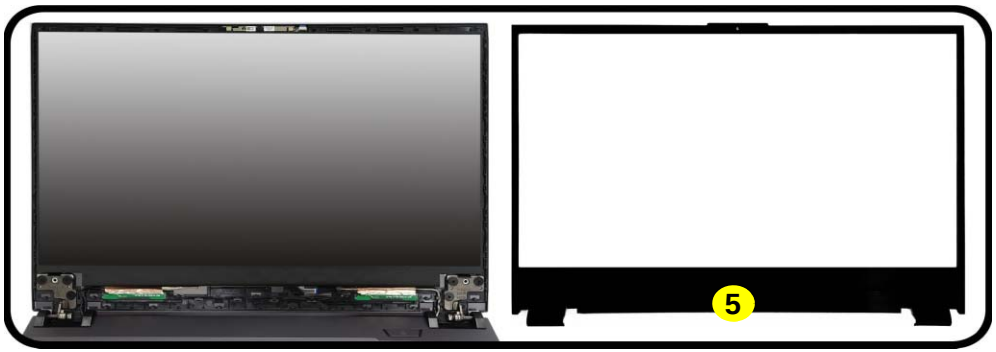

5. LCD Front Cover

Figure 9
CCD Removal (cont'd)

c. Disconnect the cable from the locking collar socket.
d. Remove the CCD module.

5. Disconnect the cable 6 from the locking collar socket by using a flat-head screwdriver to pry the locking collar pins 7 away from the base (***Figure 9c***).
6. Remove the CCD module 8 (***Figure 9d***).
7. Reverse the process to install a new CCD module.

c.

d.

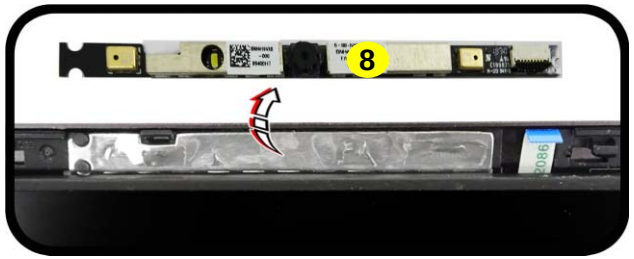

8. CCD Module

Appendix A:Part Lists

This appendix breaks down the ***PB50RF(-G) / PB51RF(-G)*** series notebook's construction into a series of illustrations. The component part numbers are indicated in the tables opposite the drawings.

Note: This section indicates the *manufacturer's* part numbers. Your organization may use a different system, so be sure to cross-check any relevant documentation.

Note: Some assemblies may have parts in common (especially screws). However, the part lists DO NOT indicate the total number of duplicated parts used.

Note: Be sure to check any update notices. The parts shown in these illustrations are appropriate for the system at the time of publication. Over the product life, some parts may be improved or re-configured, resulting in *new* part numbers.

Part List Illustration Location

The following table indicates where to find the appropriate part list illustration.

Table A - 1
Part List Illustration Location

Part	
Top	*page A - 3*
Bottom	*page A - 4*
Main Board	*page A - 5*
HDD	*page A - 6*
LCD	*page A - 7*

Top

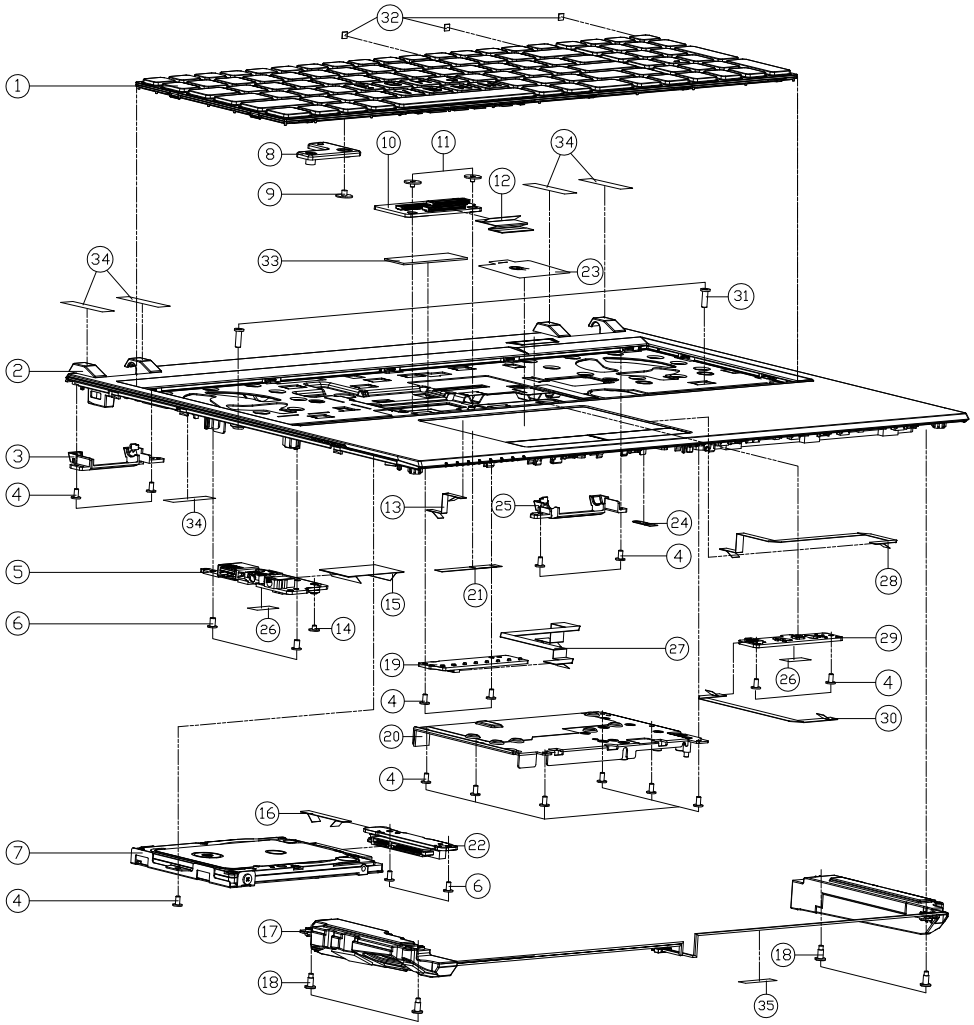

ITEM	PART NAME	PART NO	REMARK
1	KB FOR LED PER KEY KB US SERIES N950TD	6-N950TD-KB-LPK-US	
1	KB FOR MULTI 15C BL KB US SERIES N950TD	6-N950TD-KB-MCL-US	
2	PRE-PROCESS TOP CASE MODULE (W/O FPGAMMA TOUCH PAD+MYLAR+SPONGE) PB50EF	6-78-PB50EF02-011	FOR PB50EF/ED(<G)
2	PRE-PROCESS TOP CASE MODULE (W/FPGAMMA SECURE PAD+MYLAR+SPONGE) PB50EF	6-78-PB50EF02-021	FOR PB51EF/ED(<G)
2	PRE-PROCESS TOP CASE MODULE (W/O FPGAMMA TOUCH PAD+MYLAR+SPONGE) PB50ED	6-78-PB50ED12-010	FOR PB50ED1(<G)
2	PRE-PROCESS TOP CASE MODULE (W/FPGAMMA SECURE PAD+MYLAR+SPONGE) PB50ED	6-78-PB50ED12-020	FOR PB50ED1(<G)
2	PRE-PROCESS TOP CASE MODULE (W/O FPGAMMA TOUCH PAD+MYLAR+SPONGE) PB51EF	6-78-PB51EF02-010	FOR PB51EF/ED
2	PRE-PROCESS TOP CASE MODULE (W/FPGAMMA SECURE PAD+MYLAR+SPONGE) PB51EF	6-78-PB51EF02-020	FOR PB51EF/ED
2	PRE-PROCESS TOP CASE MODULE (W/O FPGAMMA TOUCH PAD+MYLAR+SPONGE) PB51ED	6-78-PB51ED12-010	FOR PB51ED1(<G)
2	PRE-PROCESS TOP CASE MODULE (W/FPGAMMA SECURE PAD+MYLAR+SPONGE) PB51ED	6-78-PB51ED12-020	FOR PB51ED1(<G)
3	HINGE COVER L (PC+ABS) PB50EF	6-42-PB502-052	
4	SCREW M2*4L KI NI ICT NY (DD=Ø4.5,DT=0.8)	6-35-B1120-4RC	
5	AUDIO JACK BOARD V3.0 (W/REDRIVER) PB50EF	6-77-PB508-D02	
5	AUDIO JACK BOARD V2.0 (W/REDRIVER) PB50EF	6-77-PB508-D03	
5	AUDIO JACK BOARD V3.0B (W/REDRIVER) PB50EF	6-77-PB508-D03B	
6	SCREW M2.5*4L (D=4.6,T=0.8) KI NI ICT NY	6-35-B1125-4RA	
7	W/O HDD ASS'Y PB50EF	6-79-PB50EF0J-010	
7	W/HDD ASS'Y PB50EF	6-79-PB50EF0J-020	
8	KB TRANSFER BRACKET SECC PB50EF	6-33-PB502-030	
9	SCREW M2.5*2.5L KI BK/Z ICT NY(Ø8,T=0.6)	6-35-B6125-2R5	
10	PER KEY BOARD V2.0 PB50EF	6-77-PB507-D02	
10	PER KEY BOARD V3.0 PB50EF	6-77-PB507-D03	
11	SCREW M2*2L KI BK/Z ICT NY(Ø8,T=0.6)	6-35-B6120-2RE	
12	FFC CABLE PER-KEY TO MB (P-0.5) L=25MM 60V 40PIN (20) PB50EF	6-43-PB500-072	FOR LED PER KEY KB
13	FFC CABLE FP TO MB (P-0.5) L=32.0MM 60V 6PIN (20) PB50EF	6-43-PB500-052	FOR W/FP (GAMMA SECURE PAD)
14	SCREW M2*2L KI NI ICT NY (DD=Ø5,T=0.8)	6-35-B1120-2RA	
15	FFC CABLE AUDIO TO MB (P-0.5) L=30MM 60V 40PIN (20) PB50EF	6-43-PB500-032	
16	FFC CABLE HDD TO MB (P-0.5) L=26.5MM 60V 10PIN (20) PB50EF	6-43-PB500-062	
17	SPEAKER+CABLE BAL R 1000MM/ L 1000MM 2V 4Ω 4P (TUSTED) PB50EF	6-23-5PB50-0S1	
18	.SCREW M2*6.2L NI ICT NY FOR SPEAKER	6-35-Z1120-6R2	
19	LED BOARD V2.0 PB50EF	6-77-PB504-D02	
19	LED BOARD V3.0 PB50EF	6-77-PB504-D03	
20	TP BRACKET AL5052 PB50EF	6-33-PB502-010	
21	CONDUCTIVE FOR TP(L38*W5 MM) PB50EF	6-47-PB502-020	
22	HDD BOARD V2.0 PB50EF	6-77-PB50N-D02	
22	HDD BOARD V3.0 PB50EF	6-77-PB50N-D03	
23	GAMMA SECURE PAD FINGER PRINT STICKER FOR P95/P6/P7	6-45-P95N8-D10	FOR W/ FP (GAMMA TOUCH PAD)
24	CONDUCTIVE CLOTH BOSS-1 PB50EF	6-47-PB502-010	
25	HINGE COVER R (PC+ABS) PB50EF	6-42-PB502-042	
26	TAPE MYLAR TRANSPARENT (20*10*0.05) P180HM	6-40-P1803-020	
27	FFC CABLE LED TO MB (P-0.5) L=155.7MM 60V 5PIN (20) PB50EF	6-43-PB500-022	
28	FFC CABLE TP TO MB (P-0.5) L=140.7MM 60V 8PIN (20) PB50EF	6-43-PB500-042	
29	PWR BTN BOARD V2.0 PB50EF	6-77-PB50C-D02	
29	PWR BTN BOARD V3.0 PB50EF	6-77-PB50C-D03	
30	FFC CABLE POWER TO MB (P-1.0) L=170MM 60V 4PIN (20) PB50EF	6-43-PB500-012	
31	.SCREW M2.5*8L KI BK/Z NY ICT	6-35-B6125-8R0	
32	ACETATE CLOTH (5*8*0.2T) NB70TJ1	6-47-NB702-030	短期對策
33	W/O PER-KEY RUBBER (40.7*10) PB50EF	6-47-PB502-030	FOR MULTI 15C BL KB FOR W/O MULTI 15C BL KB
34	TAPE MYLAR (C),MYLAR M550J	6-40-M55J2-030	
35	TOP CASE MYLAR FR83 25*7*0.05 P180HM	6-40-P1802-030	

Figure A - 1
Top

A.Part Lists

Bottom

Figure A - 2
Bottom

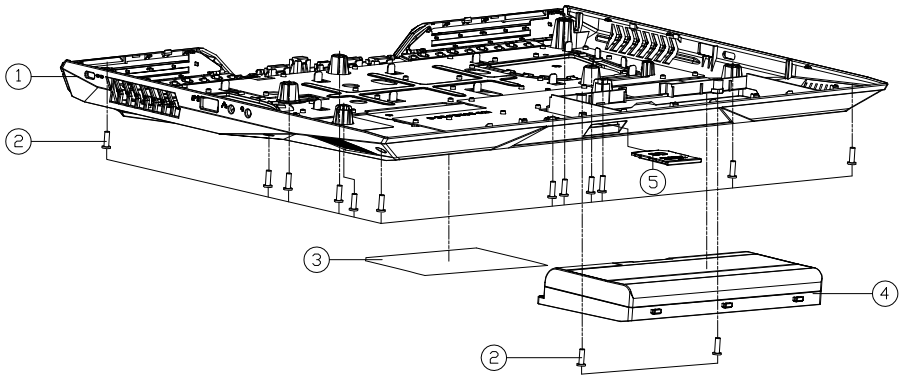

ITEM	PART NAME	PART NO	REMARK
1	(PRE-PROCESS) BOTTOM CASE MODULE PB50EF	6-78-PB50EF03-010	
1	(PRE-PROCESS) BOTTOM CASE MODULE PB51EF	6-78-PB51EF03-010	
2	.SCREW M2.5*8L KI BK/Z NY ICT	6-35-B6125-8R0	
3	PRODUCT LABEL FOR PB50EF	6-45-PB50EF03-010	
3	PRODUCT LABEL FOR PB50EF-G	6-45-PB50EFG3-010	
3	PRODUCT LABEL FOR PB51EF	6-45-PB51EF03-010	
3	PRODUCT LABEL FOR PB51EF-G	6-45-PB51EFG3-010	
3	PRODUCT LABEL FOR PB50RF	6-45-PB50RF03-010	
3	PRODUCT LABEL FOR PB51RF	6-45-PB51RF03-010	
3	PRODUCT LABEL FOR PB50RF-G	6-45-PB50RFG3-010	
3	PRODUCT LABEL FOR PB51RF-G	6-45-PB51RFG3-010	
4	BATP S LI 11.1V/56Wh/62Wh 3S2P SMP/LGC GSC (0804250) 9R0022294/ (HD) (TEXTURE) PB50EF	6-87-PB50S-61D02	
4	BATP S LI 11.1V/28Wh/62Wh 3S2P GETAC/LG (0804250) 5413900000L (TEXTURE) PB50EF	6-87-PB50S-62D02	
5	DUMMY 3DNI NON PUSH TYPE PC+ABS (C7230P-70010EX(CHANGE) W9708UV	6-42-W9708-011	

Main Board

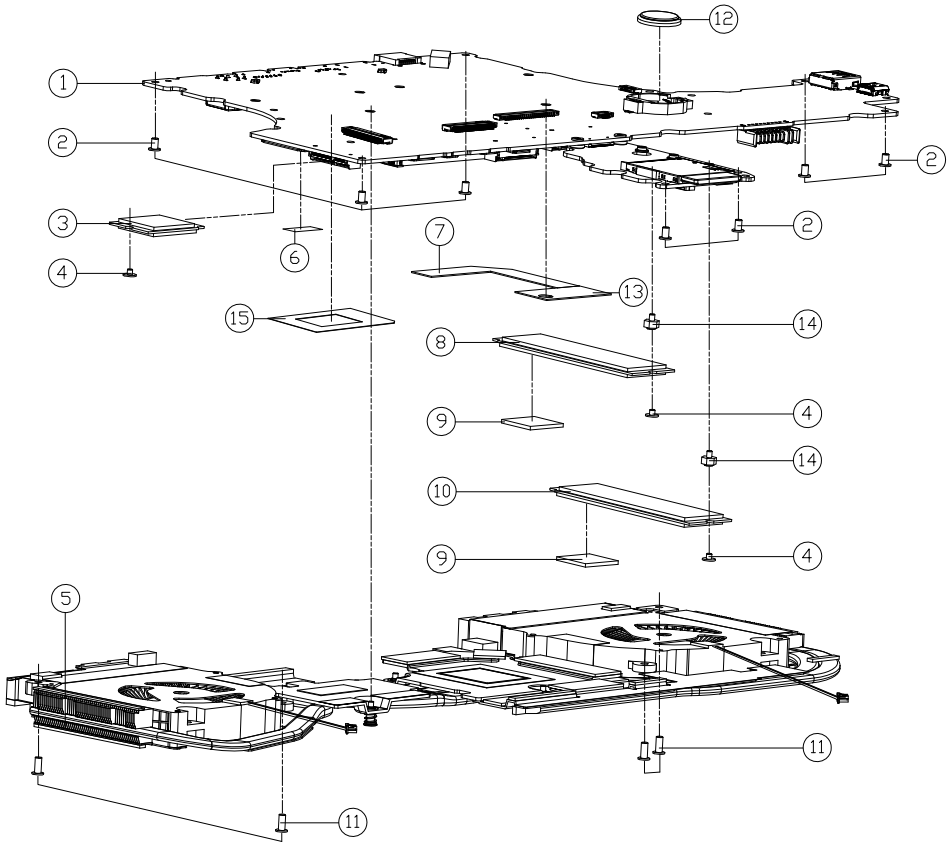

ITEM	PART NAME	PART NO	REMARK
1	MAIN BOARD(CPU/I9-9980HK/2.4G) VGA (GPU/W/TIO),PPM+CARD READER & AMP BOARD VGA PB50RF	6-77-PB50RF0A-N03-E	
1	MAIN BOARD(CPU/I7-9750H/2.6G) VGA (GPU/W/PPM/W/O TIO)+CARD READER & AMP BOARD VGA PB50RF	6-77-PB50RF0A-N03-1F	
1	MAIN BOARD(CPU/I9-9980HK/2.4G) VGA (GPU/W/TIO),PPM+CARD READER & AMP BOARD VGA PB50RF	6-77-PB50RF0A-N03-H	
1	MAIN BOARD(CPU/I9-9980HK/2.4G) VGA (GPU/W/TIO),PPM+CARD READER & AMP BOARD VGA PB50RF-G	6-77-PB50RFGA-N03-E	
2	SCREW M2.5*4L (D=4.6,T=0.8) KI NI ICT NY	6-35-B1125-4RA	
3	WLAN+BT COMBO DUAL BAND KIVET KILLER 5G(AMD)(INTEL 9560)(AGN)(AD 2GZ AC+BT 1X5A CNVI M2 2230	6-88-P95EF-4200	OPTION
3	WLAN+BT COMBO DUAL BAND INTEL THUNDER PEAK 2 9560(AGN) NON-VPRO 2GZ AC+BT 1X5A CNVI M2 2230 PB75FF	6-88-P75FF-4210	OPTION
3	WLAN+BT COMBO DUAL BAND INTEL JEFFERSON PEAK 2 9560(AGN) NON-VPRO 2GZ AC+BT 1X5A CNVI M2 2230	6-88-N24GF-4220	OPTION
3	WLAN+BT COMBO DUAL BAND INTEL JEFFERSON PEAK 1 9462(AGN) NON-VPRO (TO INTERCEPT ANTENNA AC+BT 1X5A CNVI M2 2230	6-88-N24GF-4200	OPTION
4	SCREW M2*2L KI NI ICT NY (DD=#5 ,T=0.8)	6-35-B1120-2RA	
5	CPU & VGA RTX G2 HEATSINK MODULE PB50RF	6-31-PB502-FA1	
6	TAPE MYLAR TRANSPARENT (20*10*0.05) P180HM	6-40-P1803-020	
7	MB ABSORBER-1 PB50EF	6-47-PB50S-010	
8	SSD M2 2280 1TB(MZVLB1T0HALR) SAMSUNG MZVKW1T0HMLH-00000 (OPAL) PCIE G3X4 3D MLC FW(CXV7)(OEM)	6-85-D511T-S00	OPTION
8	SSD M2 2280 512G(MZVLB512HAJQ-00000 (PM981) PCIE G3X4 3D TLC 64 LAYERS	6-85-D515B-S08	OPTION
8	SSD M2 2280 512G(MZVLW512HMJP-00000 (PM961) PCIE G3X4 3D TLC FW(CXV7)(OEM)	6-85-D515B-S05	OPTION
8	SSD M2 2280 16GB INTEL MEMPEKW016GB4C5 (OPTANE MEMORY STORY BEACH 2) PCIE G2X2 3D NVMe	6-85-D5116-Z02	OPTION
8	SSD M2 2280 512G(PHISON ESMFSC6GTC02-E12 (E12) PCIE G3X4 3D TLC 64 LAYERS	6-85-D515B-H02	OPTION
8	SSD M2 2280 256G(KINGSTON KBG40ZNS256G-(OEM)-SK(OEM)(PCI) PCIE G2X2 3D TLC 64 LAYERS	6-85-D51R6-K00	OPTION
8	OPTANE MEMORY M2 2280 16G(INTEL MEMPEKW016GB4C5 (STORY BEACH 2) PCIE G2X2 3D NVMe	6-85-D5164-Z00	OPTION
9	THERMAL PAD FOR M.2 SSD MA500 18*18MM PB50EF	6-48-PB503-011	
10	SSD M2 2280 256G(MICRON MTFDDAV256TCN (OEM) SATA3 (MICRON 3D TLC 64 LAYERS)	6-85-D51R6-101	OPTION
10	SSD M2 2280 1TB(MZVLB1T0HALR) SAMSUNG MZVKW1T0HMLH-00000 (OPAL) PCIE G3X4 3D MLC FW(CXV7)(OEM)	6-85-D511T-S00	OPTION
10	SSD M2 2280 512G(MZVLB512HAJQ-00000 (PM981) PCIE G3X4 3D TLC 64 LAYERS	6-85-D515B-S08	OPTION
10	SSD M2 2280 512G(MZVLW512HMJP-00000 (PM961) PCIE G3X4 3D TLC FW(CXV7)(OEM)	6-85-D515B-S05	OPTION
10	SSD M2 2280 16GB INTEL MEMPEKW016GB4C5 (OPTANE MEMORY STORY BEACH 2) PCIE G2X2 3D NVMe	6-85-D5116-Z02	OPTION
10	SSD M2 2280 256G(PHISON ESMFSC6GTC02-E12 (OEM) SATA3 (TOSHIBA 3D TLC 64 LAYERS) FW(OPAL)	6-85-D51R6-H04	OPTION
10	SSD M2 2280 512G(PHISON ESMFSC6GTC02-E12 (E12) PCIE G3X4 3D TLC 64 LAYERS	6-85-D515B-H02	OPTION
10	SSD M2 2280 256G(KINGSTON KBG40ZNS256G-(OEM)-SK(OEM)(PCI) PCIE G2X2 3D TLC 64 LAYERS	6-85-D51R6-K00	OPTION
10	OPTANE MEMORY M2 2280 16G(INTEL MEMPEKW016GB4C5 (STORY BEACH 2) PCIE G2X2 3D NVMe	6-85-D5164-Z00	OPTION
11	.SCREW M2.5*8L KI BK/Z NY ICT	6-35-B6125-8R0	
12	BATTERY 3V 220MA BBBCR2032B (KTS)	6-23-6A2B2-030	
13	MB ABSORBER-2 PB50EF	6-47-PB50S-020	
14	SCREW M2*2.5L (H=2.5 D=5) STEEL ICT NY FOR NGFF CARD(CHANGE)	6-35-ZA120-2R5-1	
15	CFL 6-2 MYLAR PB50RF	6-40-PB50S-F11	FOR CPU/I7

Figure A - 3
Main Board

HDD

Figure A - 4
HDD

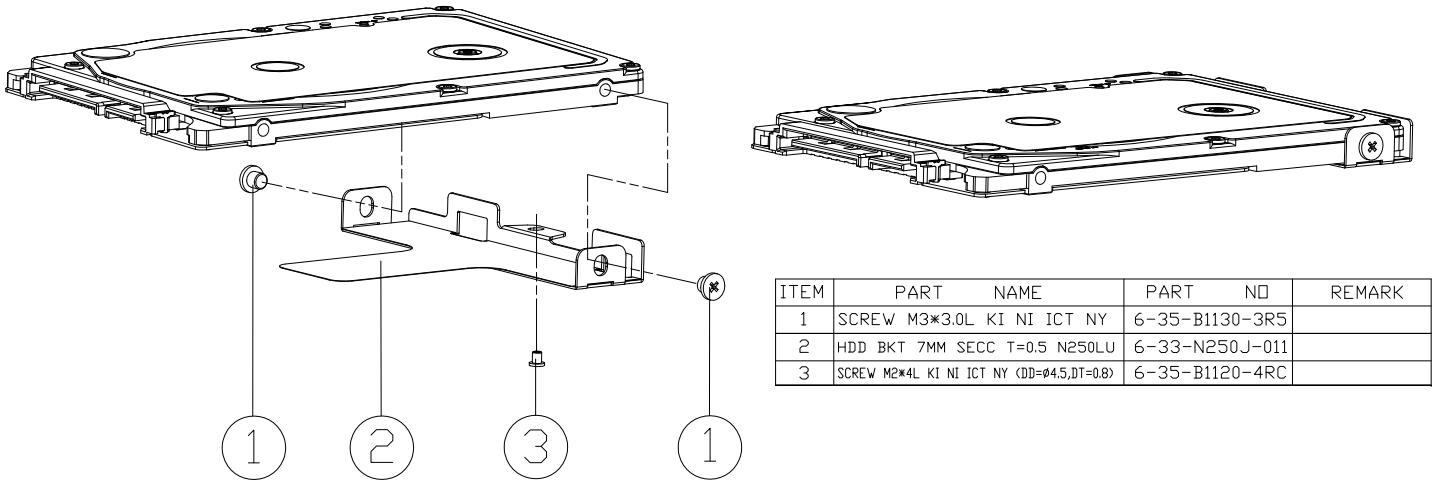

ITEM	PART NAME	PART NO	REMARK
1	SCREW M3*3.0L KI NI ICT NY	6-35-B1130-3R5	
2	HDD BKT 7MM SECC T=0.5 N250LU	6-33-N250J-011	
3	SCREW M2*4L KI NI ICT NY (DD=Ø4.5,DT=0.8)	6-35-B1120-4RC	

LCD

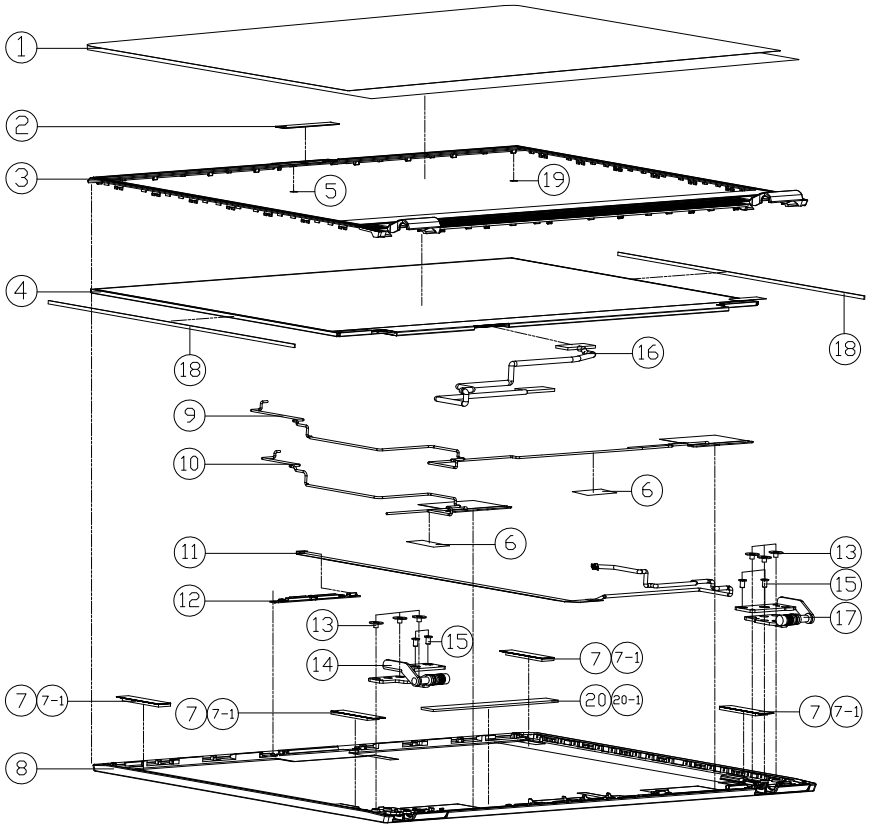

ITEM	PART NAME	PART NO	REMARK
1	LCD PROTECT MYLAR BOPP N150ZU	6-40-N15Z8-010	
2	CCD LENS PMMA PB50EF	6-42-PB501-010	
3	FRONT COVER MODULE PB50EF	6-39-PB501-012	
4	LCD N156' UHD/WVA/N7/NON GT/EDP BOE NE156QUM-N63 LED 26MM	6-50-L1B26-Z020	
4	LCD N156' FHD/WVA/N7/NON GT/EDP INNOLUX N156HCA-EA1 (LED) 32MM	6-50-LBB32-V020	
4	LCD N156' FHD/IPS/N4/NON GT/EDP LG LP156WFC-SP11 (LED) 32MM	6-50-LBB32-L013	
4	LCD N156' FHD/IPS/144HZ/SV G-SYNC/N7/NON GT/EDP LG LP156WFG-SP82 (LED) 26MM	6-50-LBB26-L121	
4	LCD N156' FHD/WVA/144HZ/SV G-SYNC/N7/NON GT/ EDP AU B156HVN01.0(A9A) LED 32MM	6-50-LBB32-G121	
4	LCD N156' FHD/IPS/N4/NON GT/EDP LG LP156WFC-SP11 (LABLE) LED 32MM	6-50-LBB32-L016	
4	LCD N156' FHD/VVA/240HZ/N7/NON GT/ EDP SHARP LQ156M1JW07 (LED) 26MM	6-50-LBB26-A140	
5	MYLAR(7*6*0.15MM,BLACK) FOR P640RF	6-40-00150-760	
6	TAPE MYLAR TRANSPARENT (20*10*0.05) P180HM	6-40-P1803-020	
7	LALATAPE FOR 026 PANEL (35*10*1.8T) PB50EF	6-47-PB501-030	FOR 6-50-L1B26-Z020 6-50-LBB26-L121
7-1	LALATAPE FOR 032 PANEL (35*10*1.2T) PB50EF	6-47-PB501-040	FOR 6-50-LBB32-V020 6-50-LBB32-G121
8	BACK COVER MODULE PB50EF	6-39-PB501-022	
8	BACK COVER MODULE PB51EF	6-39-PB511-021	
9	ANTENNA (SLOT 28MM) IPEX4 WLAN WGT WL1 PCB IR 2.4G/5G 500MM PB50EF	6-23-7PB50-010	
10	ANTENNA (SLOT 28MM) IPEX4 WLAN WGT WL2 PCB IR 2.4G/5G 300MM PB50EF	6-23-7PB50-020	
11	CCD CABLE L=500MM 30V 8PIN (HT) PB50EF	6-43-PB50T-012-1	
12	INC CMOS (CCD) FOR(GB 1MPIXEL)-NO IR 10 DPI(24 NCAD) FROM WHITE-LED W/O-MOMENTA BORDER WITH FFC	6-88-N15ZC-4900	OPTION
12	INC CMOS (CCD) FOR(GB 0.9MPIXEL)-IR 10 DPI(24 NCAD) FROM WHITE-LED W/O-MOMENTA BORDER WITH FFC	6-88-N15ZC-5100	OPTION
13	SCREW M2.5*2.5L KI BK/Z ICT NY(Ø8,T=0.6)	6-35-B6125-2R5	
14	HINGE L (SK7+SGCC) PB50EF	6-33-PB501-0L1	
15	SCREW M2.5*4L (D=4.6,T=0.8) KI NI ICT NY	6-35-B1125-4RA	
16	COAXIAL CABLE FOR EDP 300MM 30V I 40 PIN OL/LV CONLV0104-212-HF) PB50EF	6-43-PB501-022-N	FOR 6-50-L1B26-Z020
16	WIRE CABLE FOR EDP 300MM 30V I 30 PIN OL/LV CONLV13-K30L(PK50) PB50EF	6-43-PB501-031-N	FOR 6-50-LBB32-V020 6-50-LBB32-L013
16	WIRE CABLE FOR EDP 300MM 30V I 40 PIN OL/LV CONLV0610-224-HF) PB50EF	6-43-PB501-012-N	FOR 6-50-LBB26-L121
16	COAXIAL CABLE FOR EDP 300MM I 30V 40PIN (SHARP 156 2ANZ) (OM/LV CON LV0620-220) PB50RC	6-43-PB501-R10-N	FOR 6-50-LBB26-A140
17	HINGE R (SK7+SGCC) PB50EF	6-33-PB501-0R1	
18	PANEL SIDE MYLAR (240*3*0.25T) FOR INNOLUX	6-40-PB501-060	FOR 6-50-LBB32-V020
19	ACETATE CLOTH (5*8*0.2T) NB70TJ1	6-47-NB702-030	短期對策
20	BACK SPONGE DOWN 012T (104*10*1.2T) PB50EF	6-47-0019A-1AL	FOR 6-50-LBB32-V020 6-50-LBB32-L013 6-50-LBB32-L016 6-50-LBB32-G121
20-1	BACK SPONGE DOWN 018T (104*10*1.8T) PB50EF	6-47-0019A-1AK	FOR 6-50-L1B26-Z020 6-50-LBB26-L121

Figure A - 5
LCD

A.Part Lists

Appendix B: Schematic Diagrams

This appendix has circuit diagrams of the ***PB50RF(-G) / PB51RF(-G)*** notebook's PCB's. The following table indicates where to find the appropriate schematic diagram.

Diagram - Page	Diagram - Page	Diagram - Page	Diagram - Page
System Block Diagram - Page B - 2	*Frame Buffer Partition D - Page B - 26*	*USB Redriver - Page B - 50*	*VCCGT, VCCSA - Page B - 74*
Processor 1/6 - Page B - 3	*GPU 4/6 - Page B - 27*	*ANX7440 - Page B - 51*	*NVVDD 1 & 2 - Page B - 75*
Processor 2/6 - Page B - 4	*GPU 5/6 - Page B - 28*	*USB+DP Type-C - Page B - 52*	*NVVDD 3 - Page B - 76*
Processor 3/6 - Page B - 5	*IFP I/O Interface - Page B - 29*	*TPM - Page B - 53*	*PEX_VDD - Page B - 77*
Processor 4/6 - Page B - 6	*GPU 6/6 - Page B - 30*	*LAN RTL8111H - Page B - 54*	*FBVDDQ - Page B - 78*
Processor 5/6 - Page B - 7	*GPU NVVDD, FBVDDQ - Page B - 31*	*ALC1220 - Page B - 55*	*AC-In, Charger - Page B - 79*
Processor 6/6 - Page B - 8	*GPU GND - Page B - 32*	*EC ITE8587 - Page B - 56*	*LED Board - Page B - 80*
DDR4 CHA SO-DIMM_0 - Page B - 9	*GPU Decoupling - Page B - 33*	*Fan, TP, Smart AMP PWR - Page B - 57*	*Power Board - Page B - 81*
DDR4 CHB SO-DIMM_0 - Page B - 10	*GPU Decoupling 2 - Page B - 34*	*LED Keyboard Ctrl - Page B - 58*	*HDD Board - Page B - 82*
Panel - Page B - 11	*GPU Pwr Ctrl, Level Shift - Page B - 35*	*LID - Page B - 59*	*Audio Board, Fan - Page B - 83*
HDMI - Page B - 12	*PCH 1/9 - Page B - 36*	*TR-TBT - Page B - 60*	*Audio Board_USB - Page B - 84*
Mini DP Port - Page B - 13	*PCH 2/9 - Page B - 37*	*AR_TBT_SP PWR - Page B - 61*	*Audio Board_AMP, Jack - Page B - 85*
PS8330B - Page B - 14	*PCH 3/9 - Page B - 38*	*TPS65987 - Page B - 62*	*Per Key Board - Page B - 86*
PS8331 - Page B - 15	*PCH 4/9 - Page B - 39*	*TBT/Type C - Page B - 63*	*RTS5250 - Page B - 87*
GPU 1/6 - Page B - 16	*PCH 5/9 - Page B - 40*	*Conn_to Extend Board - Page B - 64*	*AMP TPA2008D2 - Page B - 88*
GPU 2/6 - Page B - 17	*PCH 6/9 - Page B - 41*	*3.3VA, 3.3V, 3.3VS, 5VS - Page B - 65*	*Subwoofer - Page B - 89*
Frame Buffer Partition A - Page B - 18	*PCH 7/9 - Page B - 42*	*PWR_SW VCCST, STG, SFR_OC - Page B - 66*	*Smart AMP - Page B - 90*
Frame Buffer Partition A - Page B - 19	*PCH 8/9 - Page B - 43*	*PWR_SW 1V8_AON, RUN - Page B - 67*	*Smart AMP for Subwoofer - Page B - 91*
Frame Buffer Partition B - Page B - 20	*PCH 9/9 - Page B - 44*	*VDD3, VDD5 - Page B - 68*	*Speaker Con - Page B - 92*
Frame Buffer Partition B - Page B - 21	*HDD Port - Page B - 45*	*DDR 1.2V, 0.6VS, 2.5V - Page B - 69*	
GPU 3/6 - Page B - 22	*M.2 WLAN+BT - Page B - 46*	*1.8VA, 1.05VA - Page B - 70*	
Frame Buffer Partition C - Page B - 23	*M.2 PCIEX4 SATA - Page B - 47*	*VCCIO - Page B - 71*	
Frame Buffer Partition C - Page B - 24	*CCD, FP - Page B - 48*	*VCore, VCCGT, VCCSA - Page B - 72*	
Frame Buffer Partition D - Page B - 25	*USB - Page B - 49*	*VCore Output Stage - Page B - 73*	

Table B - 1
SCHEMATIC DIAGRAMS

Version Note

The schematic diagrams in this chapter are based upon version 6-7P-PB507-004. If your mainboard (or other boards) are a later version, please check with the Service Center for updated diagrams (if required).

System Block Diagram

Sheet 1 of 91
System Block Diagram

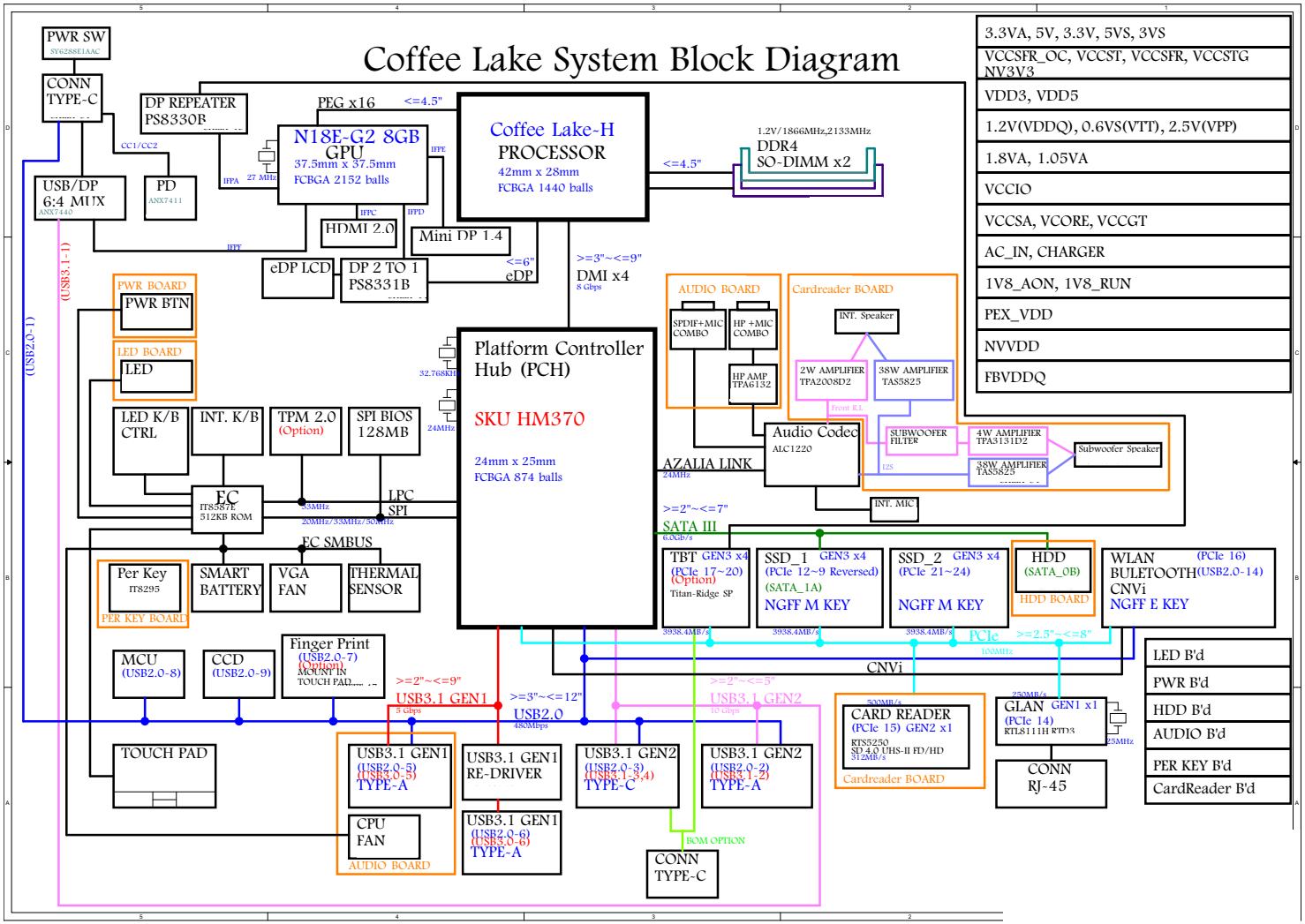

Processor 1/6

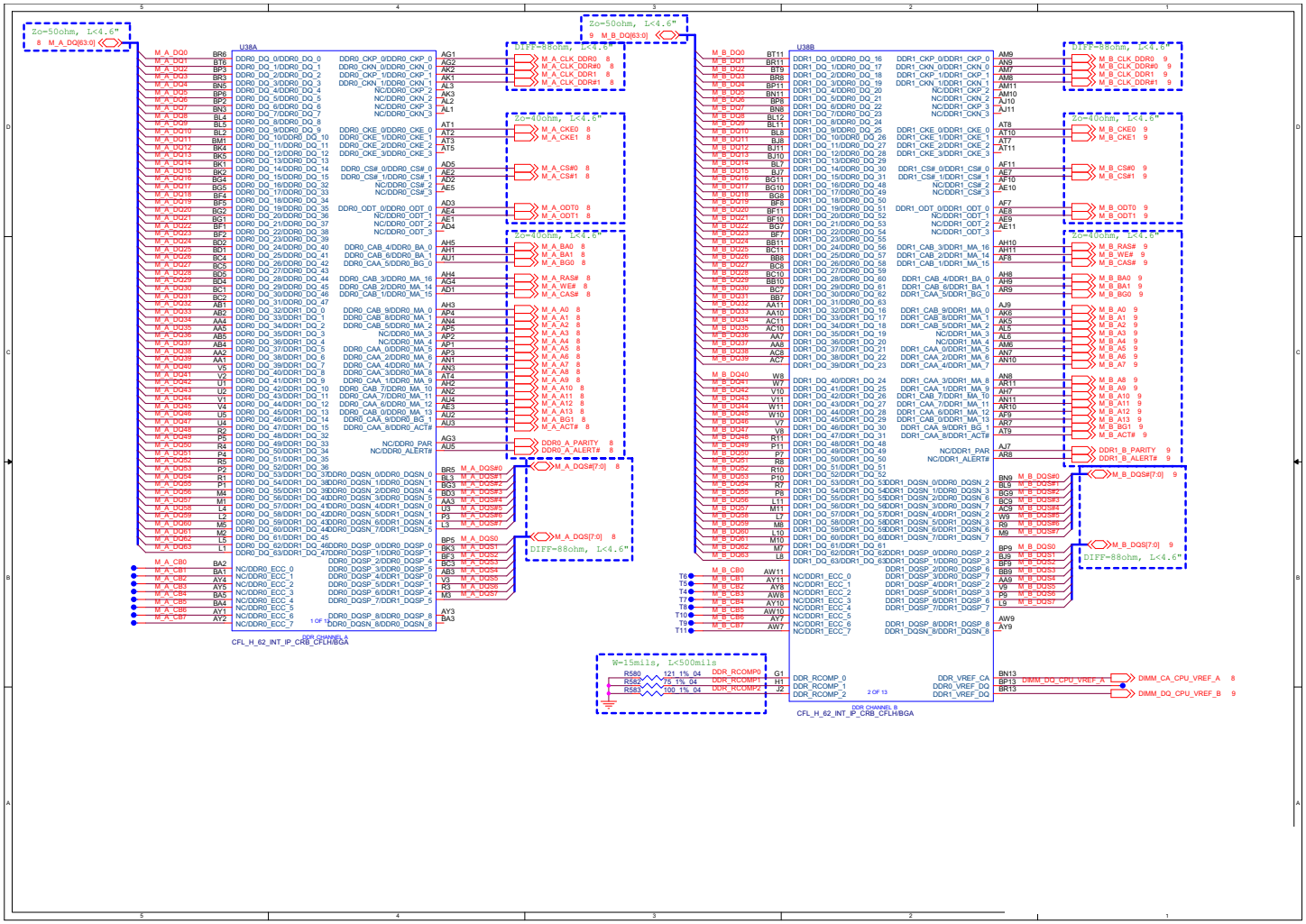

Sheet 2 of 91
Processor 1/6

Processor 2/6

Sheet 3 of 91
Processor 2/6

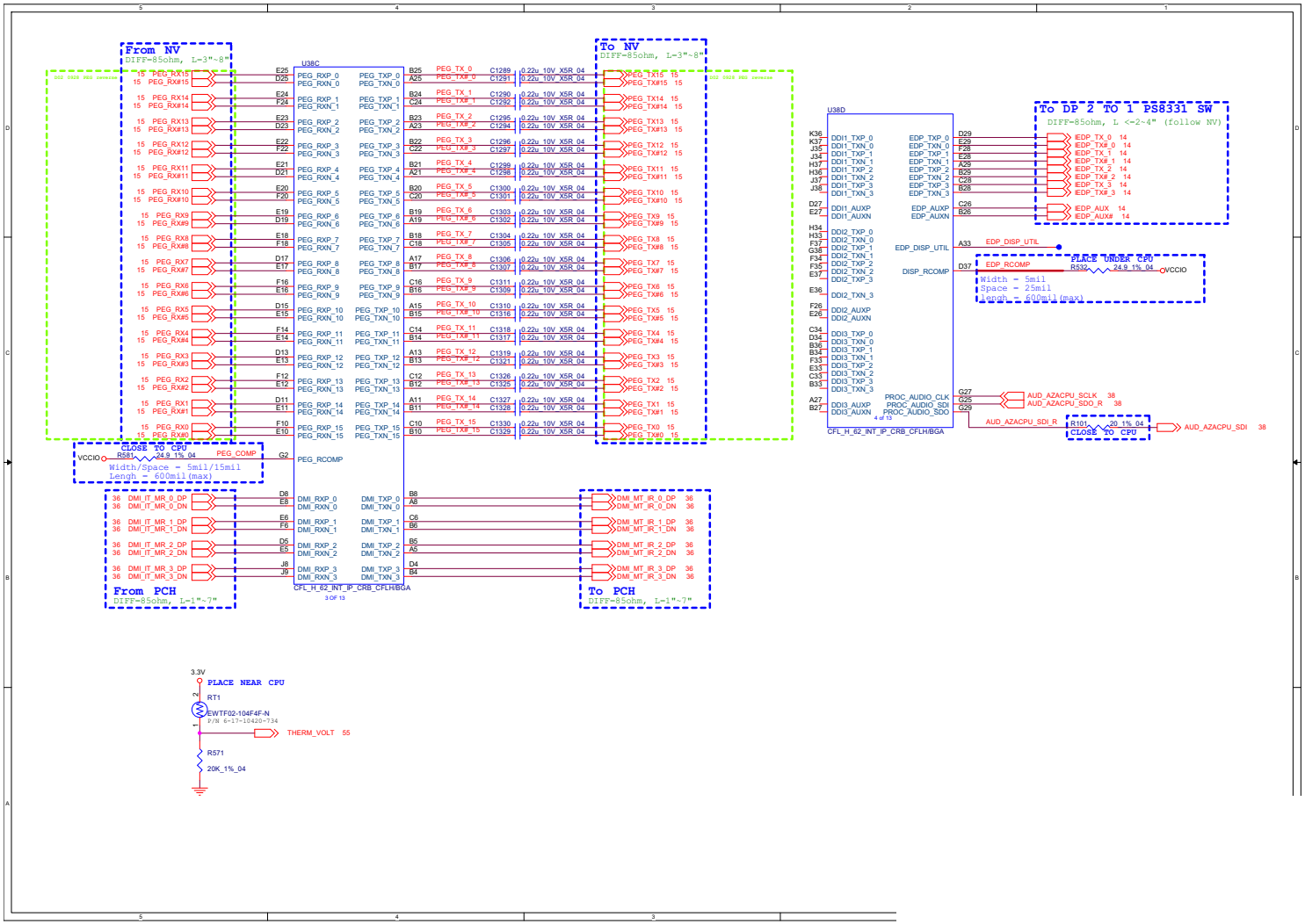

Processor 3/6

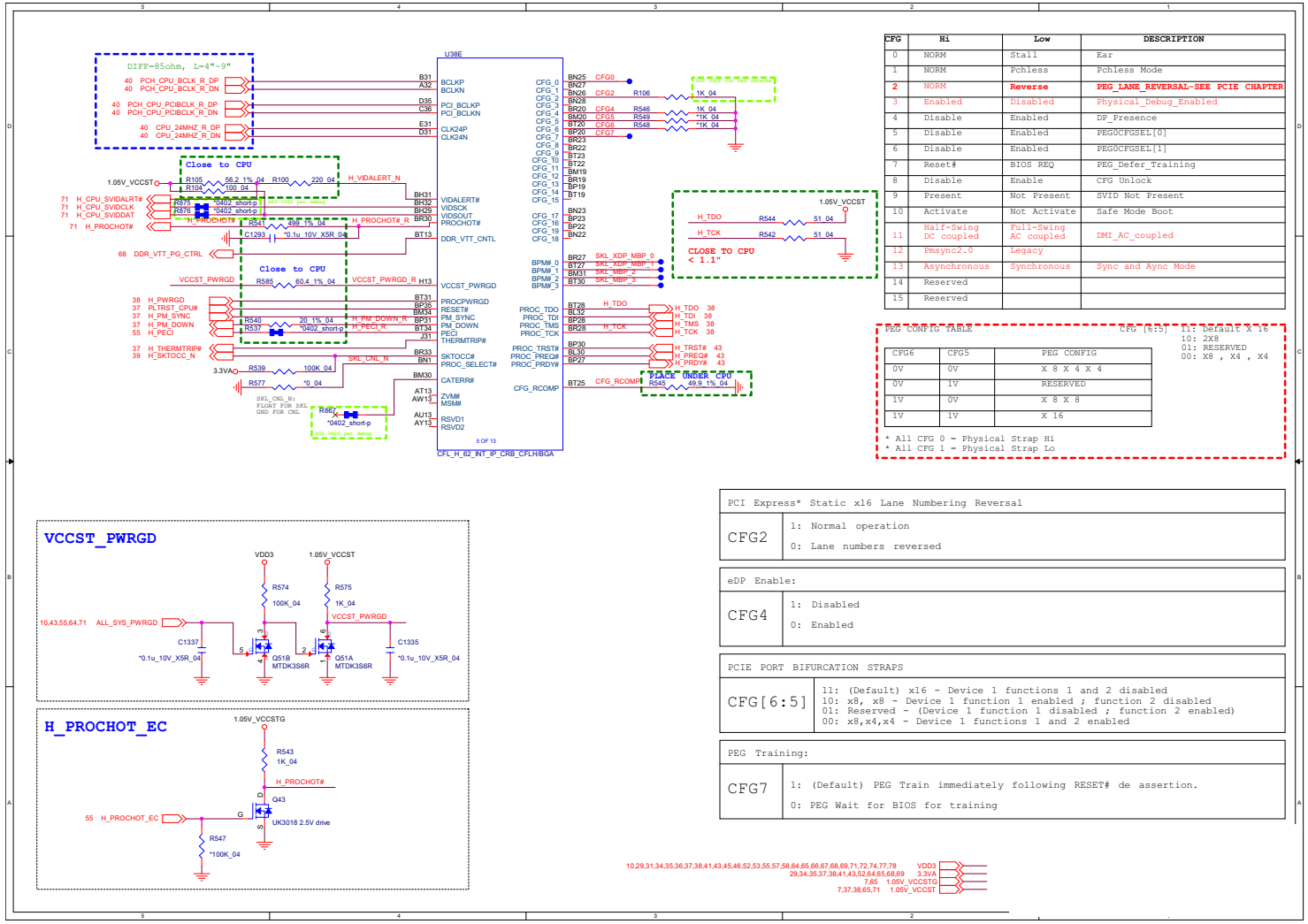

CFG	Hi	Low	DESCRIPTION
0	NORM	Stall	Ear
1	NORM	Pchless	Pchless Mode
2	NORM	**Reverse**	**PEG_LANE_REVERSAL-SEE PCIE CHAPTER**
3	Enabled	Disabled	Physical_Debug_Enabled
4	Disable	Enabled	DP_Presence
5	Disable	Enabled	PEG0CFGSEL[0]
6	Disable	Enabled	PEG0CFGSEL[1]
7	Reset#	BIOS REQ	PEG_Defer_Training
8	Disable	Enable	CFG Unlock
9	Present	Not Present	SVID Not Present
10	Activate	Not Activate	Safe Mode Boot
11	Half-Swing DC coupled	Full-Swing AC coupled	DMI_AC_coupled
12	Pmsync2.0	Legacy	
13	Asynchronous	Synchronous	Sync and Aync Mode
14	Reserved		
15	Reserved		

PEG CONFIG TABLE

CFG [6:5] 11: Default X 16
10: 2X8
01: RESERVED
00: X8 , X4 , X4

CFG6	CFG5	PEG CONFIG
0V	0V	X 8 X 4 X 4
0V	1V	RESERVED
1V	0V	X 8 X 8
1V	1V	X 16

* All CFG 0 = Physical Strap Hi
* All CFG 1 = Physical Strap Lo

PCI Express* Static x16 Lane Numbering Reversal	
CFG2	1: Normal operation 0: Lane numbers reversed

eDP Enable:	
CFG4	1: Disabled 0: Enabled

PCIE PORT BIFURCATION STRAPS	
CFG[6:5]	11: (Default) x16 - Device 1 functions 1 and 2 disabled 10: x8, x8 - Device 1 function 1 enabled ; function 2 disabled 01: Reserved - (Device 1 function 1 disabled ; function 2 enabled) 00: x8,x4,x4 - Device 1 functions 1 and 2 enabled

PEG Training:	
CFG7	1: (Default) PEG Train immediately following RESET# de assertion. 0: PEG Wait for BIOS for training

Sheet 4 of 91
Processor 3/6

Processor 4/6

Sheet 5 of 91
Processor 4/6

Processor 5/6

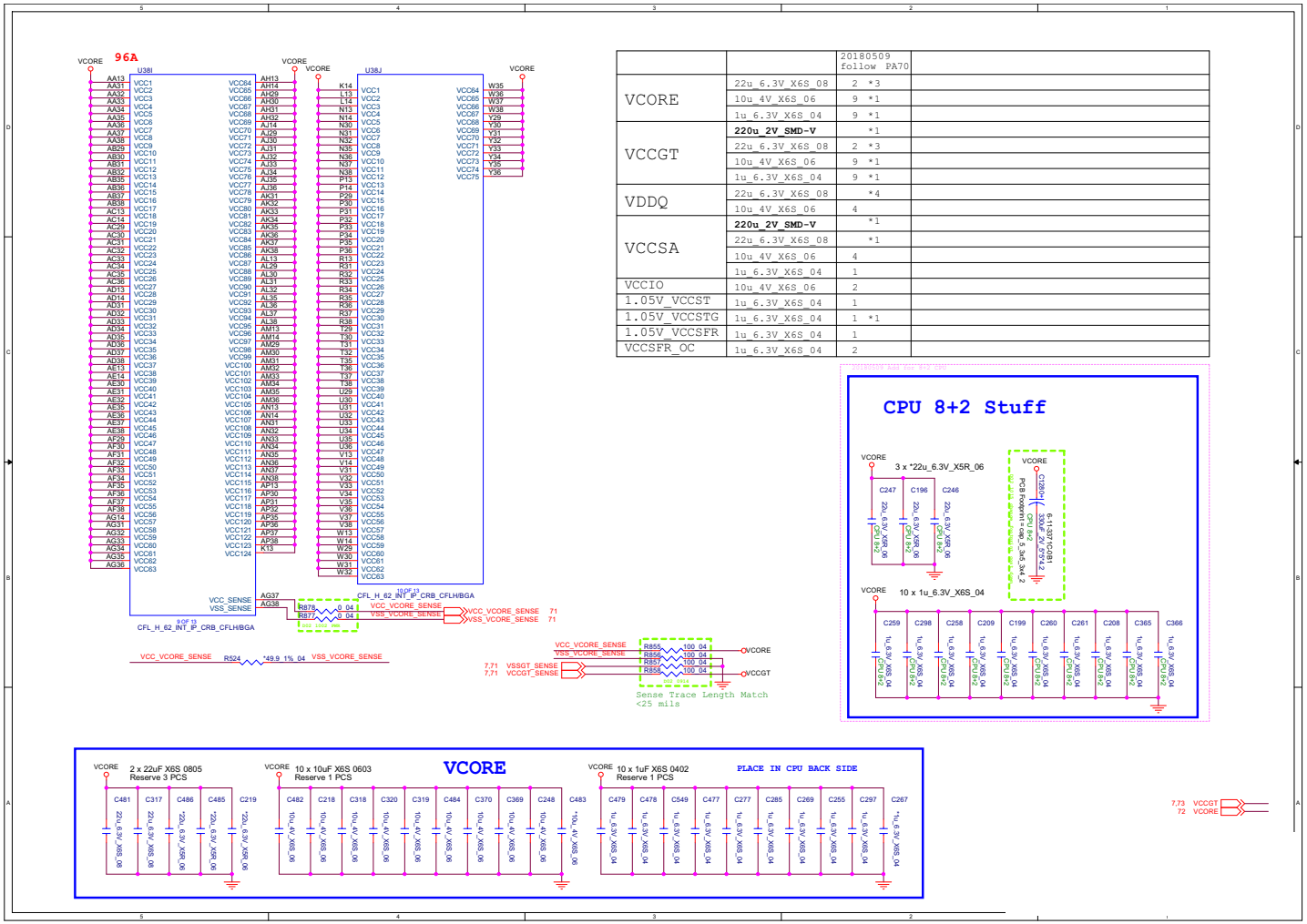

		20180509 follow PA70	
VCORE	22u_6.3V_X6S_08	2 *3	
	10u_4V_X6S_06	9 *1	
	1u_6.3V_X6S_04	9 *1	
VCCGT	**220u_2V_SMD-V**	*1	
	22u_6.3V_X6S_08	2 *3	
	10u_4V_X6S_06	9 *1	
	1u_6.3V_X6S_04	9 *1	
VDDQ	22u_6.3V_X6S_08	*4	
	10u_4V_X6S_06	4	
VCCSA	**220u_2V_SMD-V**	*1	
	22u_6.3V_X6S_08	*1	
	10u_4V_X6S_06	4	
	1u_6.3V_X6S_04	1	
VCCIO	10u_4V_X6S_06	2	
1.05V_VCCST	1u_6.3V_X6S_04	1	
1.05V_VCCSTG	1u_6.3V_X6S_04	1 *1	
1.05V_VCCSFR	1u_6.3V_X6S_04	1	
VCCSFR_OC	1u_6.3V_X6S_04	2	

Sheet 6 of 91
Processor 5/6

Processor 6/6

Sheet 7 of 91
Processor 6/6

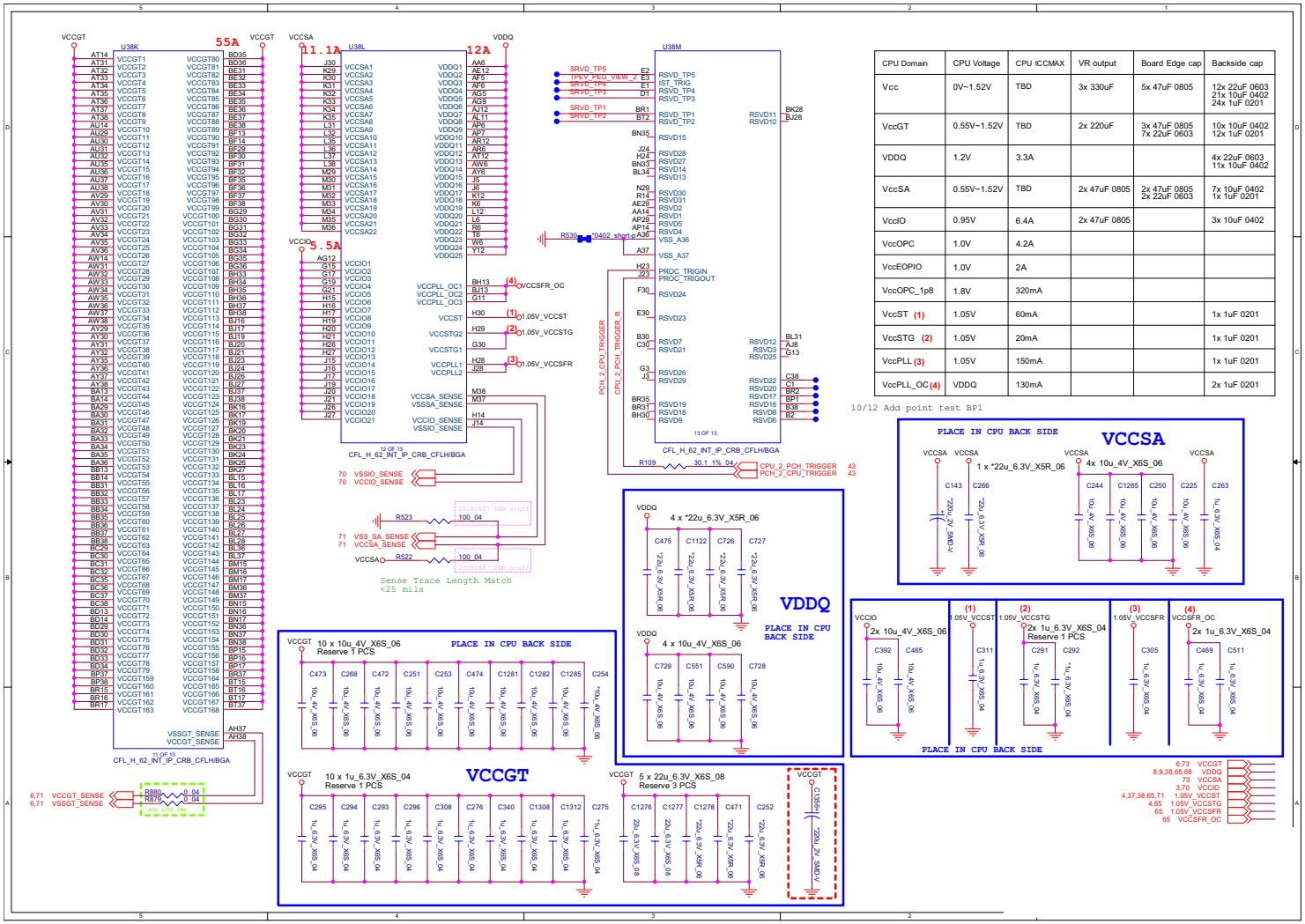

CPU Domain	CPU Voltage	CPU ICCMAX	VR output	Board Edge cap	Backside cap
Vcc	0V~1.52V	TBD	3x 330uF	5x 47uF 0805	12x 22uF 0603 21x 10uF 0402 24x 1uF 0201
VccGT	0.55V~1.52V	TBD	2x 220uF	3x 47uF 0805 7x 22uF 0603	10x 10uF 0402 12x 1uF 0201
VDDQ	1.2V	3.3A			4x 22uF 0603 11x 10uF 0402
VccSA	0.55V~1.52V	TBD	2x 47uF 0805	2x 47uF 0805 2x 22uF 0603	7x 10uF 0402 1x 1uF 0201
VccIO	0.95V	6.4A	2x 47uF 0805		3x 10uF 0402
VccOPC	1.0V	4.2A			
VccEOPIO	1.0V	2A			
VccOPC_1p8	1.8V	320mA			
VccST (1)	1.05V	60mA			1x 1uF 0201
VccSTG (2)	1.05V	20mA			1x 1uF 0201
VccPLL (3)	1.05V	150mA			1x 1uF 0201
VccPLL_OC (4)	VDDQ	130mA			2x 1uF 0201

10/12 Add point test BP1

DDR4 CHA SO-DIMM_0

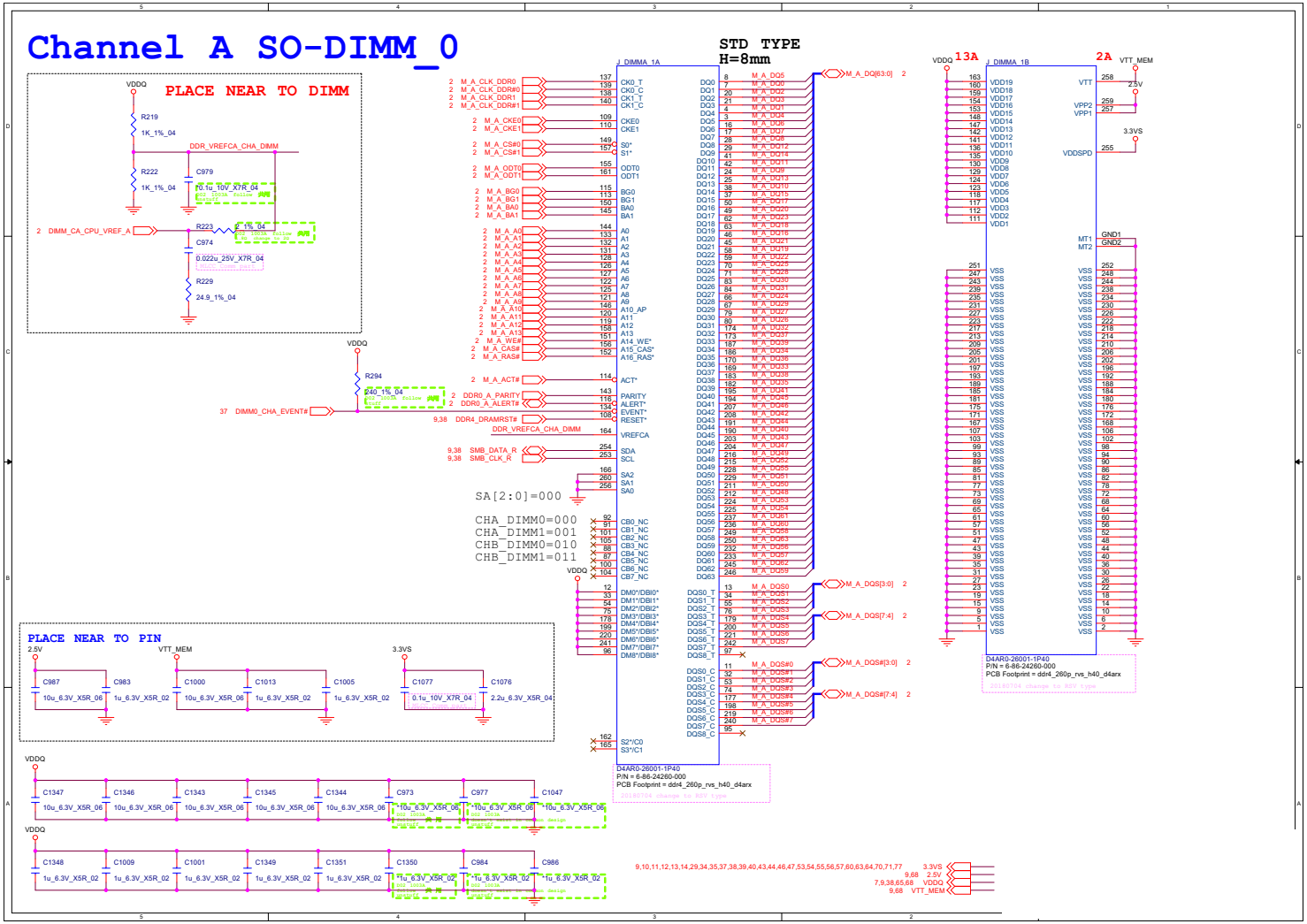

Sheet 8 of 91
DDR4 CHA SO-DIMM_0

DDR4 CHB SO-DIMM_0

Sheet 9 of 91
DDR4 CHB SO-DIMM_0

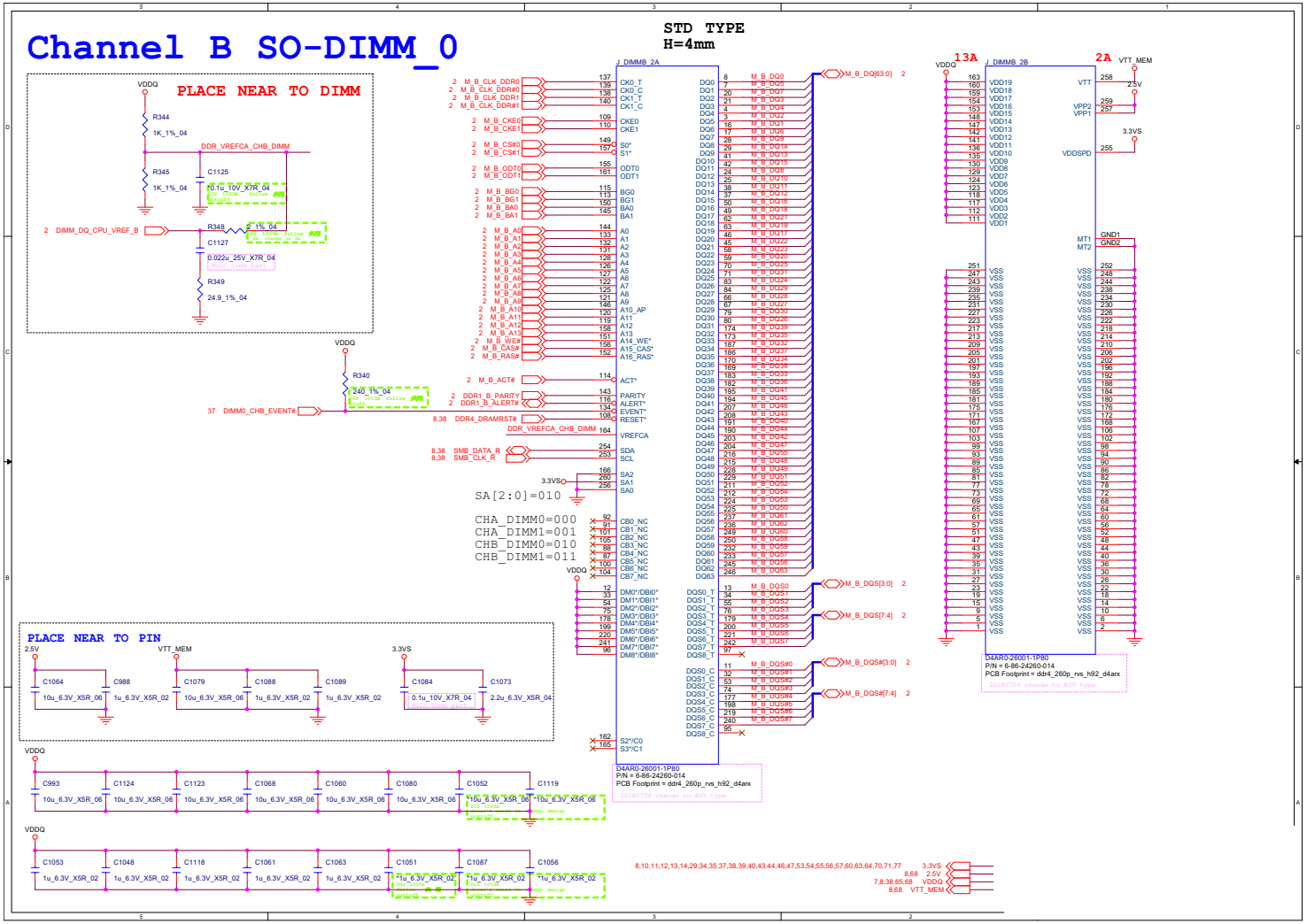

Panel

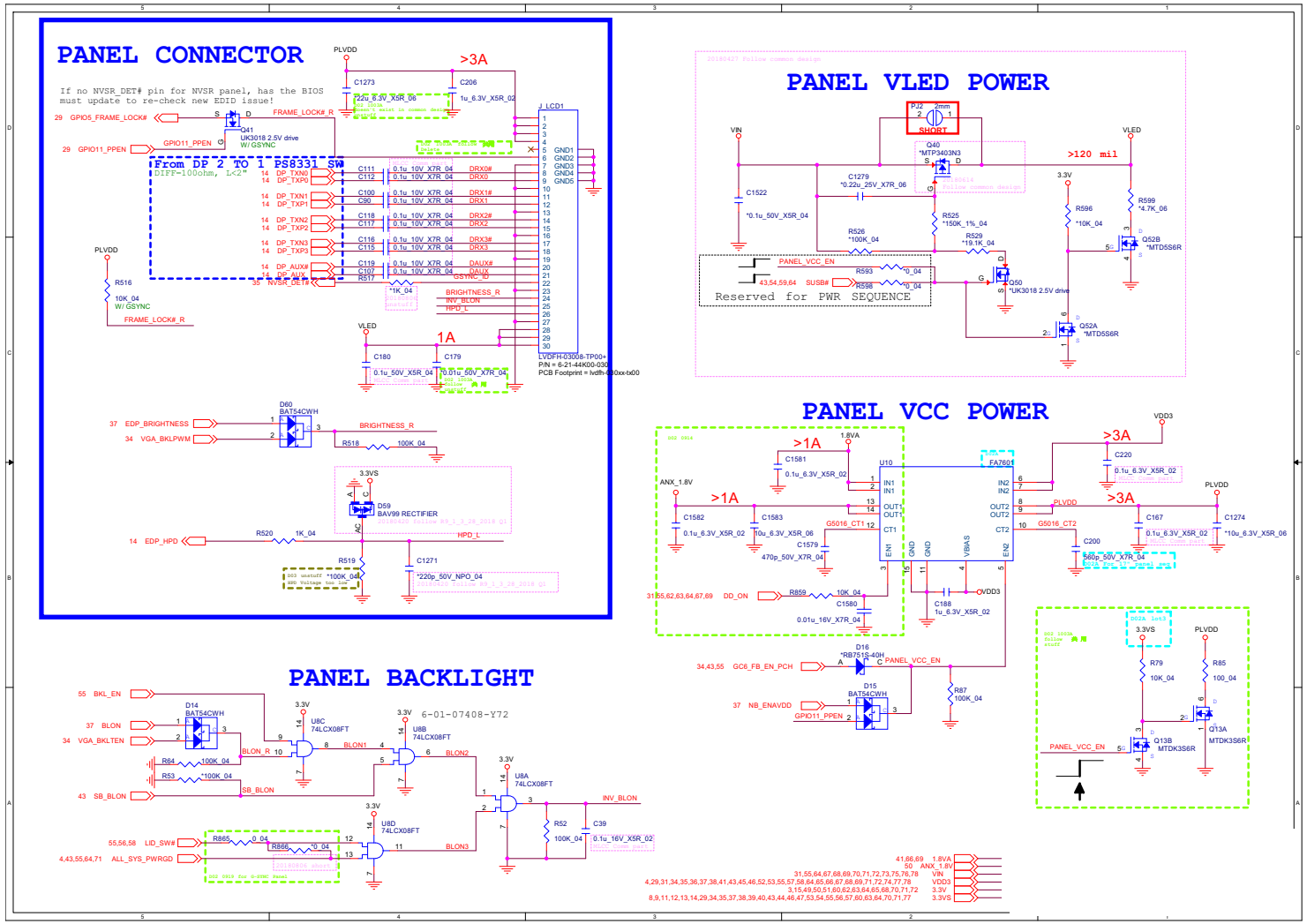

Sheet 10 of 91
aAnel

HDMI

Sheet 11 of 91
HDMI

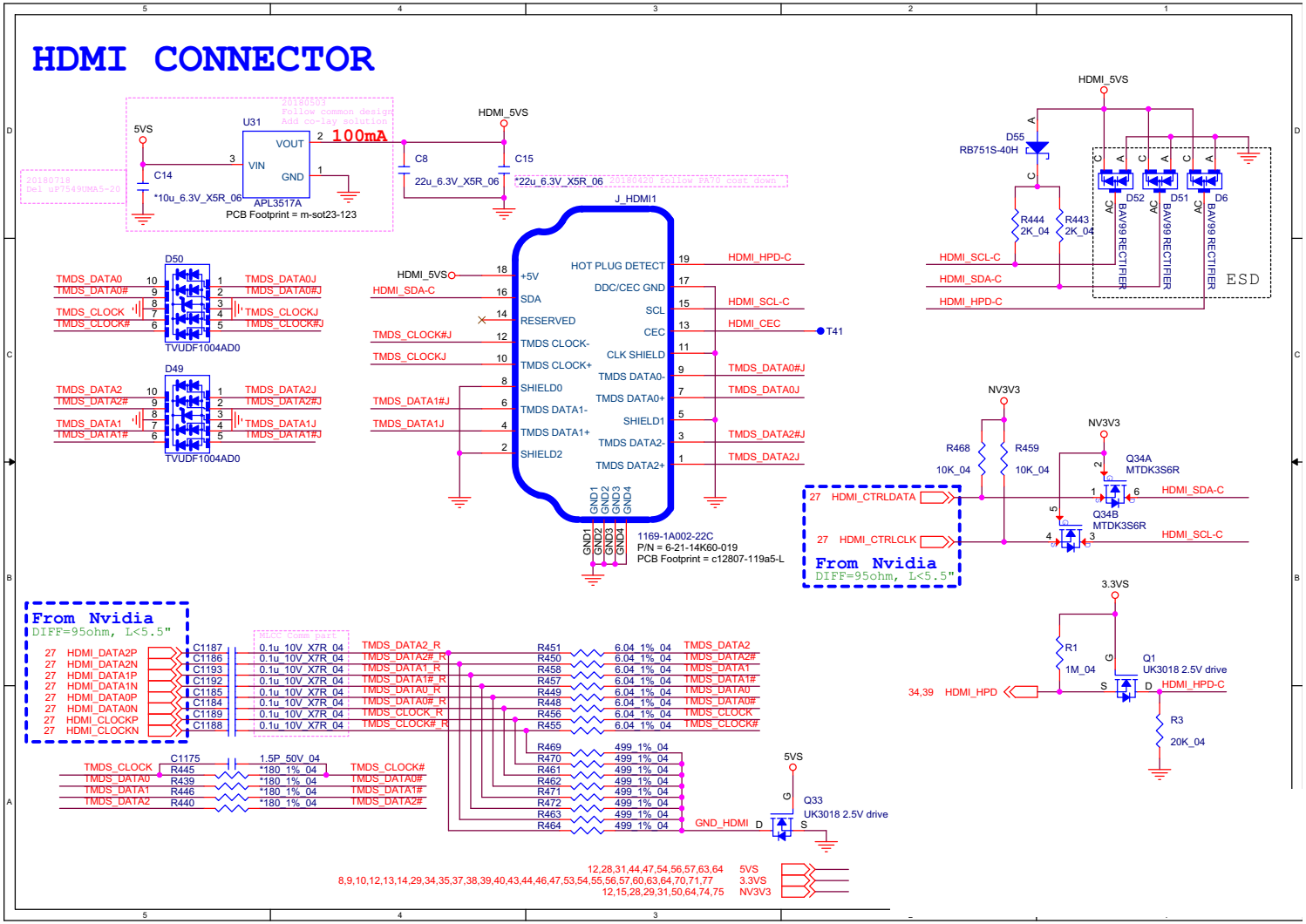

Mini DP Port

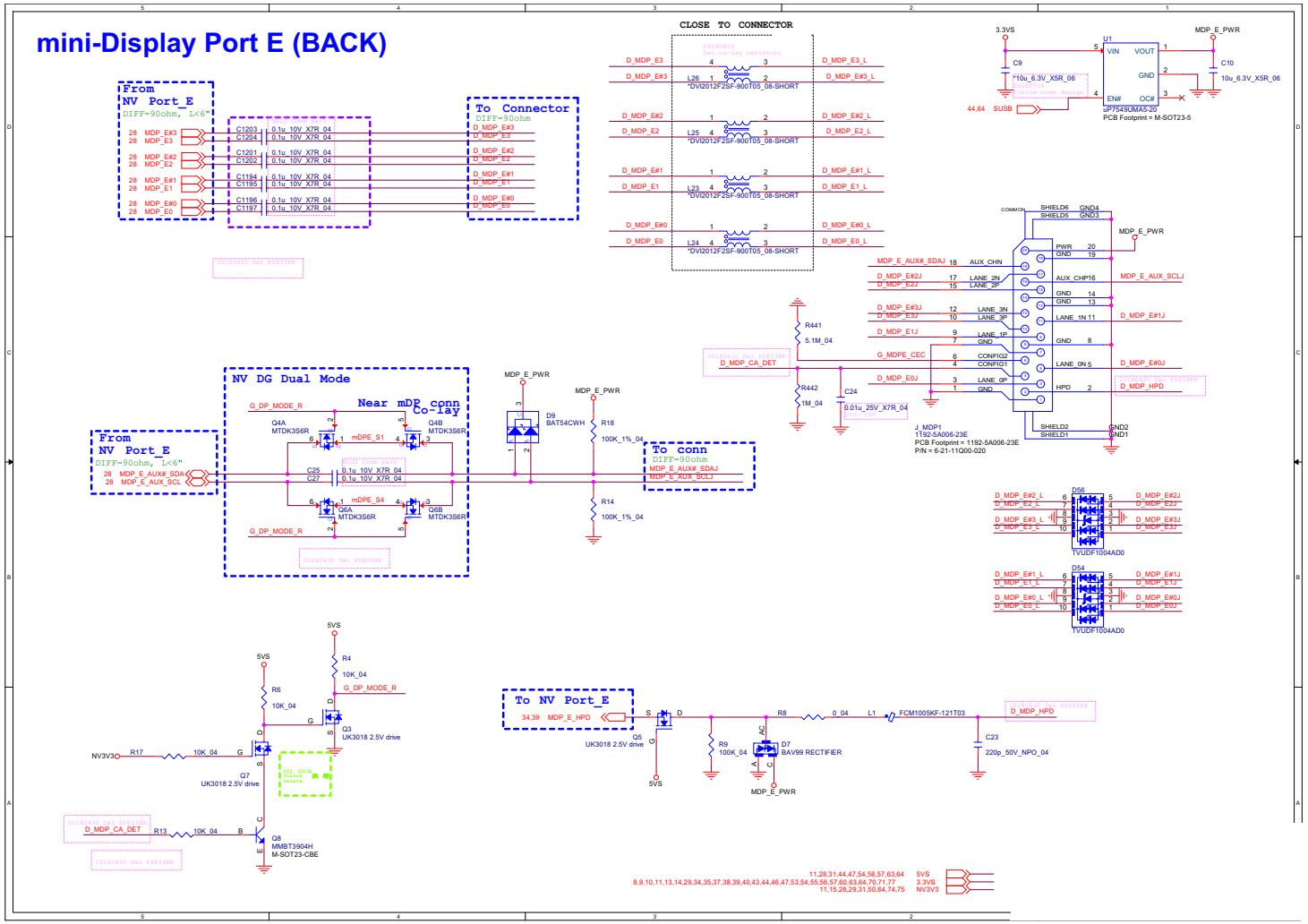

Sheet 12 of 91
Mini DP Port

PS8330B

Sheet 13 of 91
PS8330B

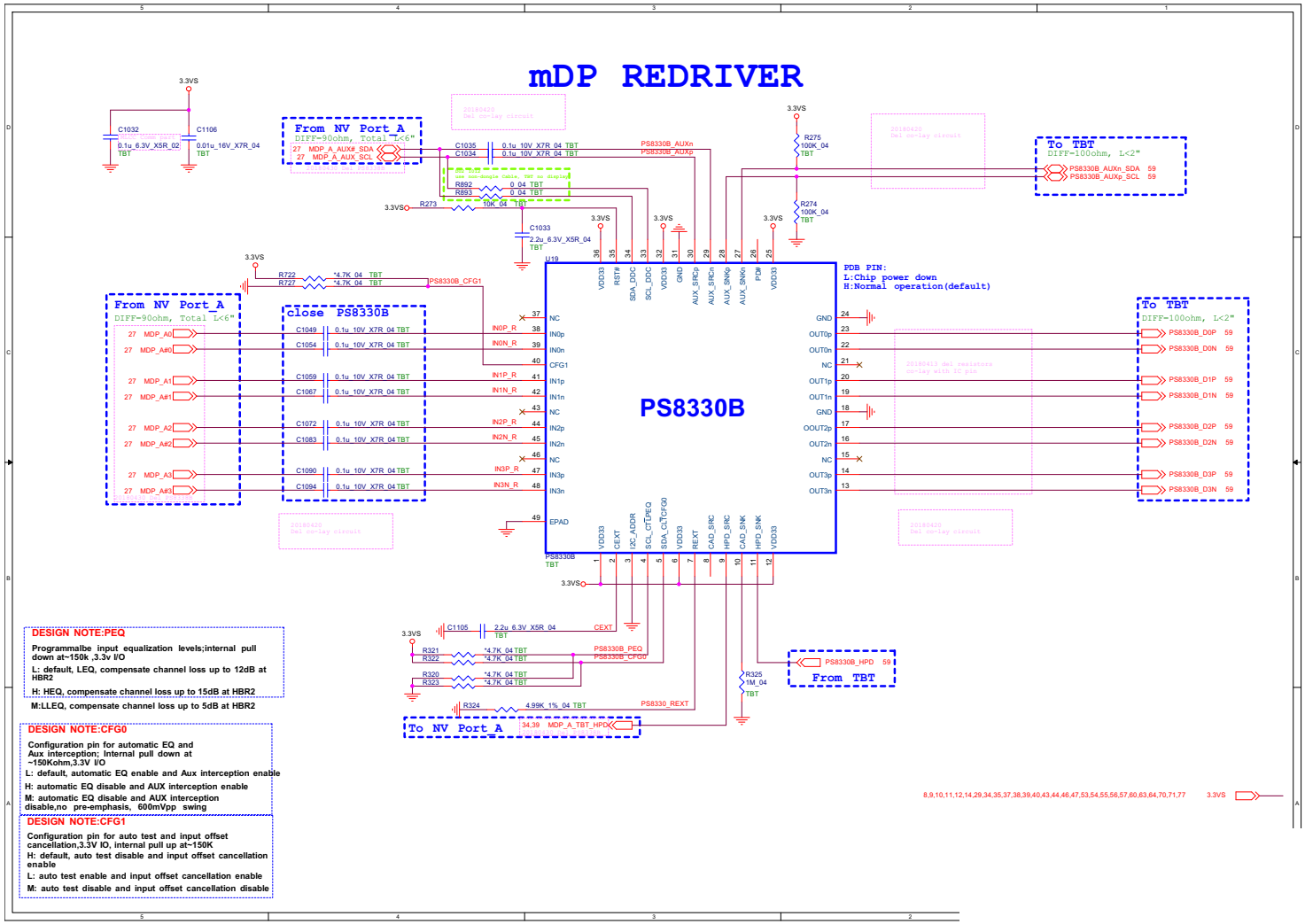

PS8331

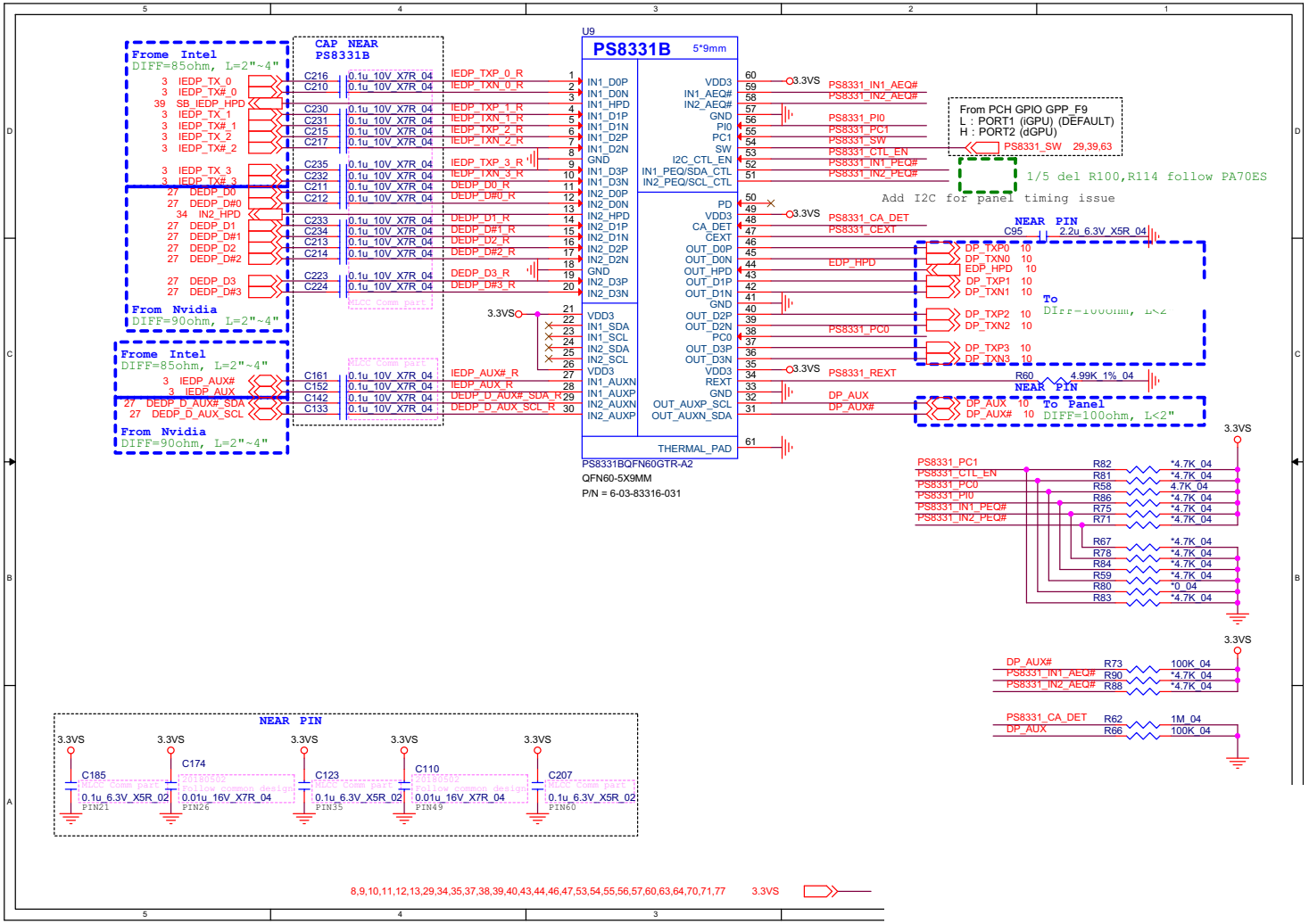

Sheet 14 of 91
PS8331

GPU 1/6

Sheet 15 of 91
GPU 1/6

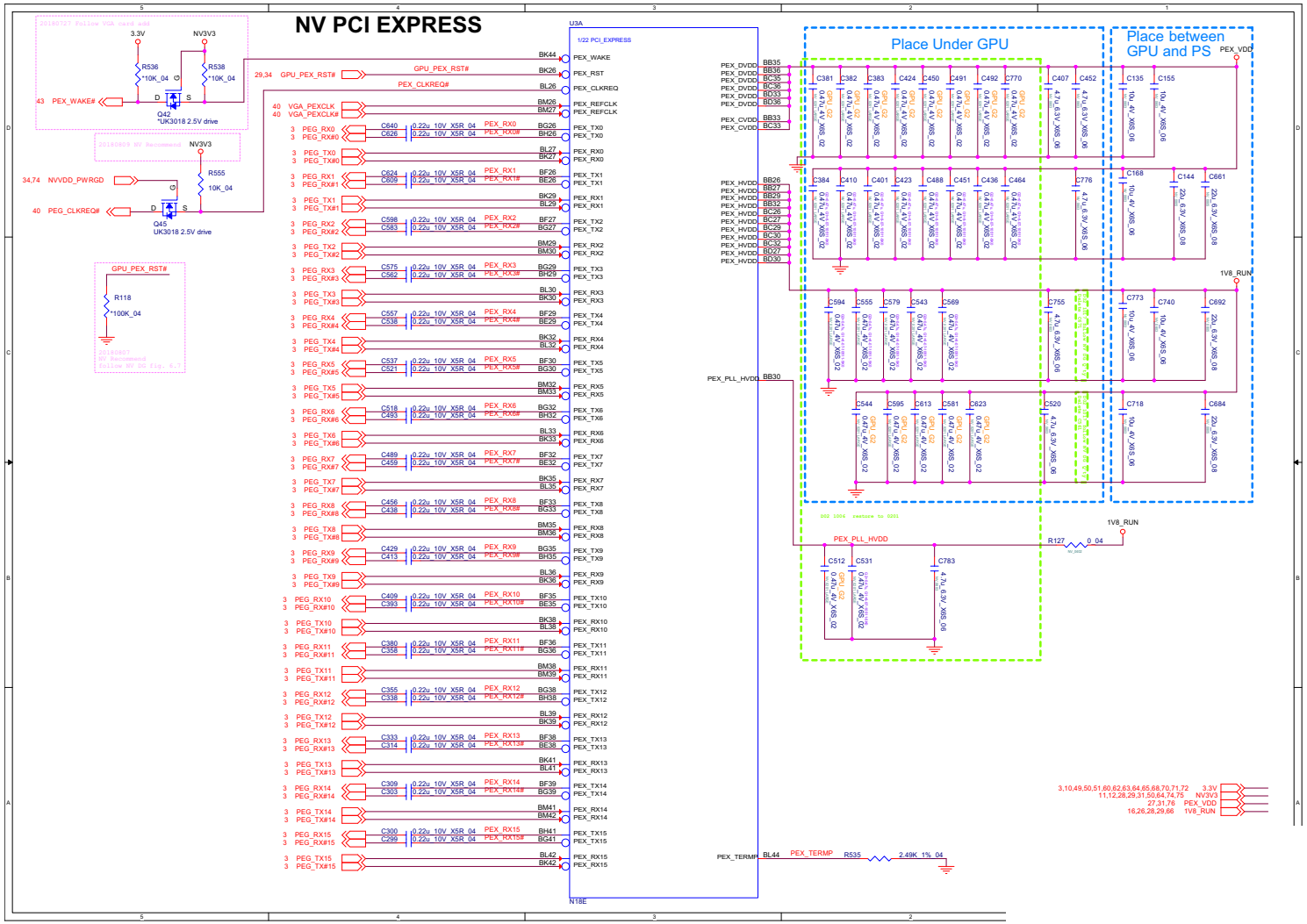

GPU 2/6

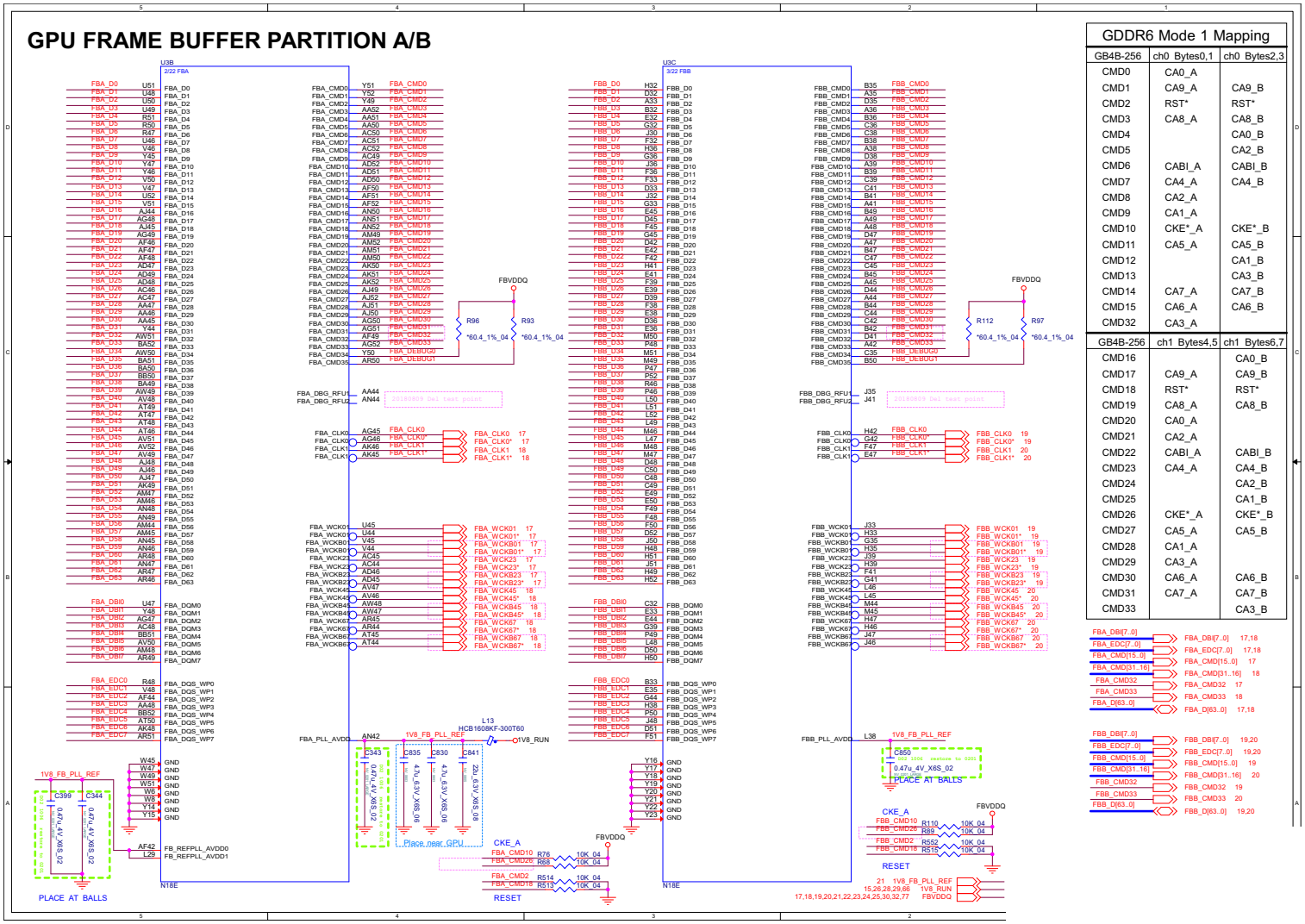

GDDR6 Mode 1 Mapping

GB4B-256	ch0 Bytes0,1	ch0 Bytes2,3
CMD0	CA0_A	
CMD1	CA9_A	CA9_B
CMD2	RST*	RST*
CMD3	CA8_A	CA8_B
CMD4		CA0_B
CMD5		CA2_B
CMD6	CABI_A	CABI_B
CMD7	CA4_A	CA4_B
CMD8	CA2_A	
CMD9	CA1_A	
CMD10	CKE*_A	CKE*_B
CMD11	CA5_A	CA5_B
CMD12		CA1_B
CMD13		CA3_B
CMD14	CA7_A	CA7_B
CMD15	CA6_A	CA6_B
CMD32	CA3_A	
GB4B-256	**ch1 Bytes4,5**	**ch1 Bytes6,7**
CMD16		CA0_B
CMD17	CA9_A	CA9_B
CMD18	RST*	RST*
CMD19	CA8_A	CA8_B
CMD20	CA0_A	
CMD21	CA2_A	
CMD22	CABI_A	CABI_B
CMD23	CA4_A	CA4_B
CMD24		CA2_B
CMD25		CA1_B
CMD26	CKE*_A	CKE*_B
CMD27	CA5_A	CA5_B
CMD28	CA1_A	
CMD29	CA3_A	
CMD30	CA6_A	CA6_B
CMD31	CA7_A	CA7_B
CMD33		CA3_B

Sheet 16 of 91
GPU 2/6

Frame Buffer Partition A

Sheet 17 of 91
Frame Buffer Partition A

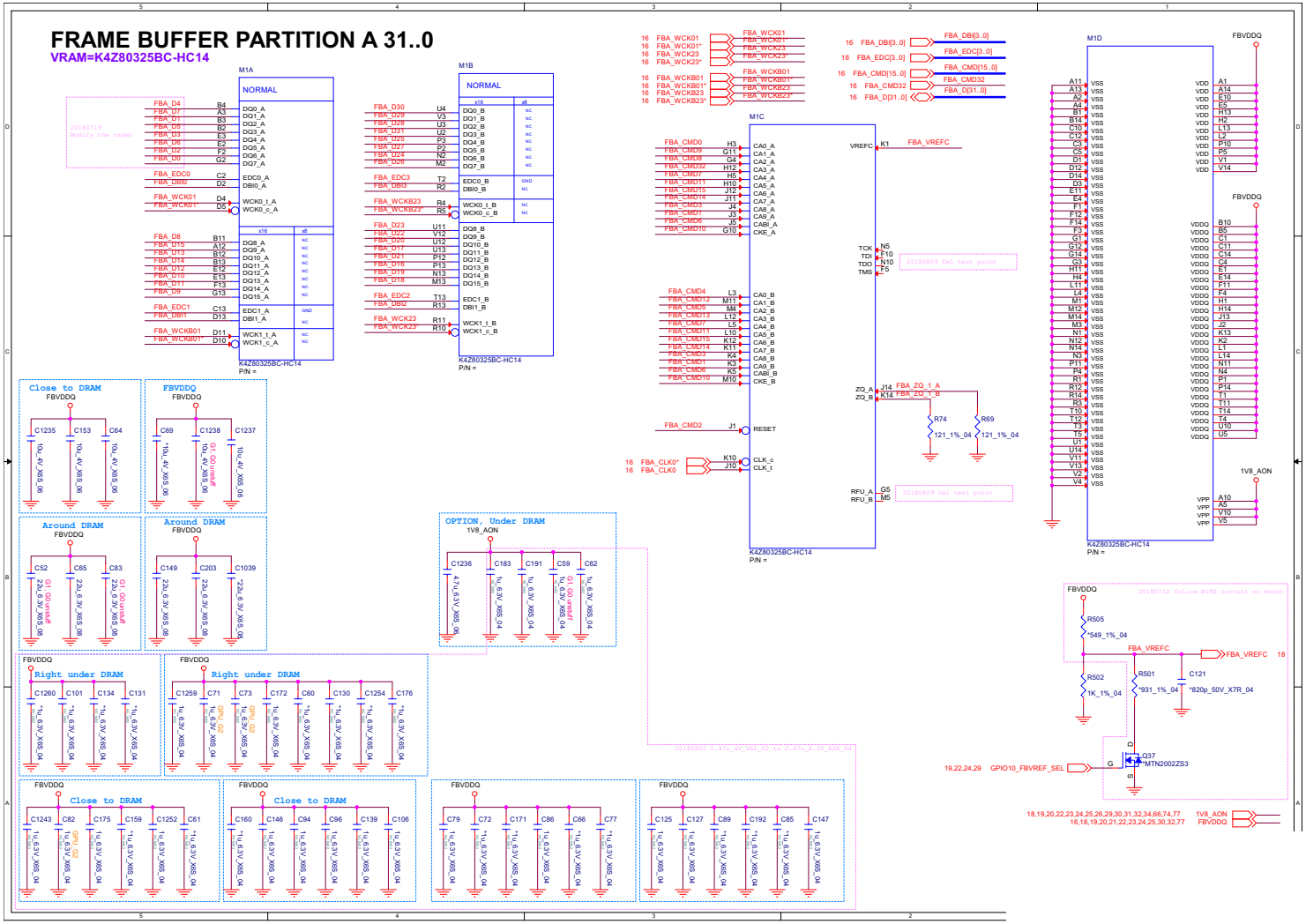

Frame Buffer Partition A

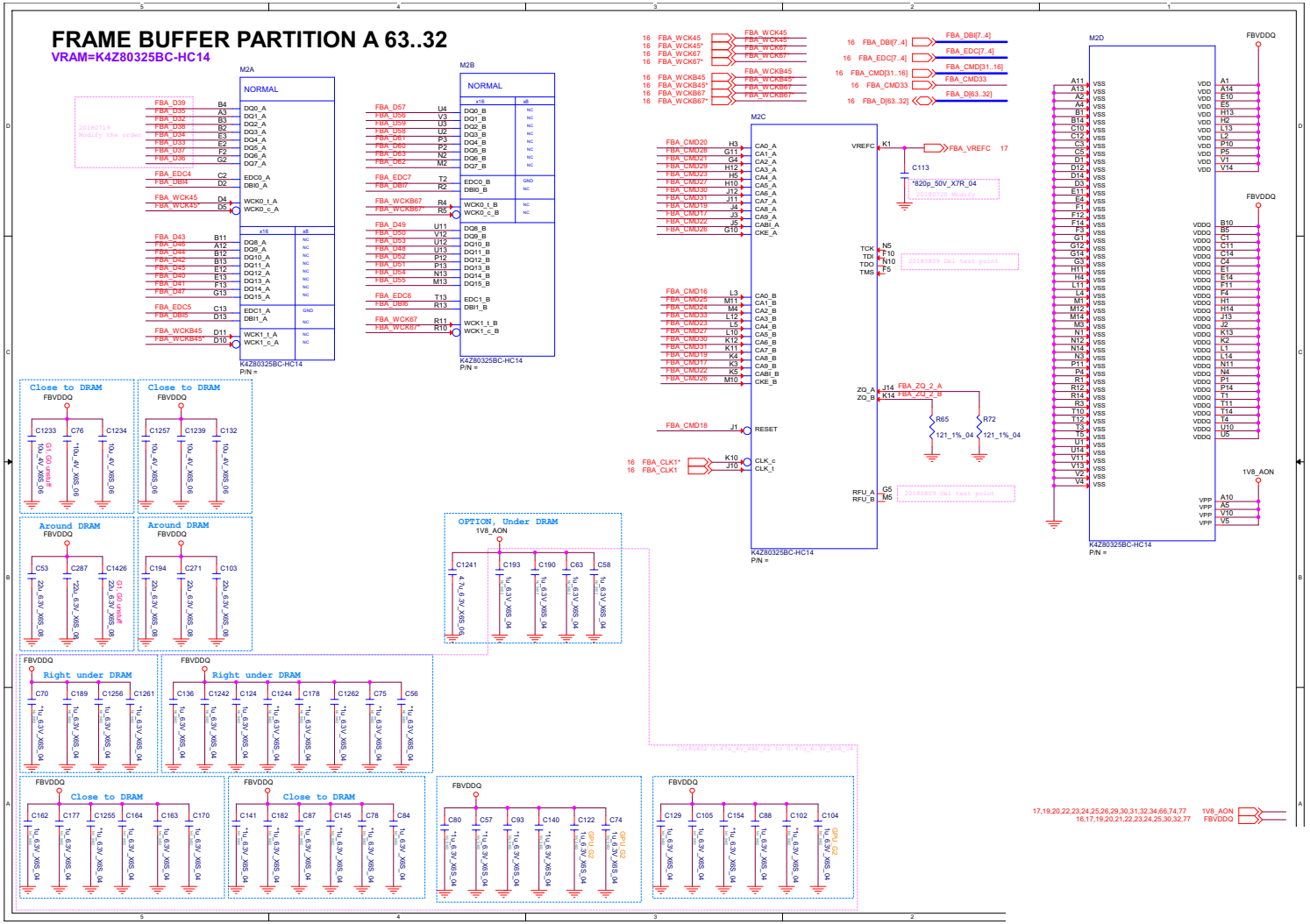

Sheet 18 of 91
Frame Buffer
Partition A

Frame Buffer Partition B

Sheet 19 of 91
Frame Buffer Partition B

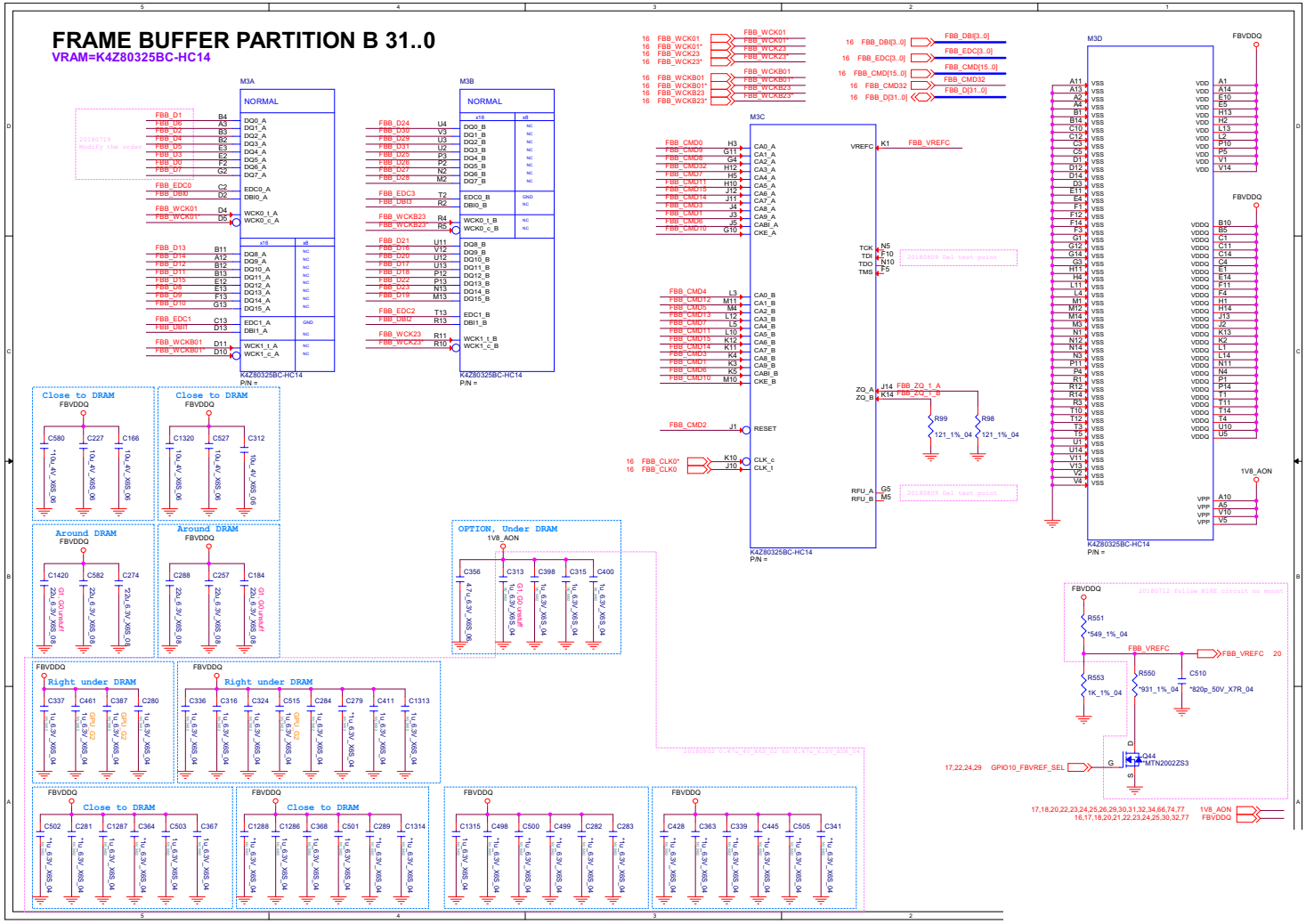

Frame Buffer Partition B

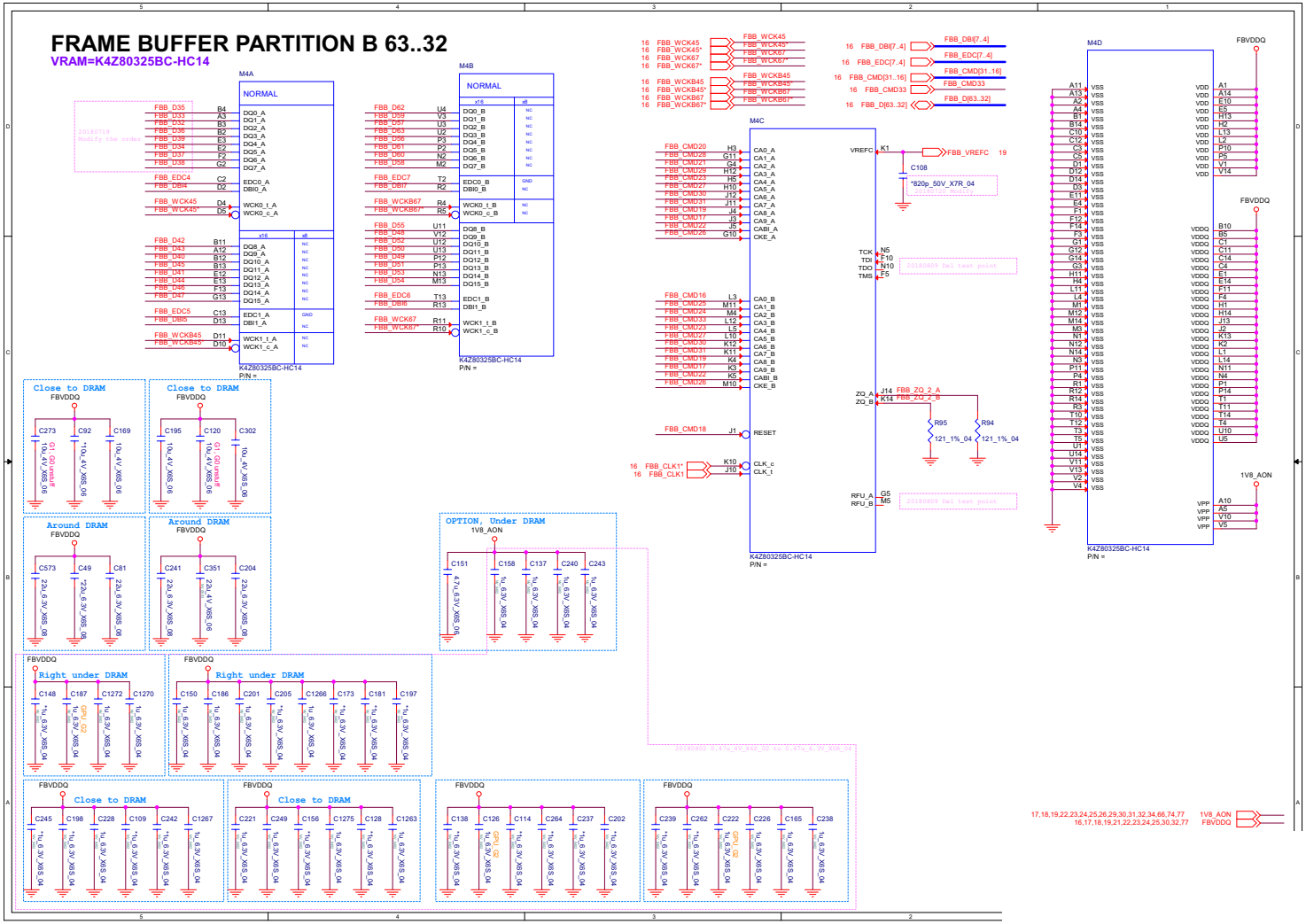

Sheet 20 of 91
Frame Buffer
Partition B

GPU 3/6

Sheet 21 of 91
GPU 3/6

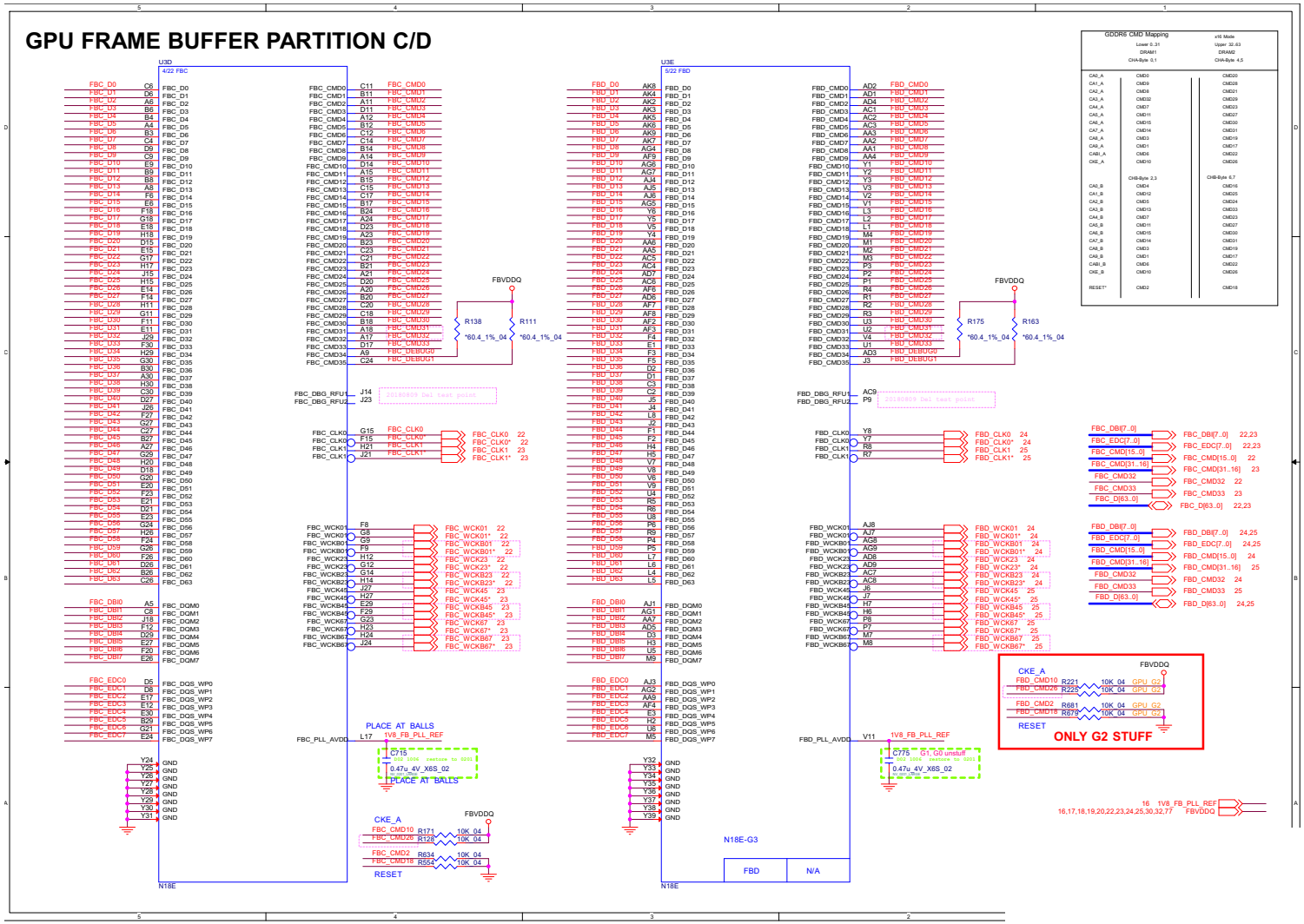

Frame Buffer Partition C

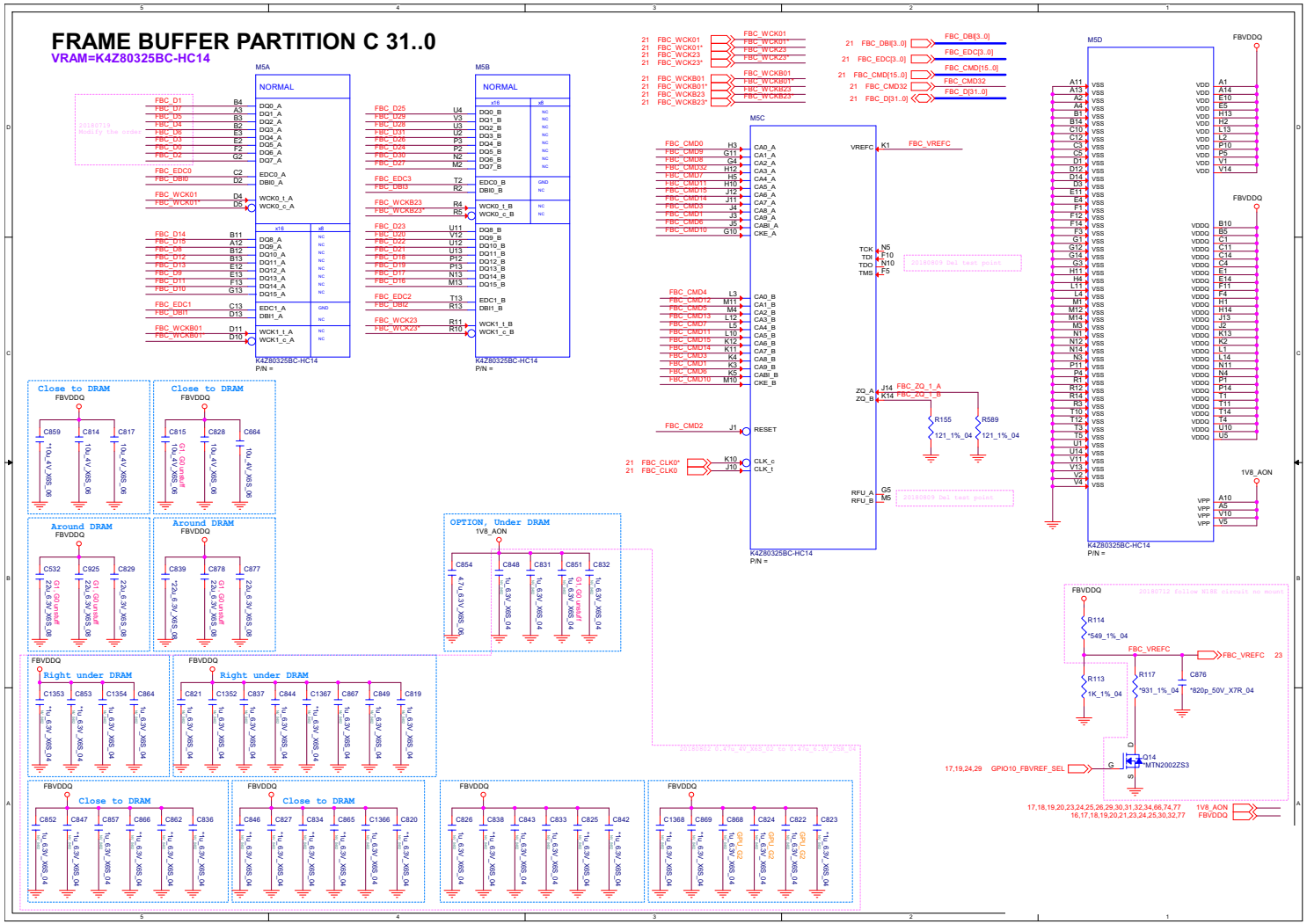

Sheet 22 of 91
Frame Buffer
Partition C

Frame Buffer Partition C

Sheet 23 of 91
Frame Buffer Partition C

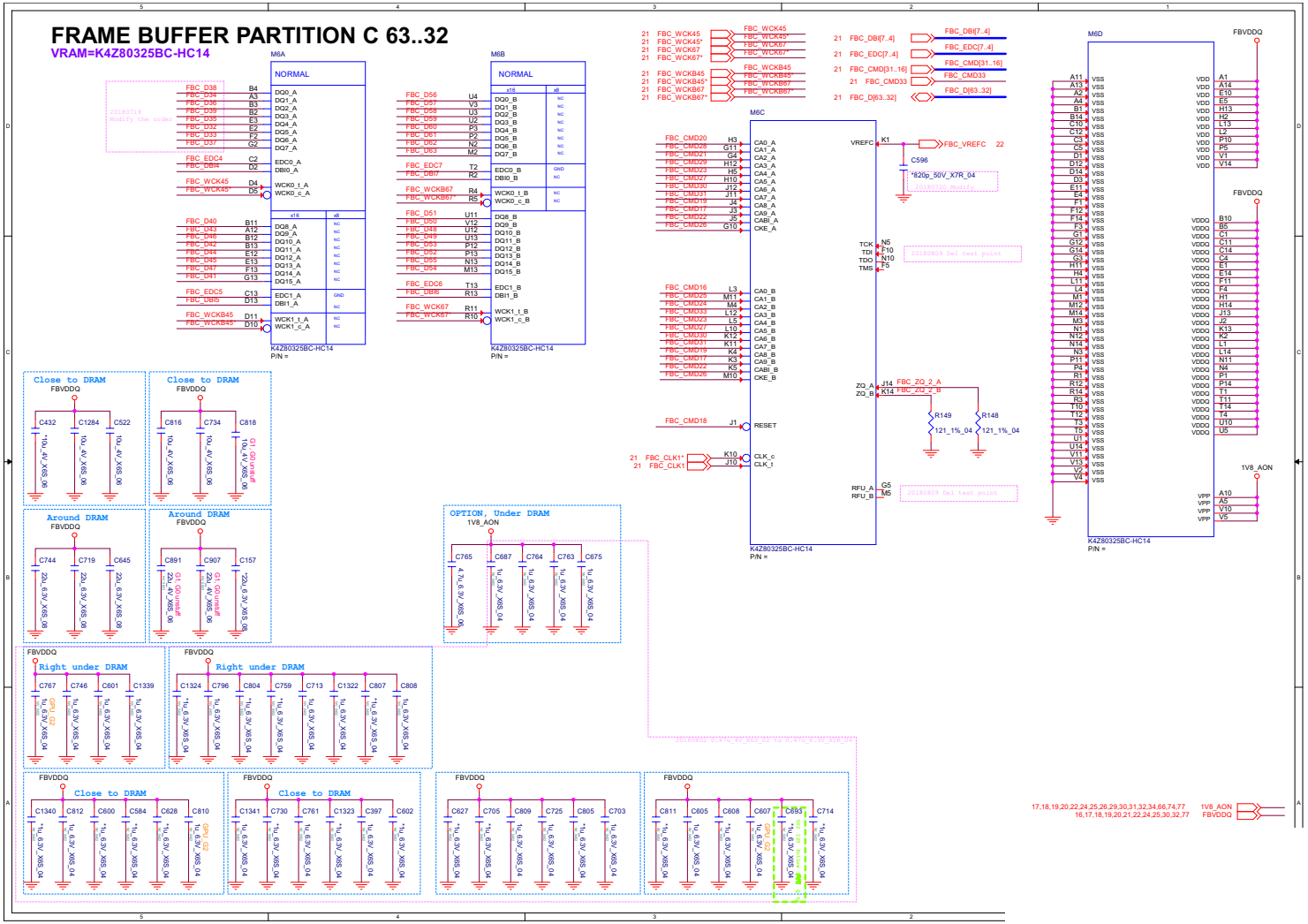

Frame Buffer Partition D

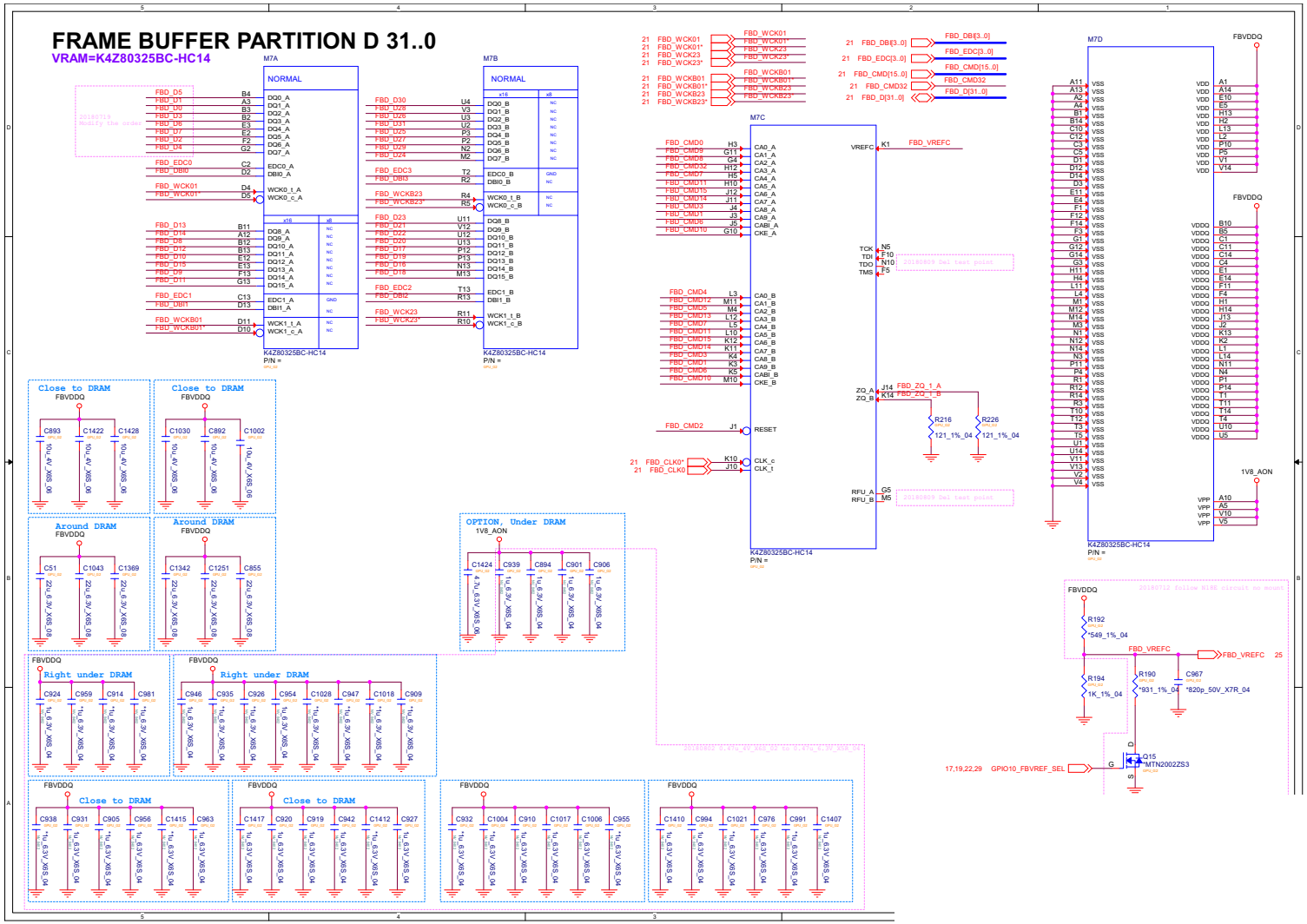

Sheet 24 of 91
Frame Buffer
Partition D

Frame Buffer Partition D

Sheet 25 of 91
Frame Buffer Partition D

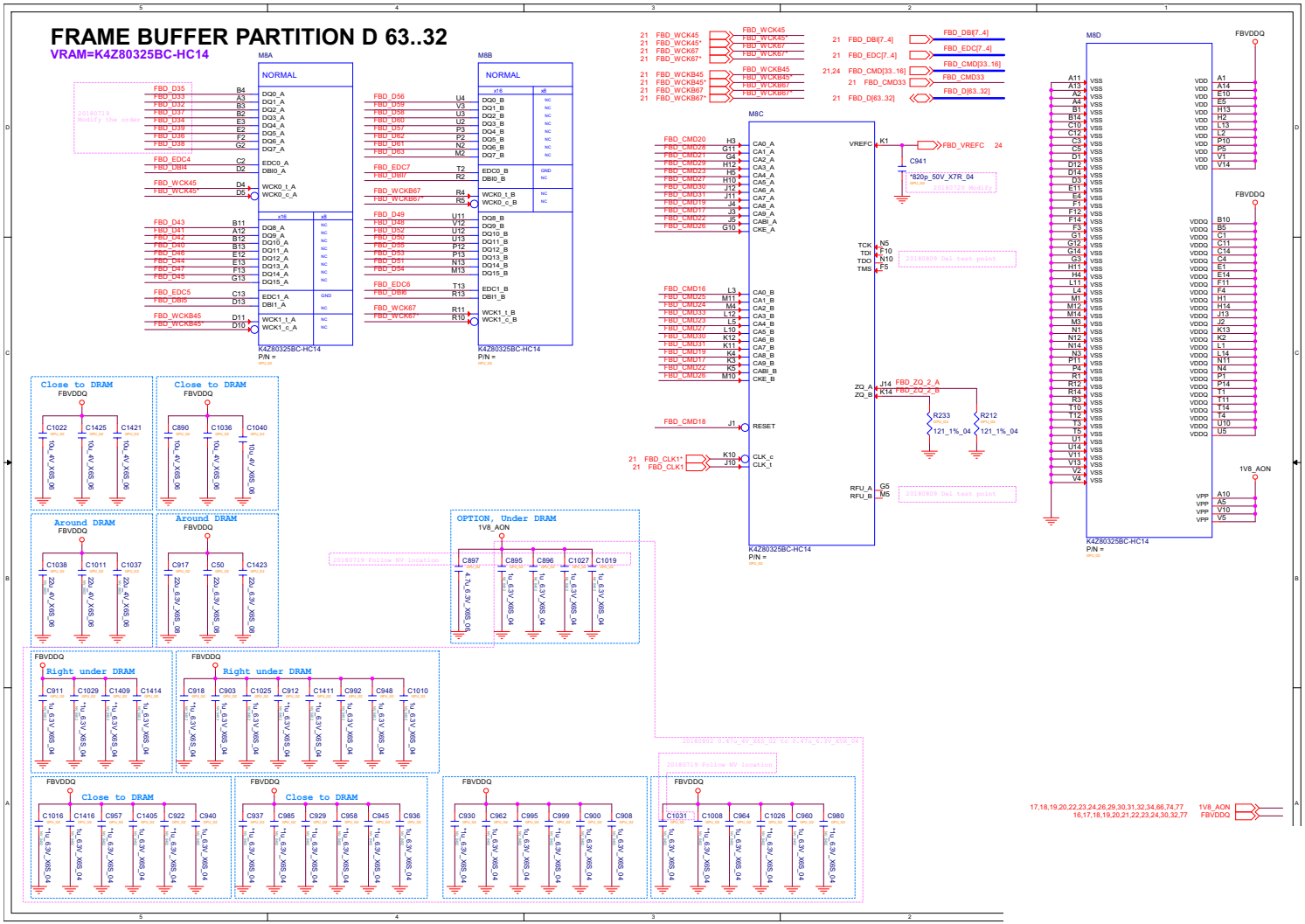

GPU 4/6

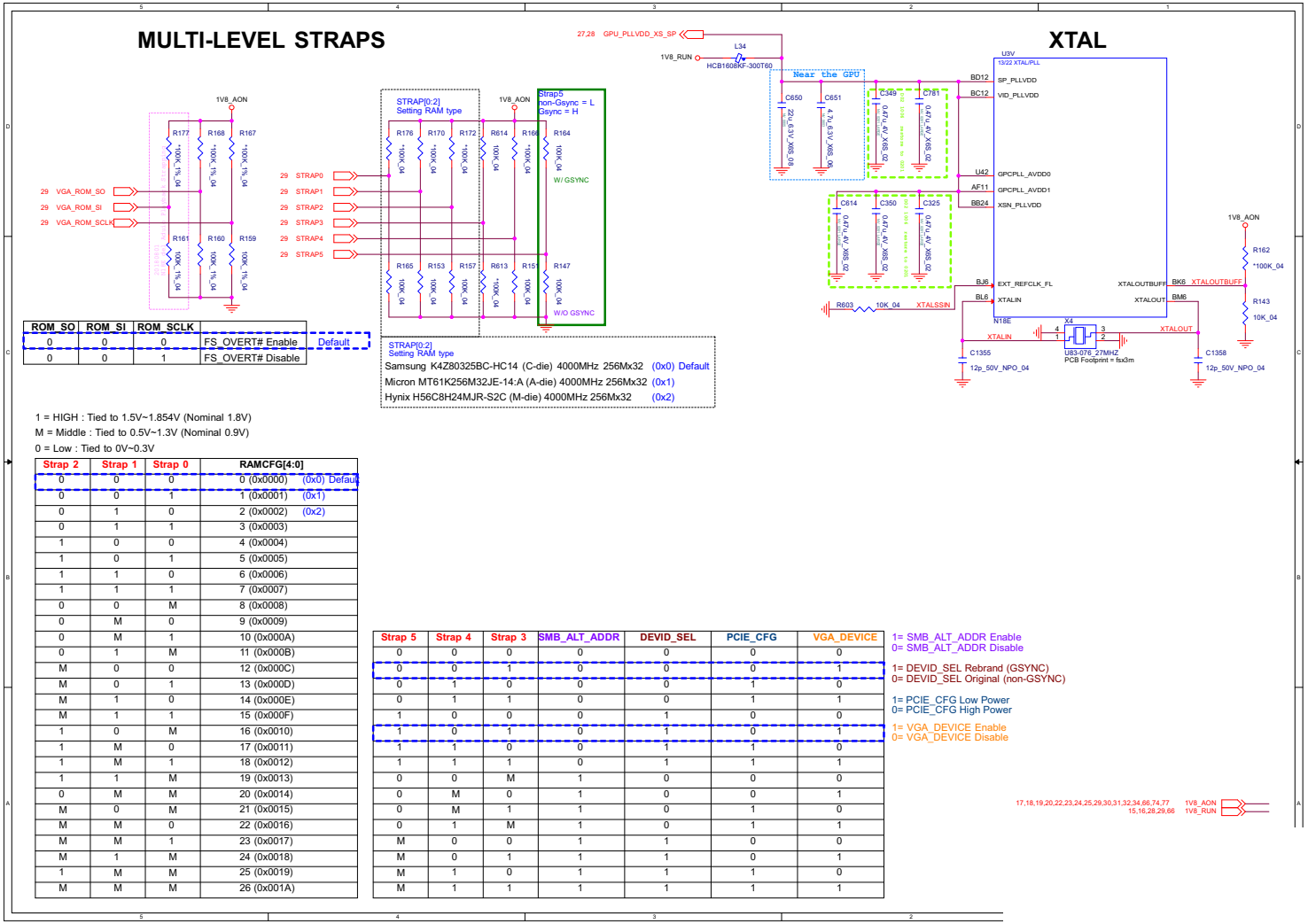

ROM_SO	ROM_SI	ROM_SCLK		
0	0	0	FS_OVERT# Enable	Default
0	0	1	FS_OVERT# Disable	

Strap 2	Strap 1	Strap 0	RAMCFG[4:0]	
0	0	0	0 (0x0000)	(0x0) Default
0	0	1	1 (0x0001)	(0x1)
0	1	0	2 (0x0002)	(0x2)
0	1	1	3 (0x0003)	
1	0	0	4 (0x0004)	
1	0	1	5 (0x0005)	
1	1	0	6 (0x0006)	
1	1	1	7 (0x0007)	
0	0	M	8 (0x0008)	
0	M	0	9 (0x0009)	
0	M	1	10 (0x000A)	
0	1	M	11 (0x000B)	
M	0	0	12 (0x000C)	
M	0	1	13 (0x000D)	
M	1	0	14 (0x000E)	
M	1	1	15 (0x000F)	
1	0	M	16 (0x0010)	
1	M	0	17 (0x0011)	
1	M	1	18 (0x0012)	
1	1	M	19 (0x0013)	
0	M	M	20 (0x0014)	
M	0	M	21 (0x0015)	
M	M	0	22 (0x0016)	
M	M	1	23 (0x0017)	
M	1	M	24 (0x0018)	
1	M	M	25 (0x0019)	
M	M	M	26 (0x001A)	

Strap 5	Strap 4	Strap 3	SMB_ALT_ADDR	DEVID_SEL	PCIE_CFG	VGA_DEVICE
0	0	0	0	0	0	0
0	0	1	0	0	0	1
0	1	0	0	0	1	0
0	1	1	0	0	1	1
1	0	0	0	1	0	0
1	0	1	0	1	0	1
1	1	0	0	1	1	0
1	1	1	0	1	1	1
0	0	M	1	0	0	0
0	M	0	1	0	0	1
0	M	1	1	0	1	0
0	1	M	1	0	1	1
M	0	0	1	1	0	0
M	0	1	1	1	0	1
M	1	0	1	1	1	0
M	1	1	1	1	1	1

Sheet 26 of 91
GPU 4/6

GPU 5/6

Sheet 27 of 91
GPU 5/6

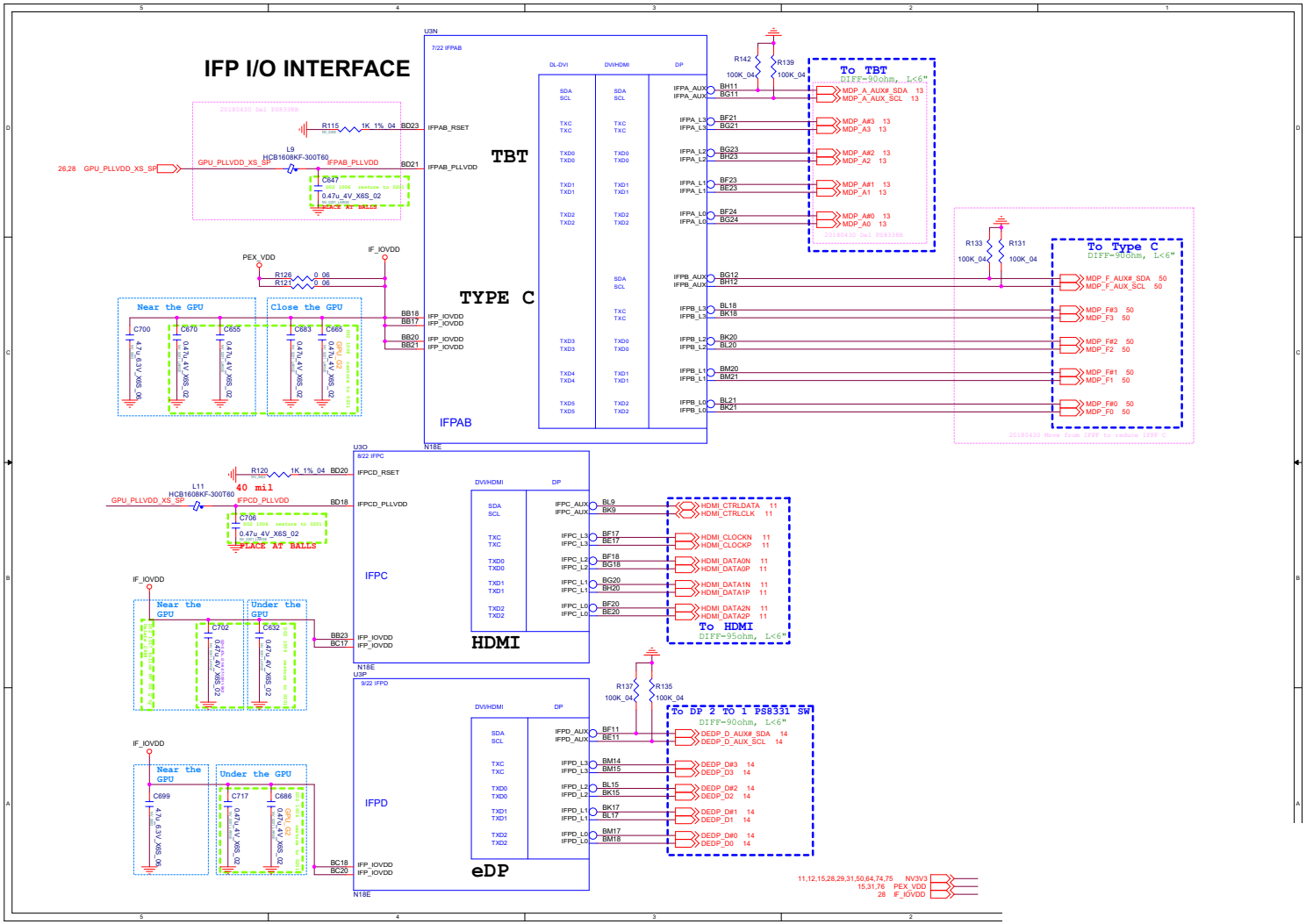

IFP I/O Interface

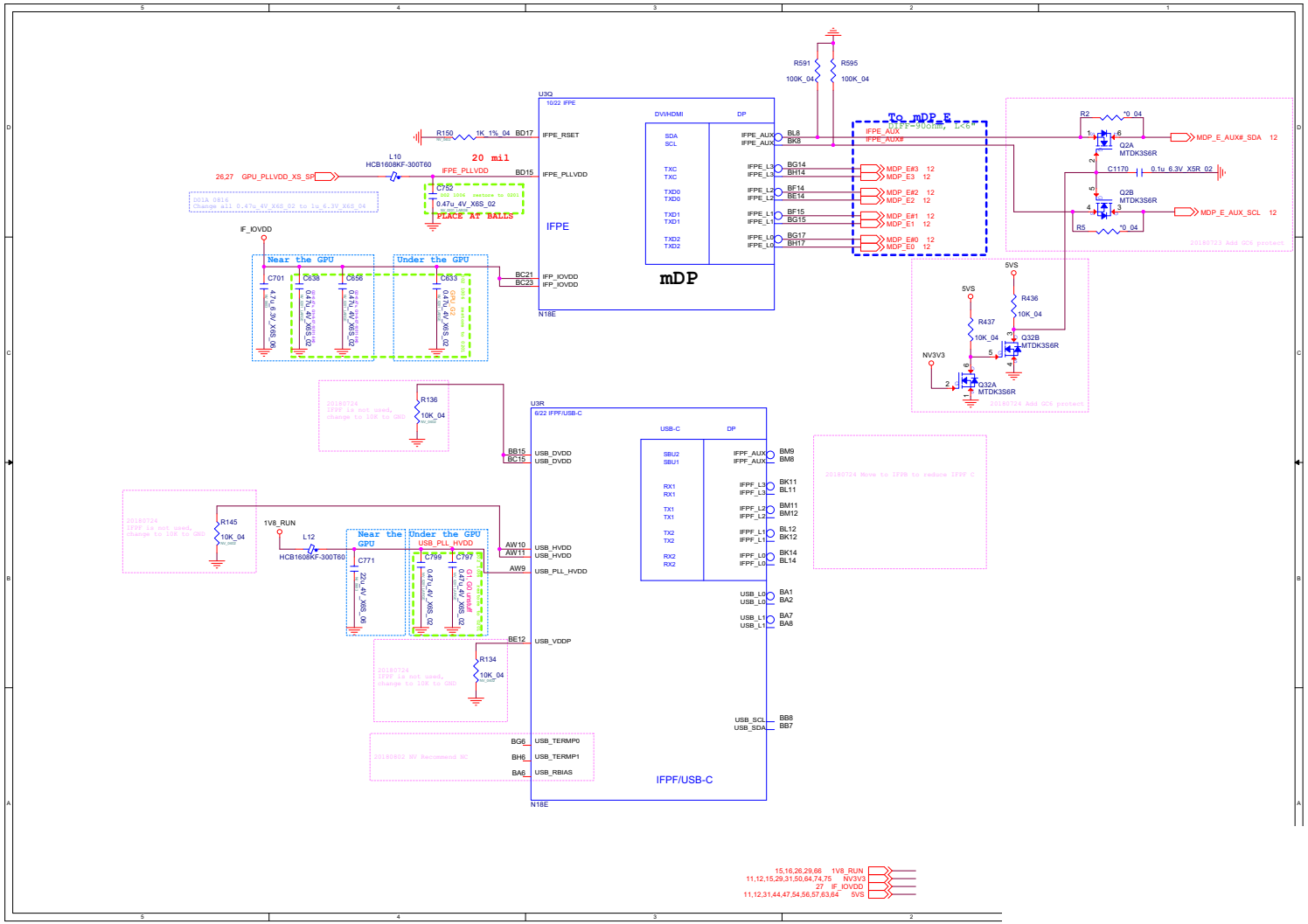

Sheet 28 of 91
IFP I/O Interface

GPU 6/6

Sheet 29 of 91
GPU 6/6

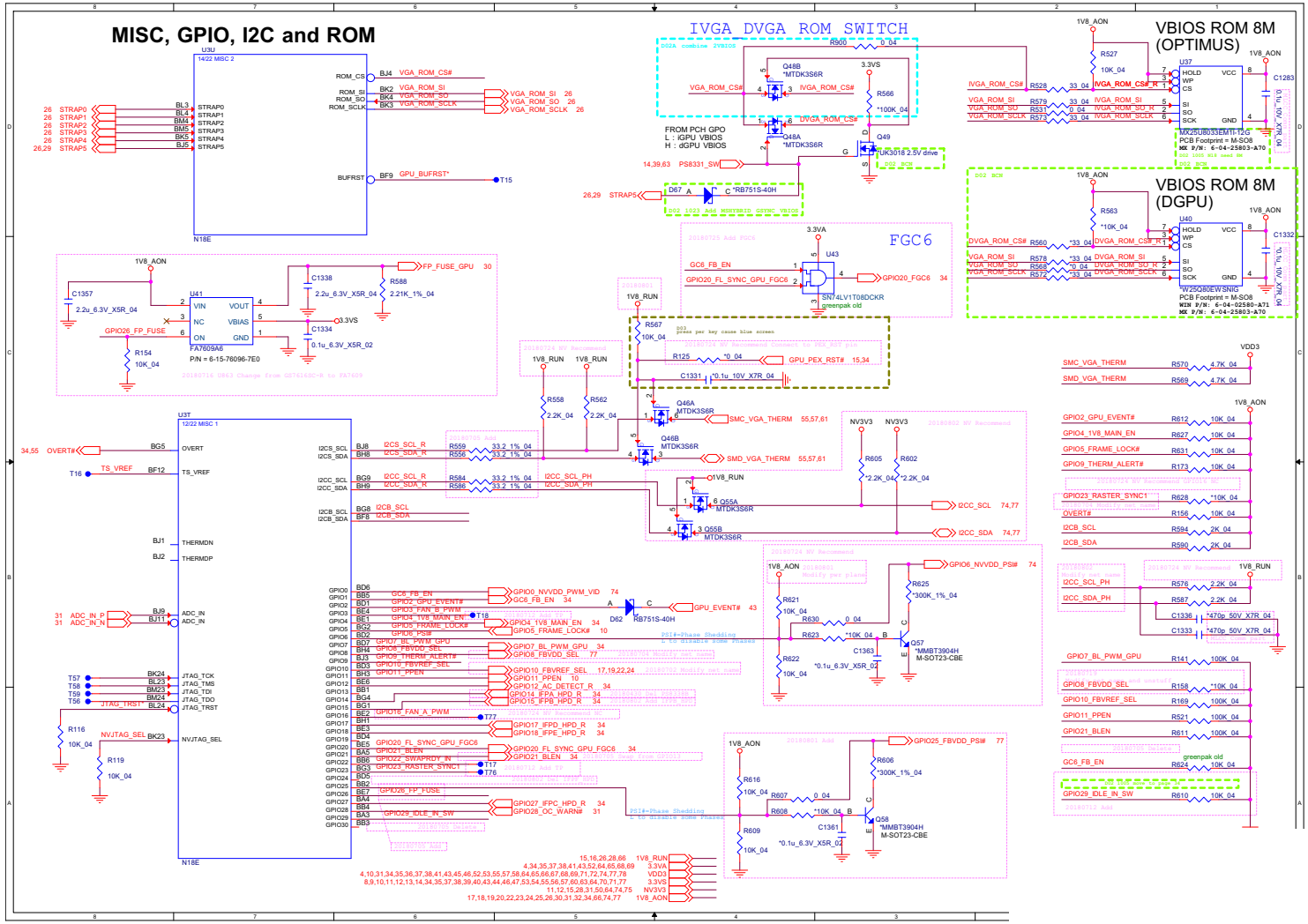

GPU NVVDD, FBVDDQ

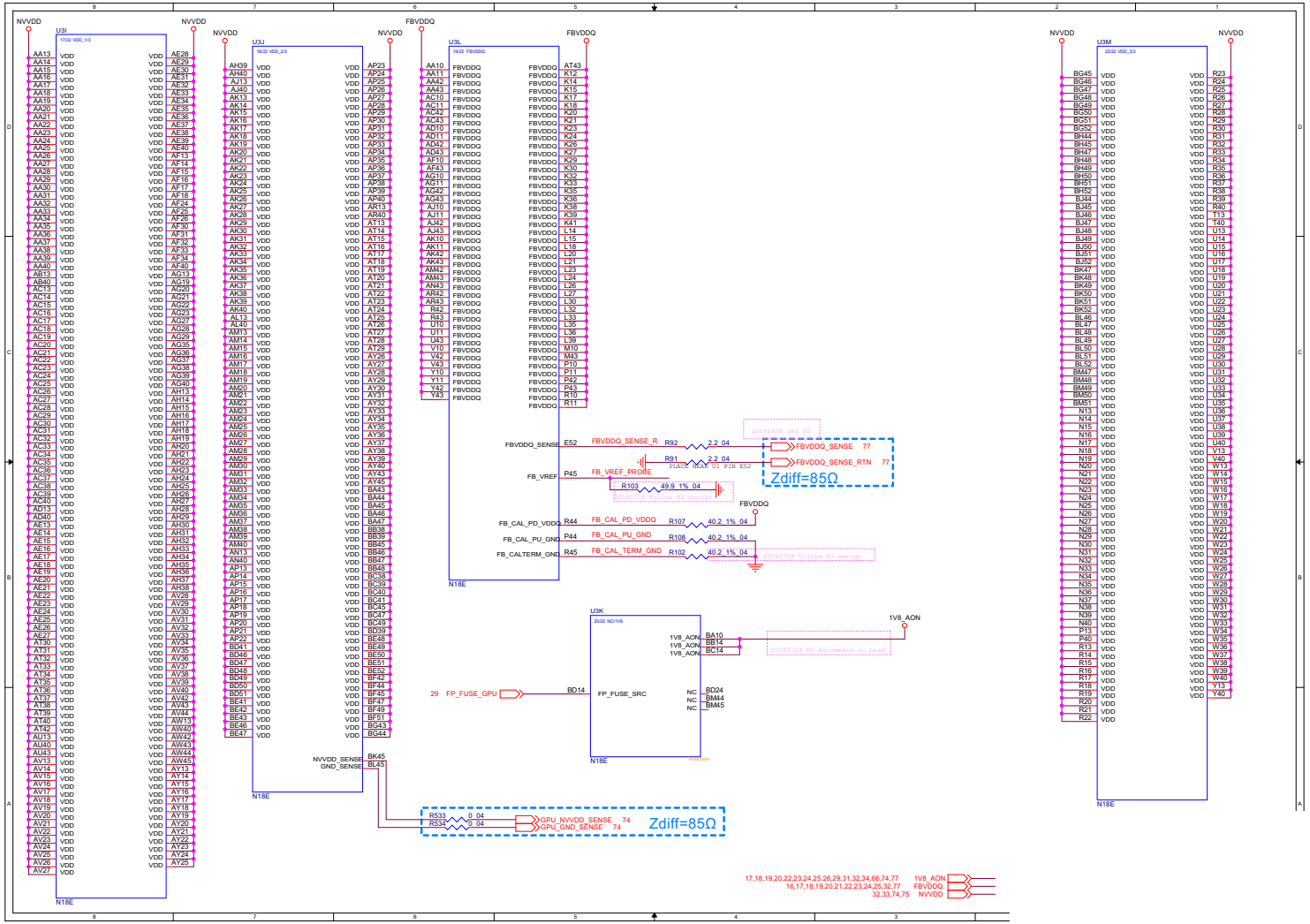

Sheet 30 of 91
GPU NVVDD, FBVDDQ

GPU GND

Sheet 31 of 91
GPU GND

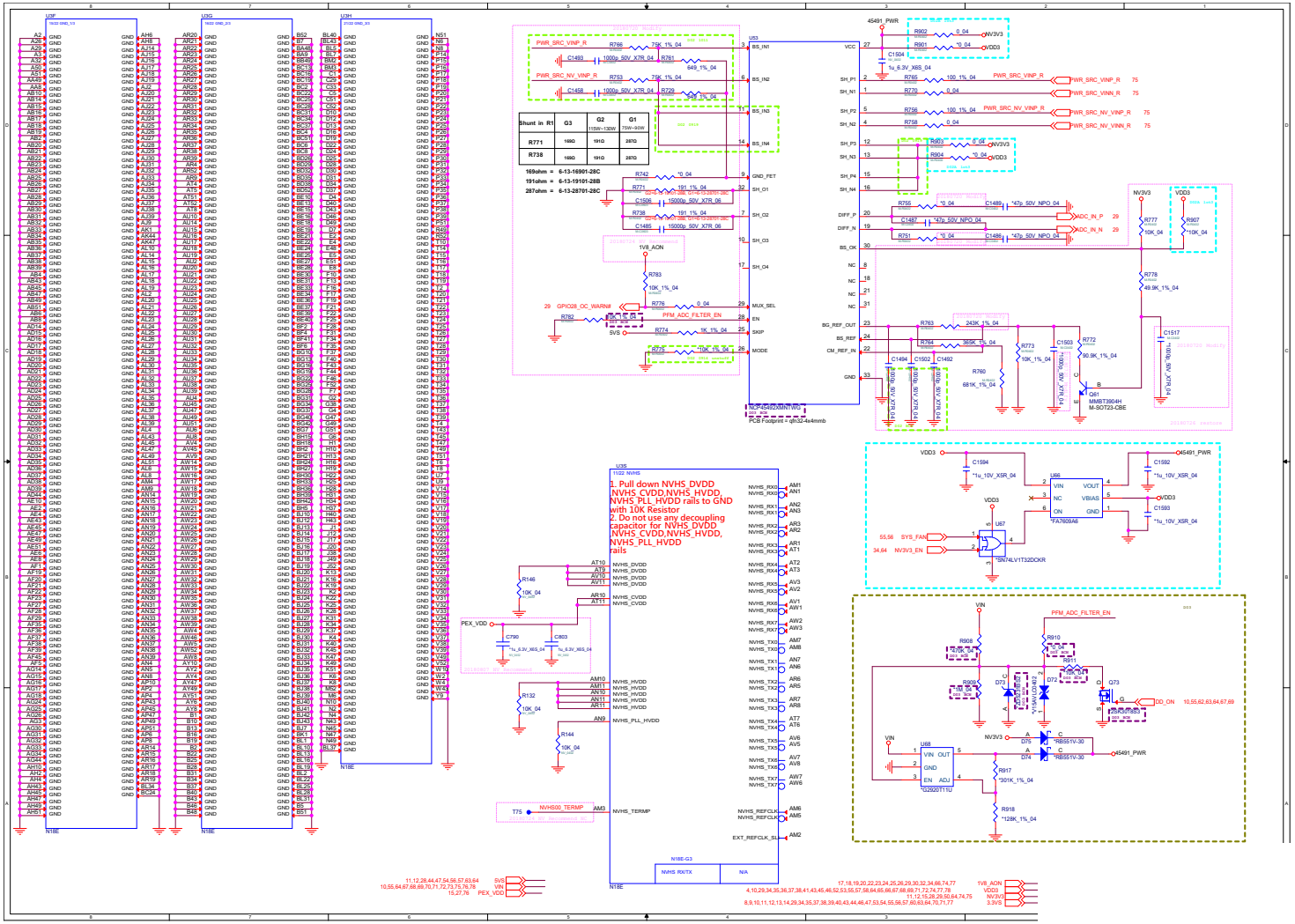

GPU Decoupling

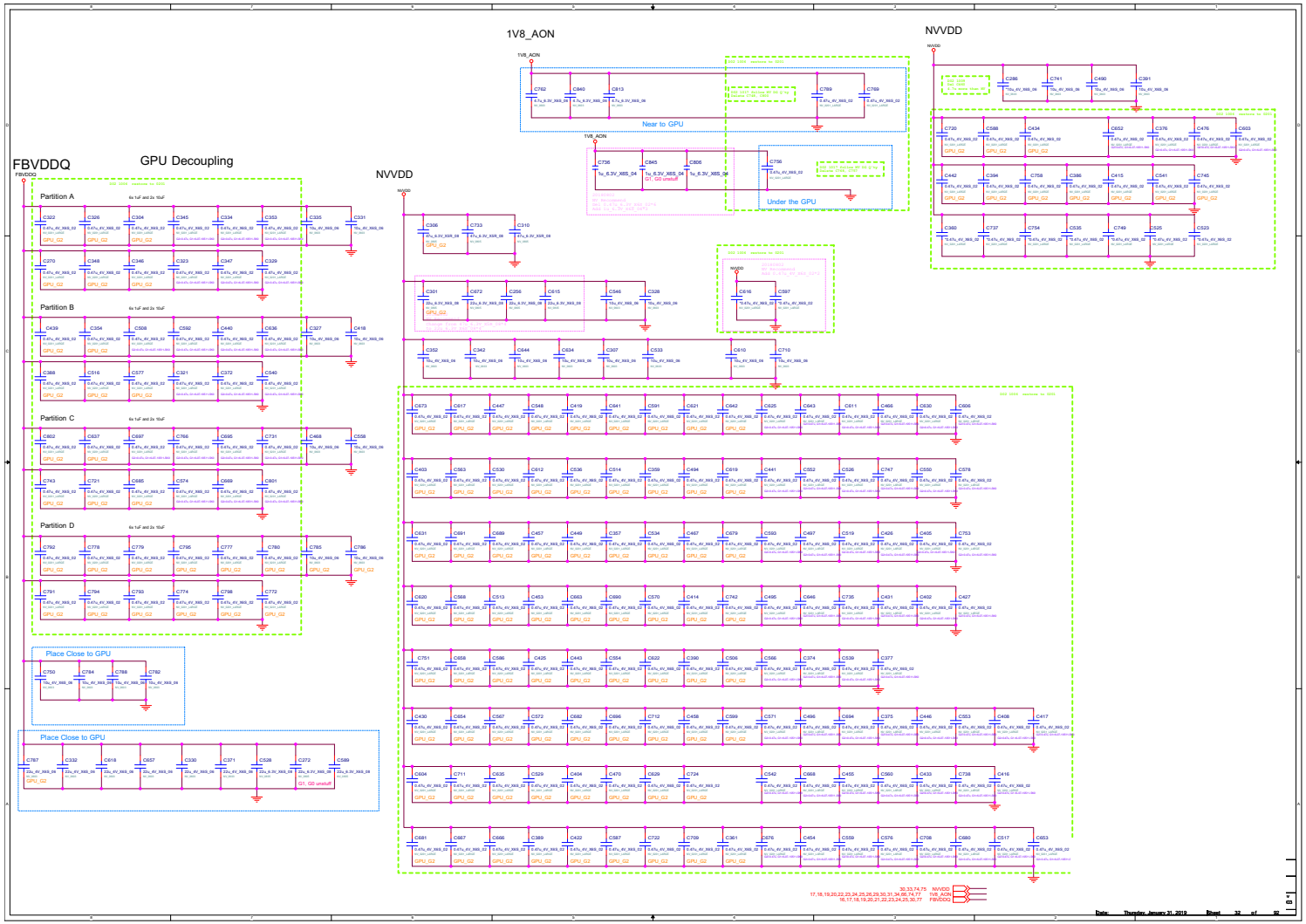

Sheet 32 of 91
GPU Decoupling

GPU Decoupling 2

Sheet 33 of 91
GPU Decoupling 2

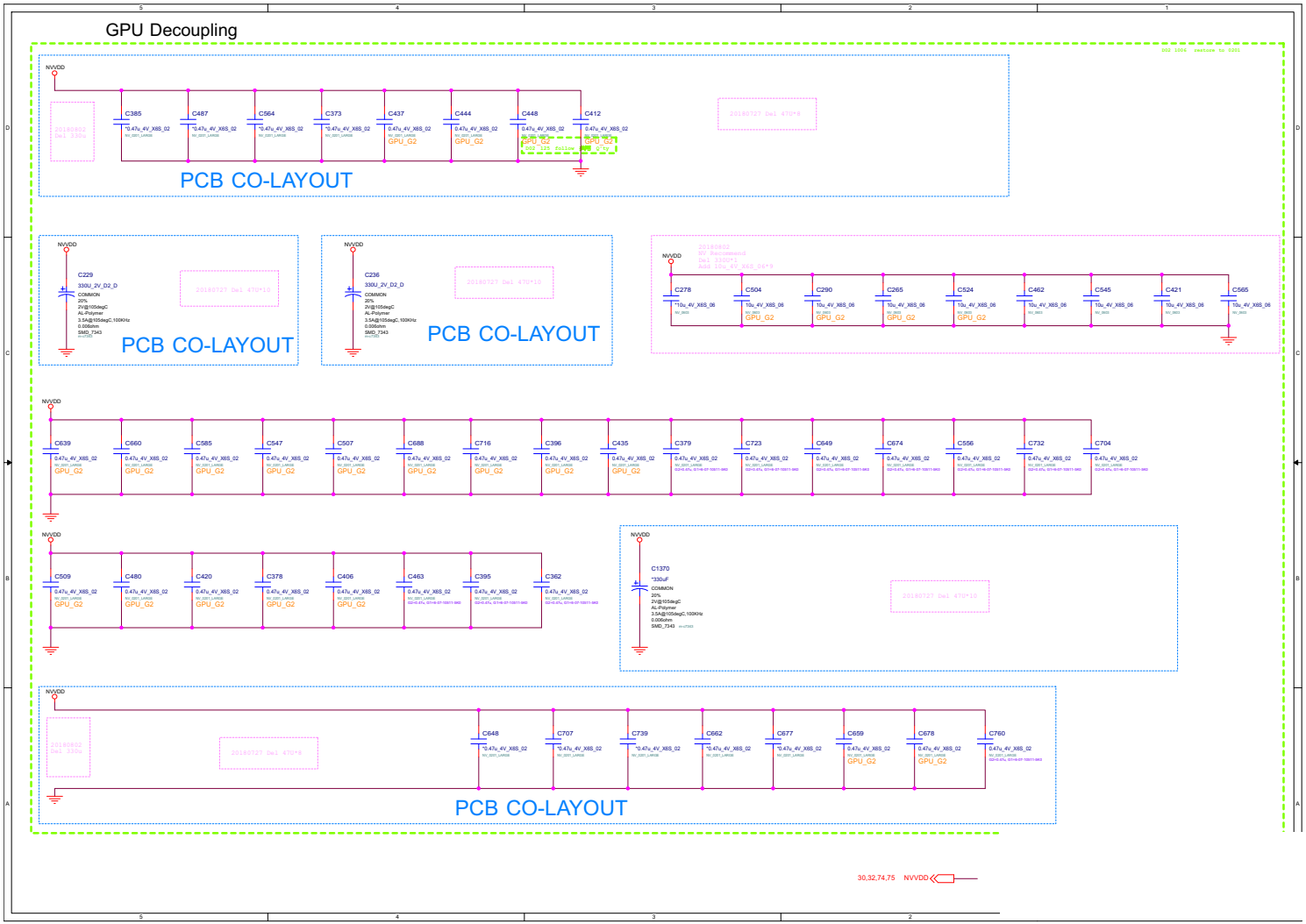

GPU Pwr Ctrl, Level Shift

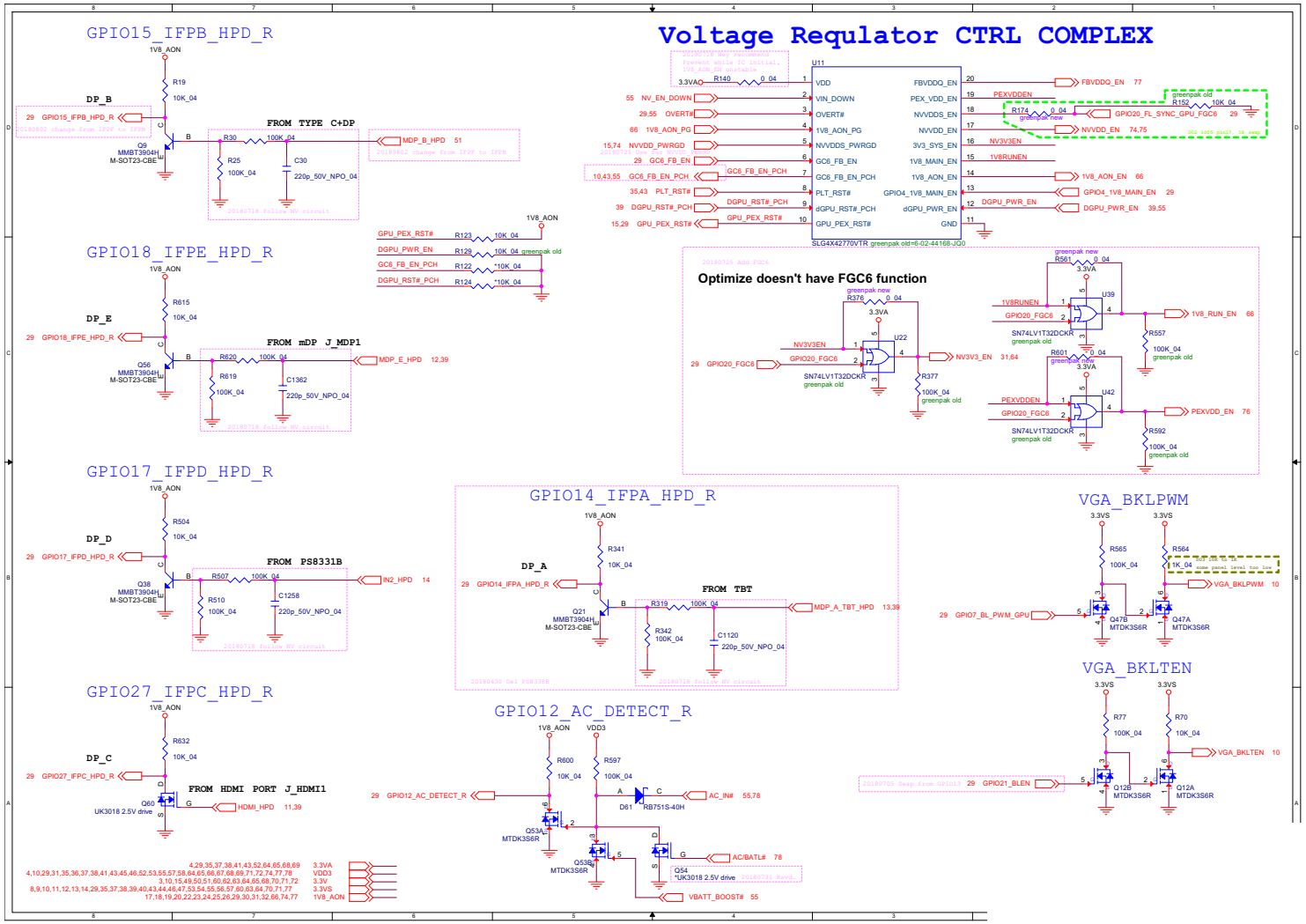

Sheet 34 of 91
GPU Pwr Ctrl, Level Shift

PCH 1/9

Sheet 35 of 91
PCH 1/9

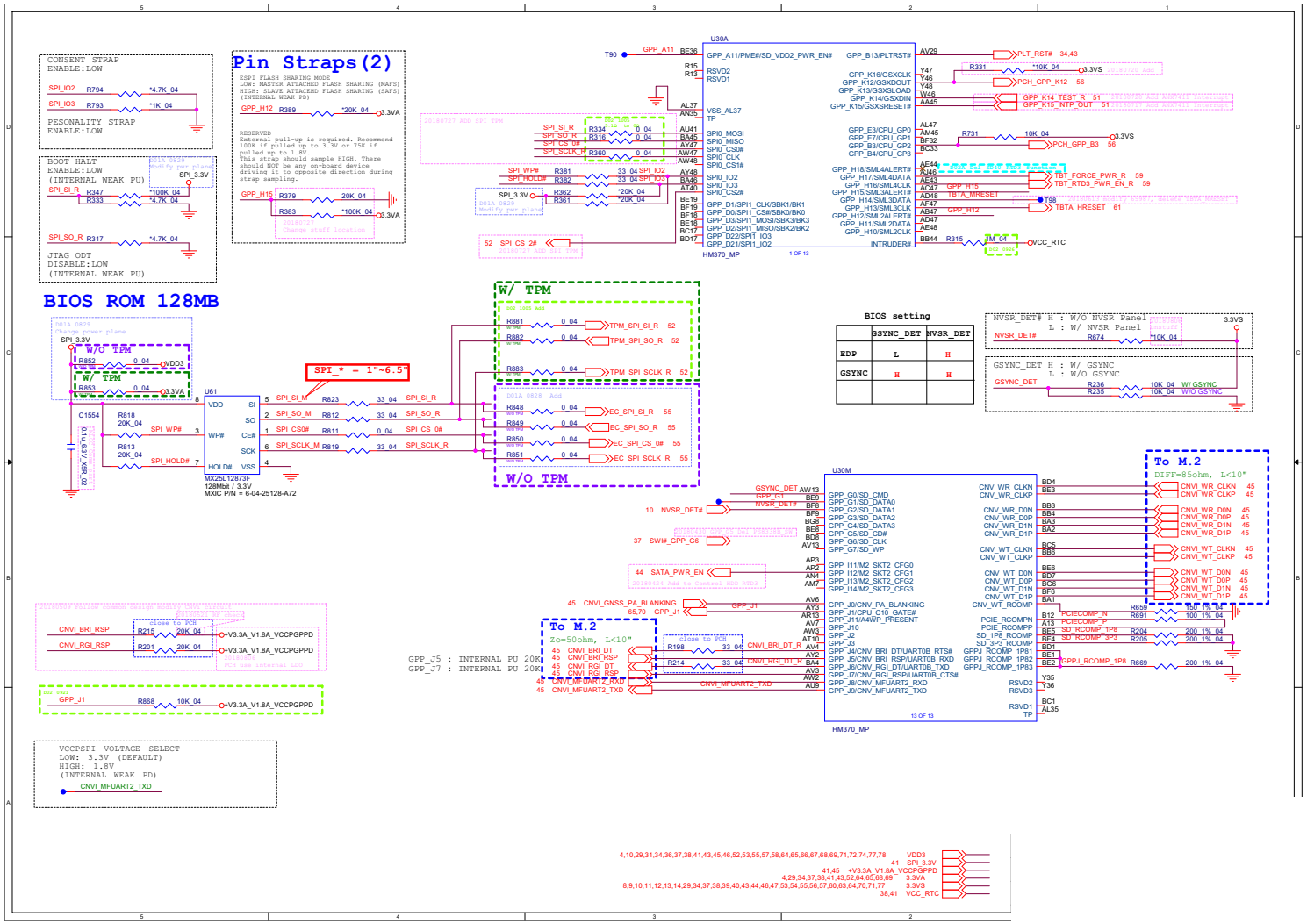

PCH 2/9

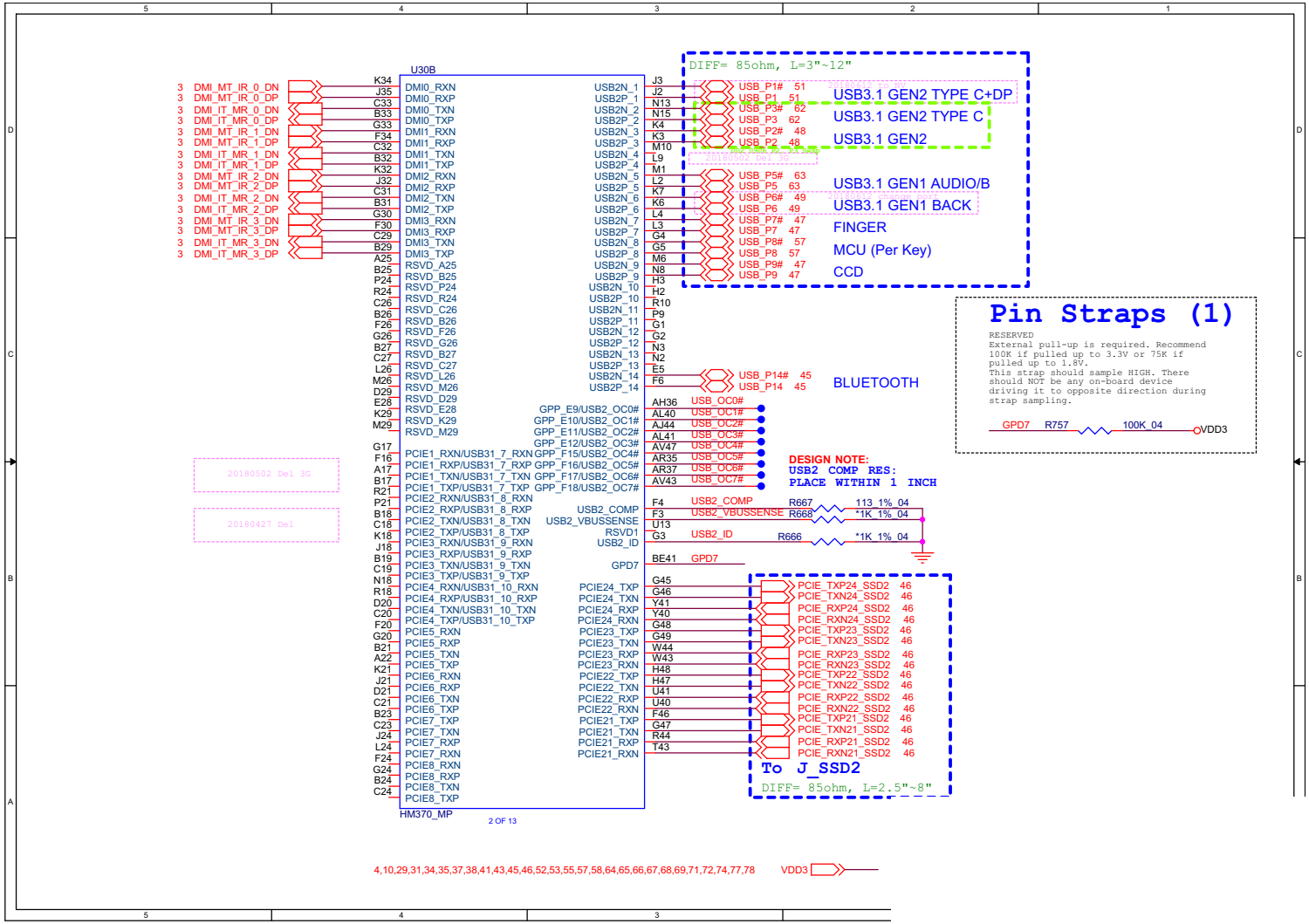

Sheet 36 of 91
PCH 2/9

PCH 3/9

Sheet 37 of 91
PCH 3/9

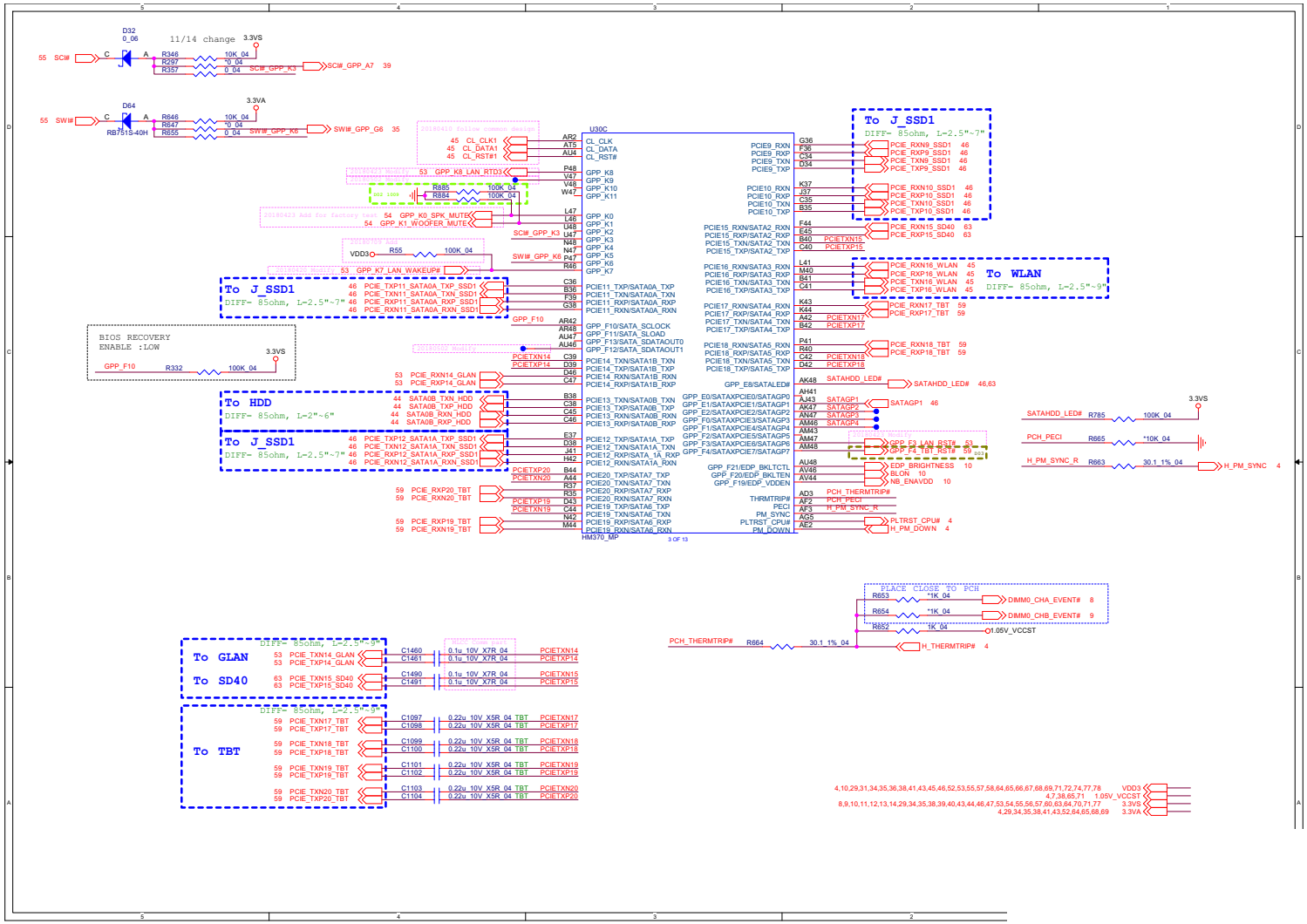

PCH 4/9

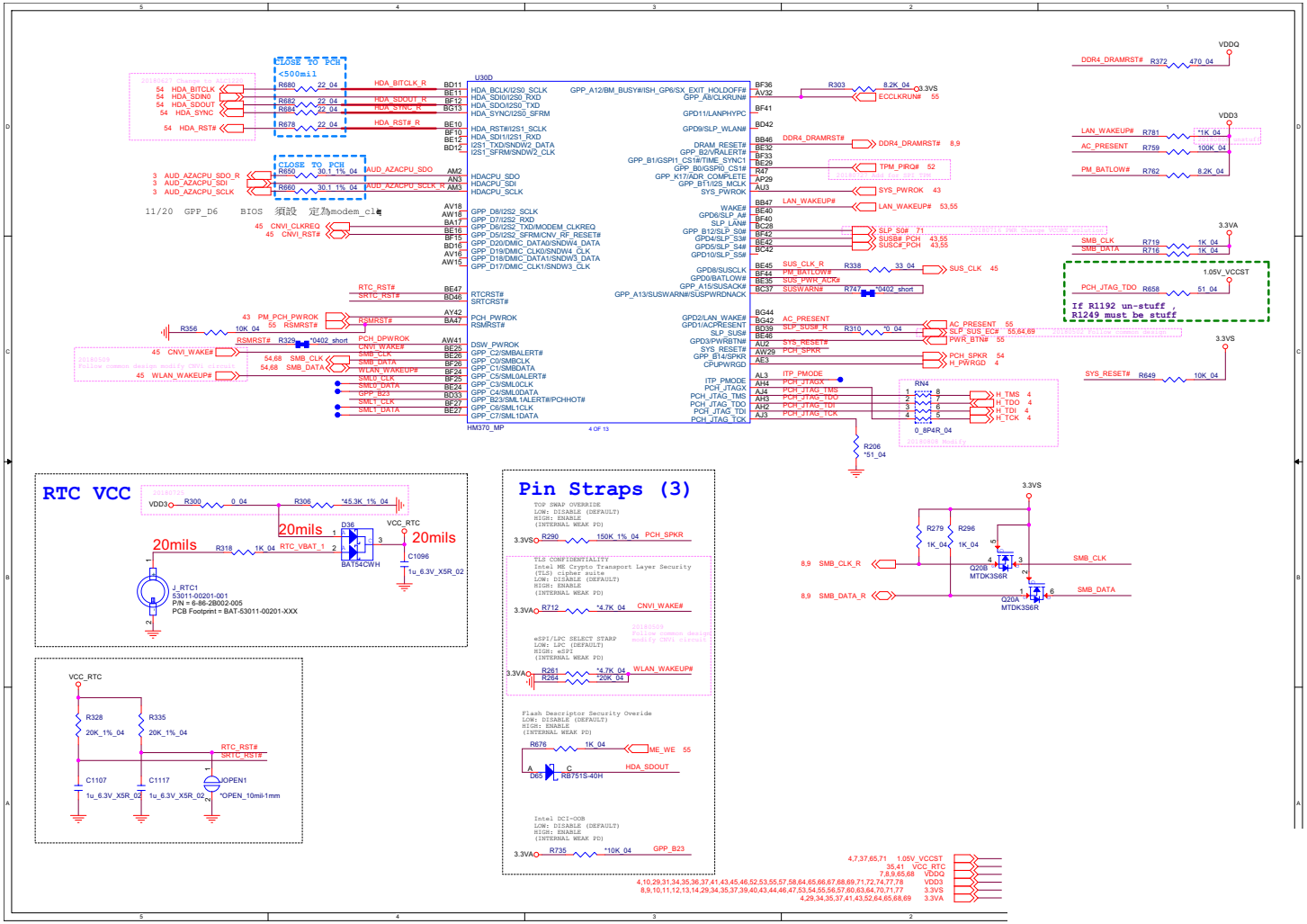

Sheet 38 of 91
PCH 4/9

PCH 5/9

Sheet 39 of 91
PCH 5/9

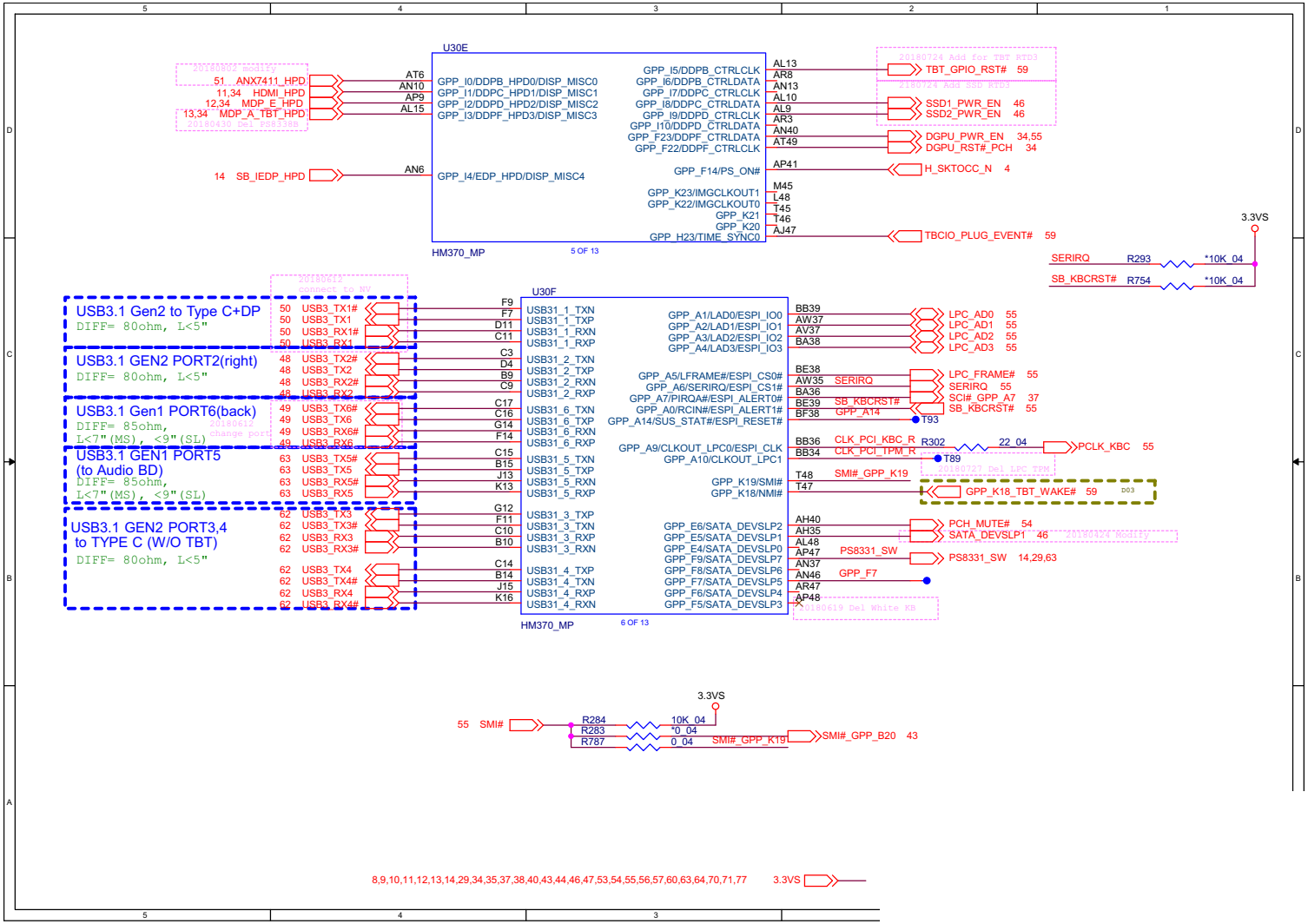

PCH 6/9

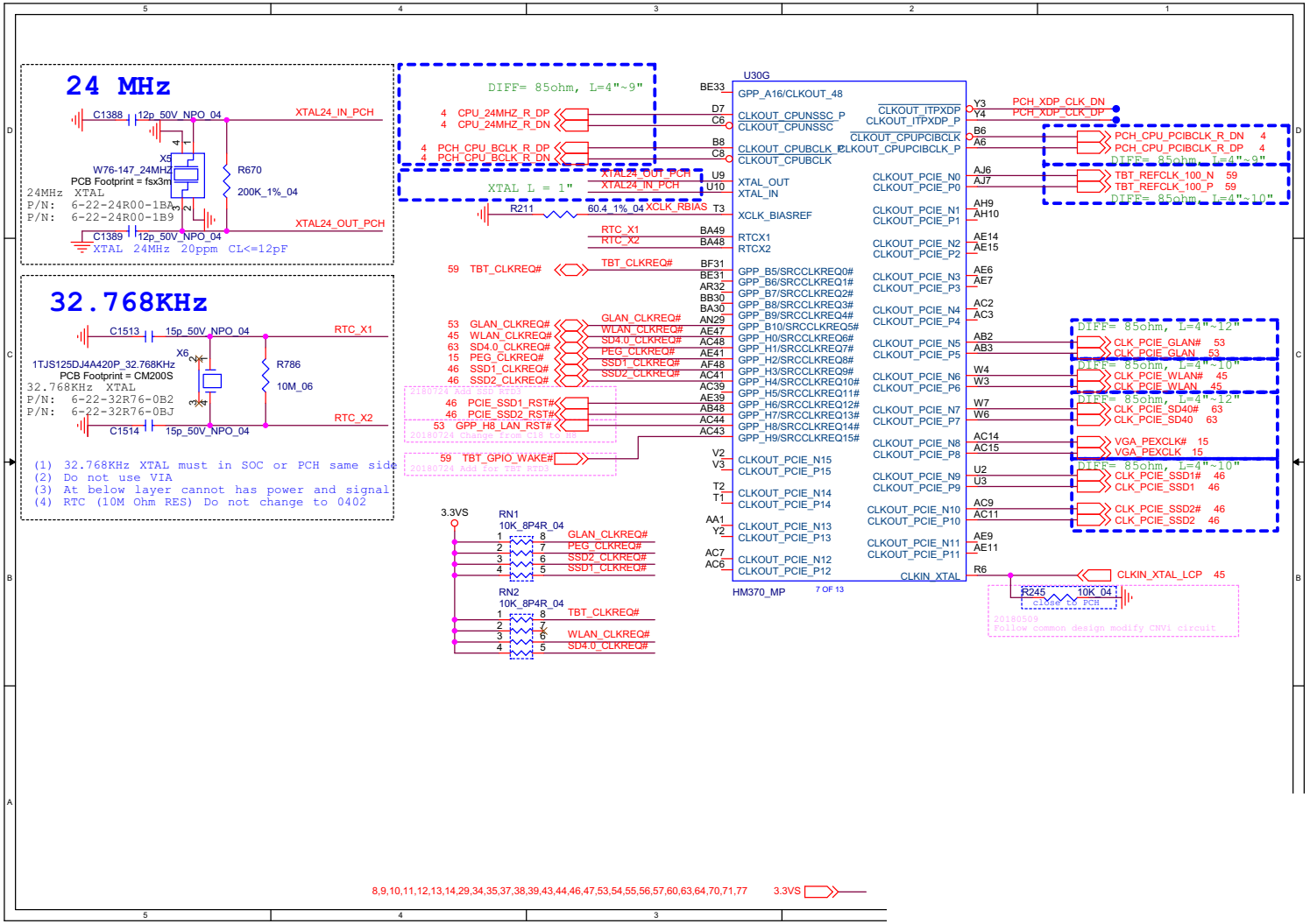

Sheet 40 of 91
PCH 6/9

PCH 7/9

Sheet 41 of 91
PCH 7/9

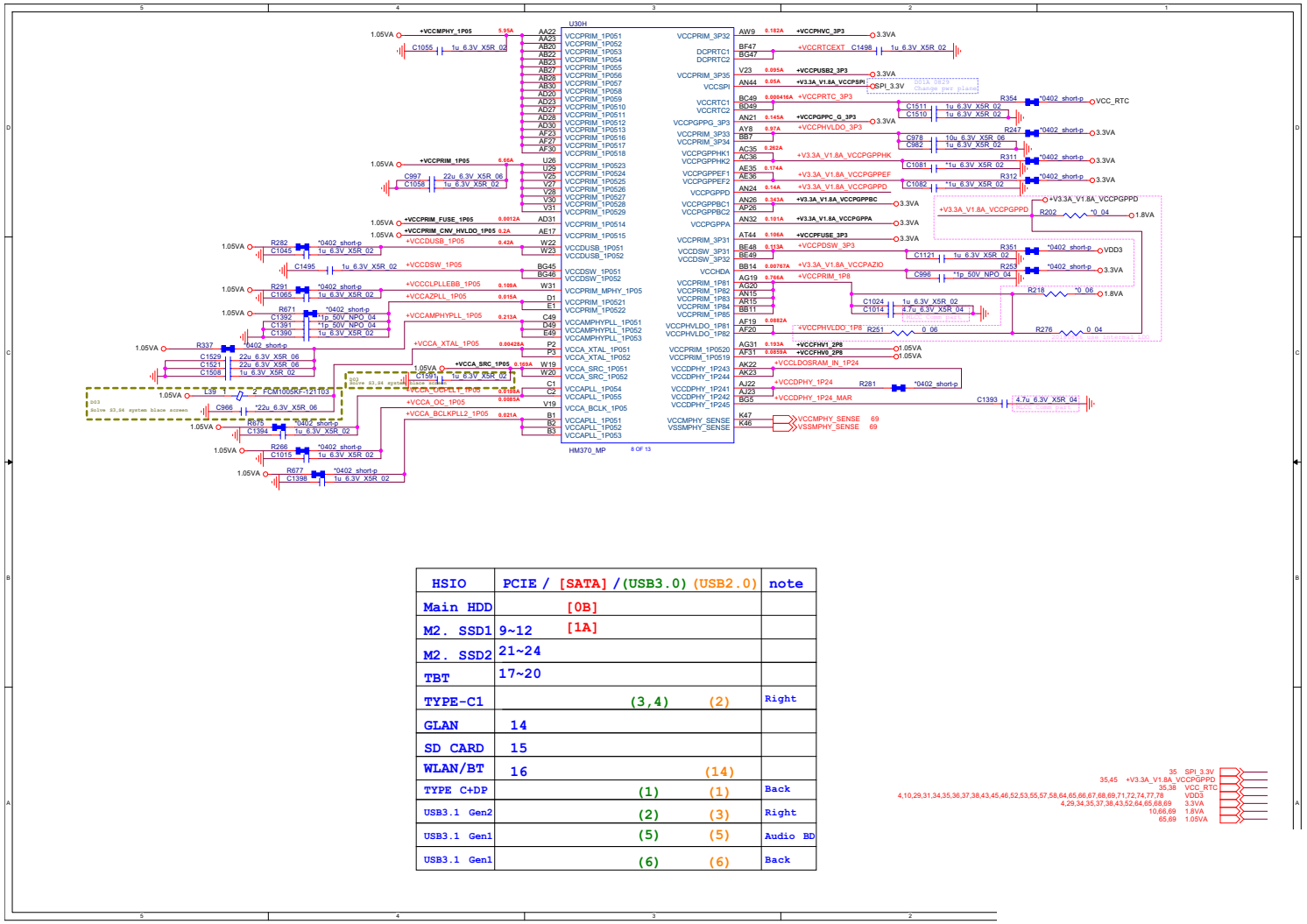

HSIO	PCIE / [SATA] /(USB3.0) (USB2.0)	note
Main HDD	[0B]	
M2. SSD1	9~12 [1A]	
M2. SSD2	21~24	
TBT	17~20	
TYPE-C1	(3,4) (2)	Right
GLAN	14	
SD CARD	15	
WLAN/BT	16 (14)	
TYPE C+DP	(1) (1)	Back
USB3.1 Gen2	(2) (3)	Right
USB3.1 Gen1	(5) (5)	Audio BD
USB3.1 Gen1	(6) (6)	Back

PCH 8/9

Sheet 42 of 91
PCH 8/9

PCH 9/9

Sheet 43 of 91
PCH 9/9

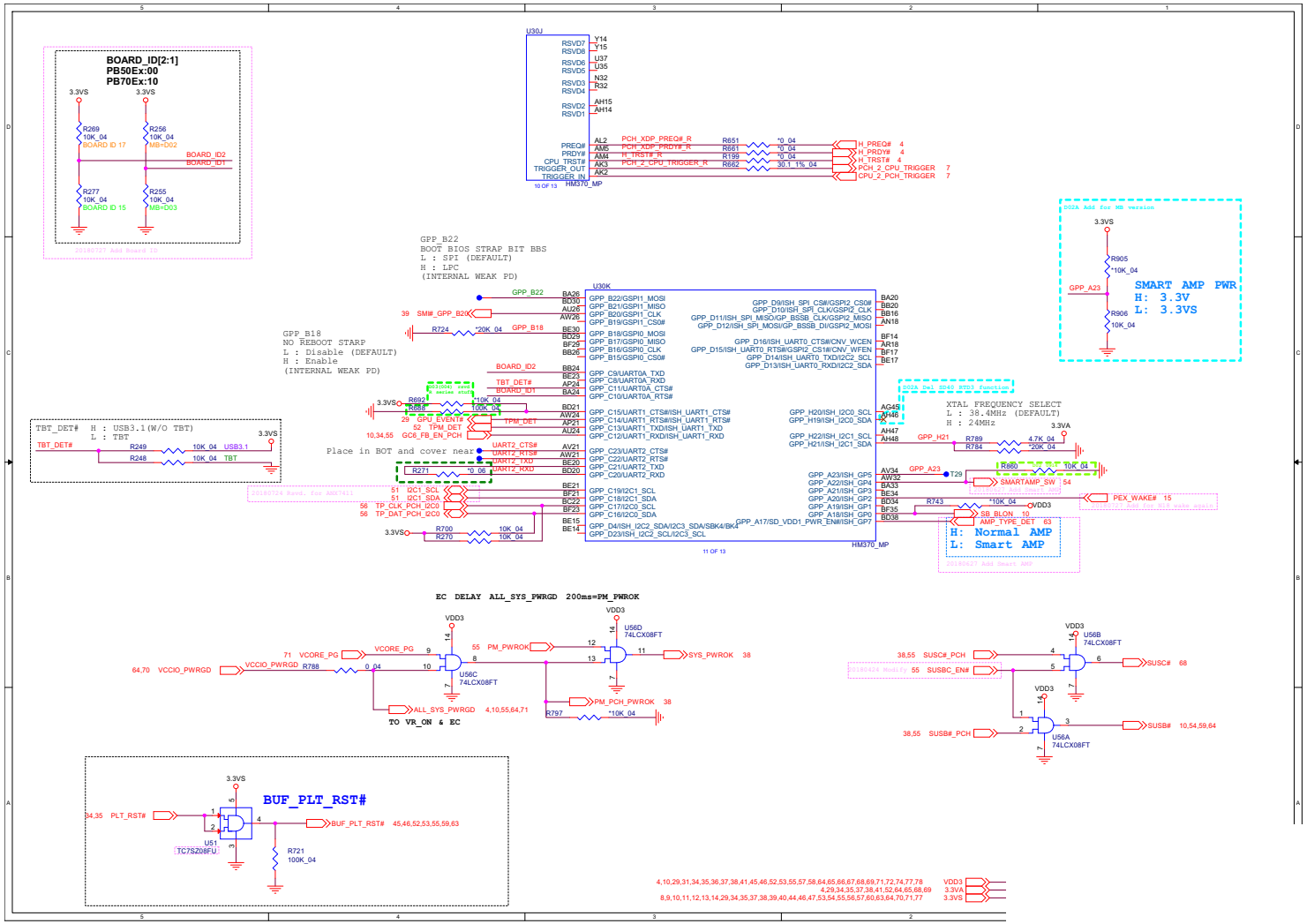

HDD Port

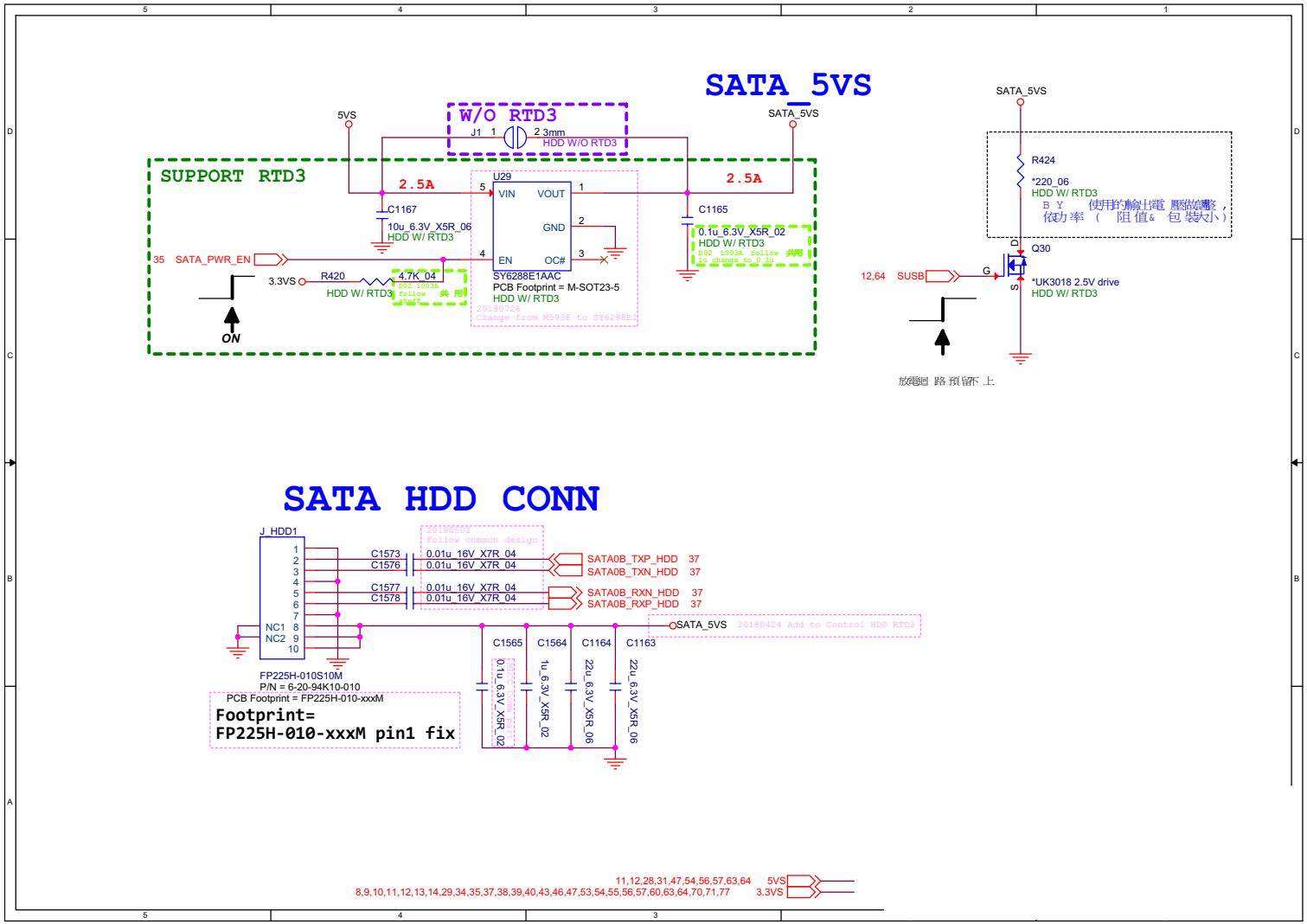

Sheet 44 of 91
HDD Port

B.Schematic Diagrams

M.2 WLAN+BT

Sheet 45 of 91
M.2 WLAN+BT

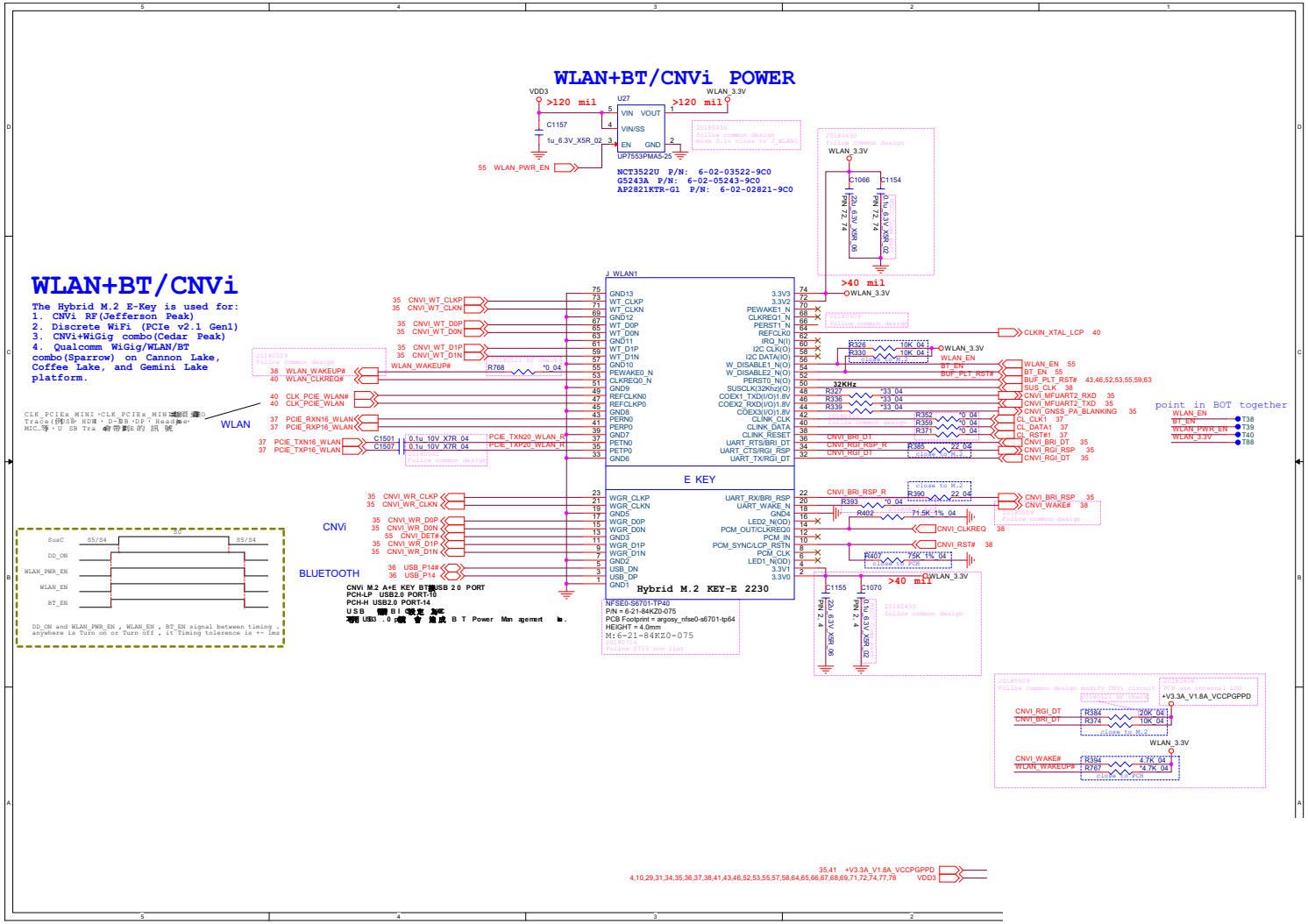

M.2 PCIEX4 SATA

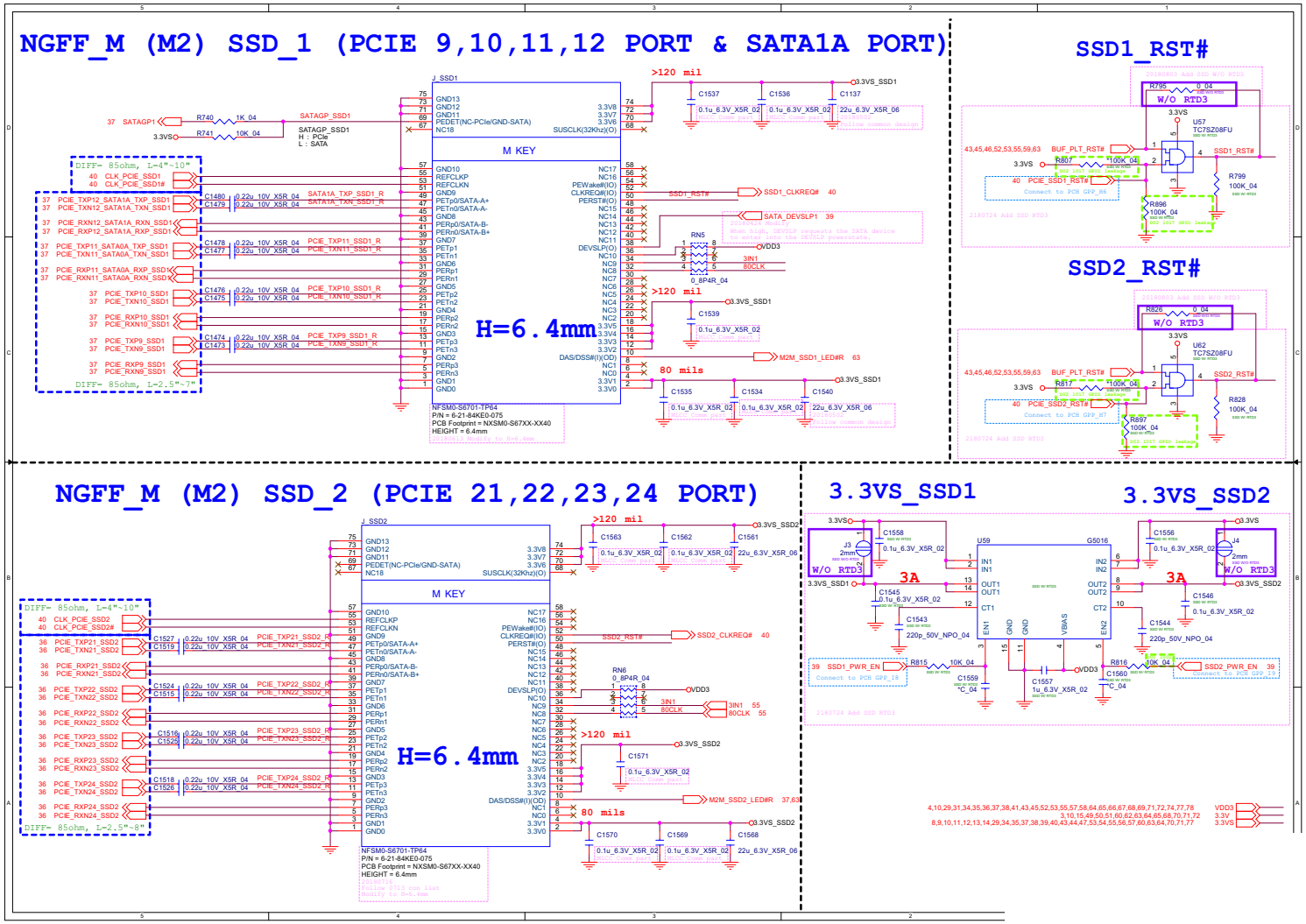

Sheet 46 of 91
M.2 PCIEX4 SATA

CCD, FP

Sheet 47 of 91
CCD, FP

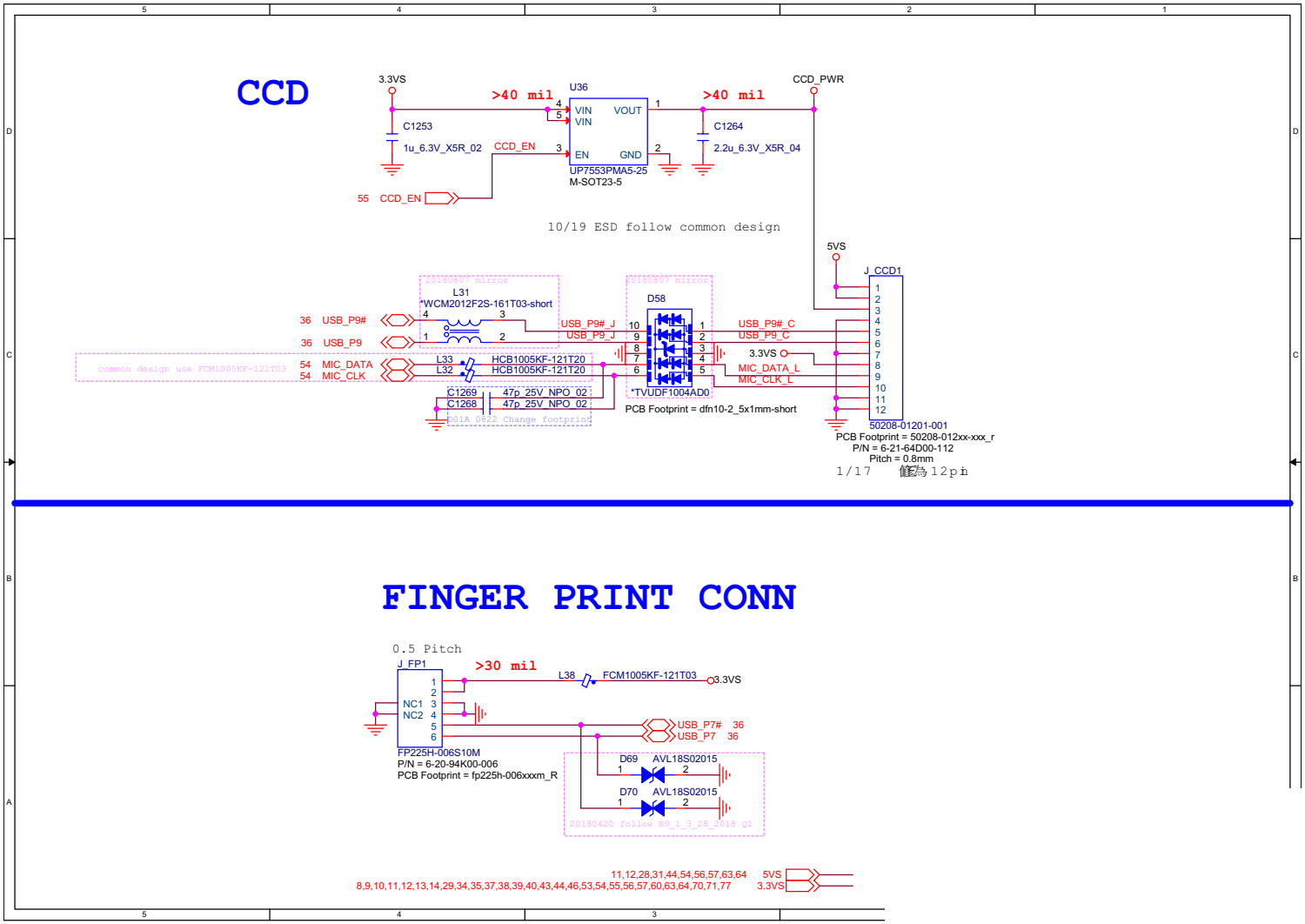

USB

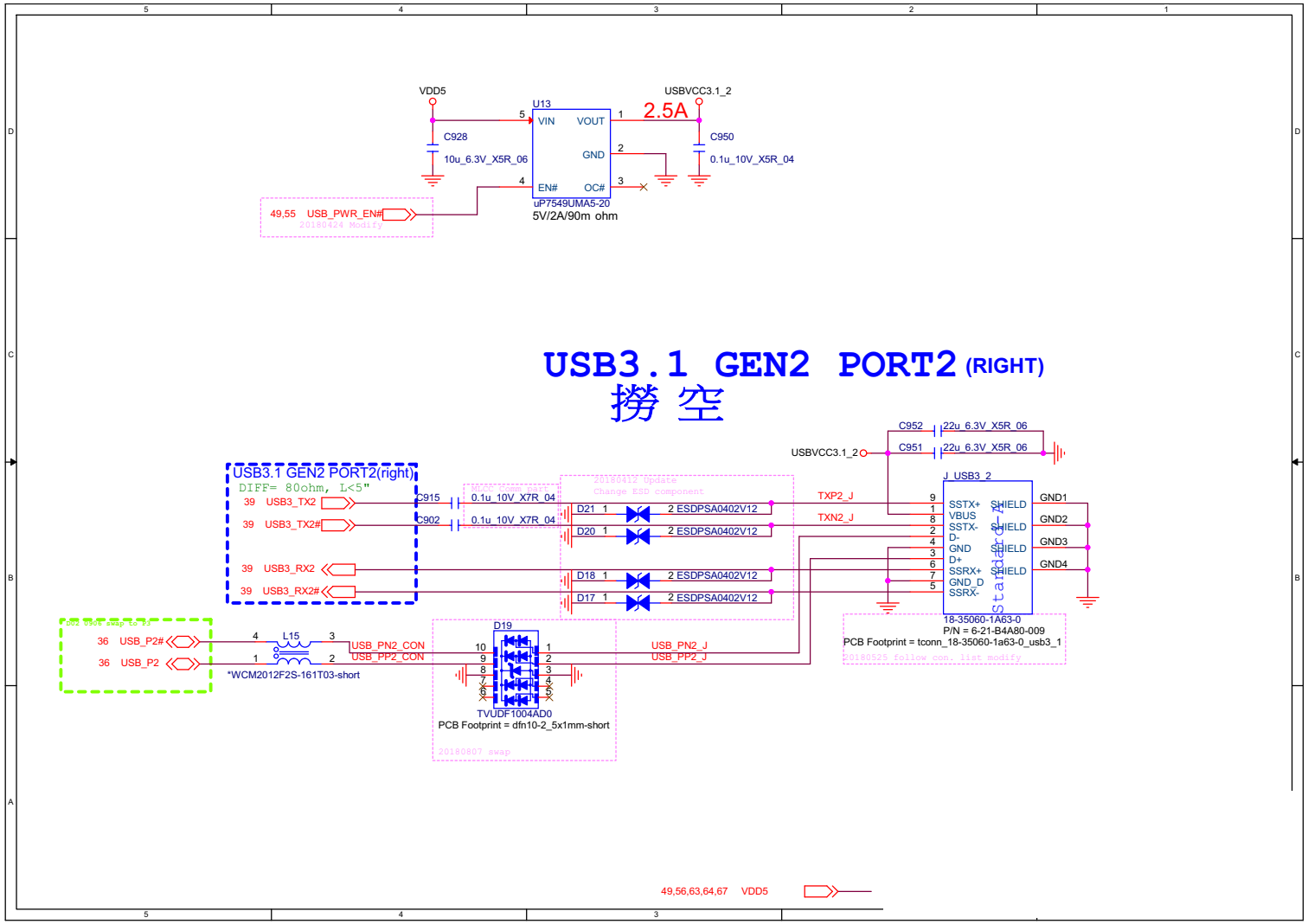

Sheet 48 of 91
USB

USB Redriver

Sheet 49 of 91
USB Redriver

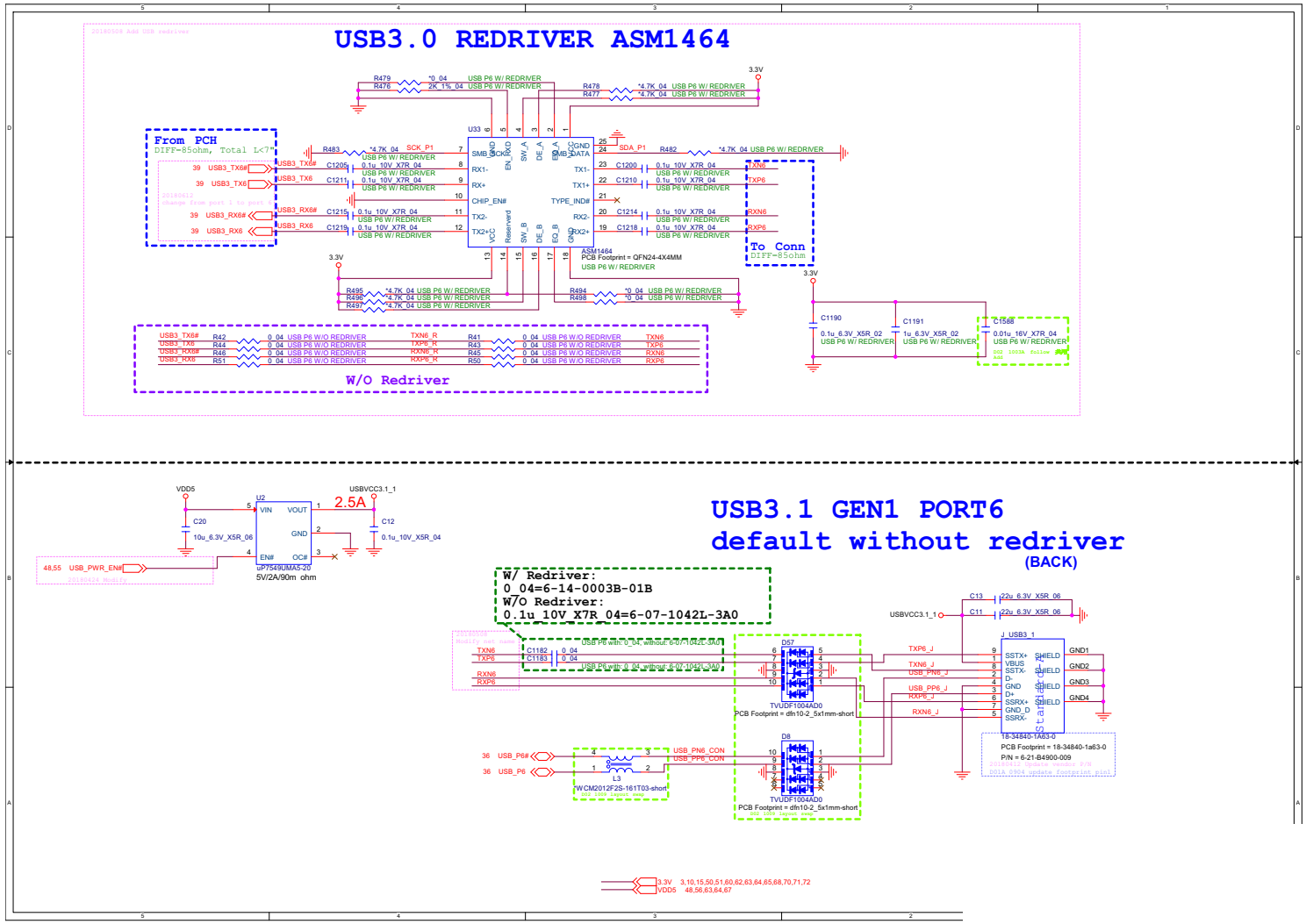

ANX7440

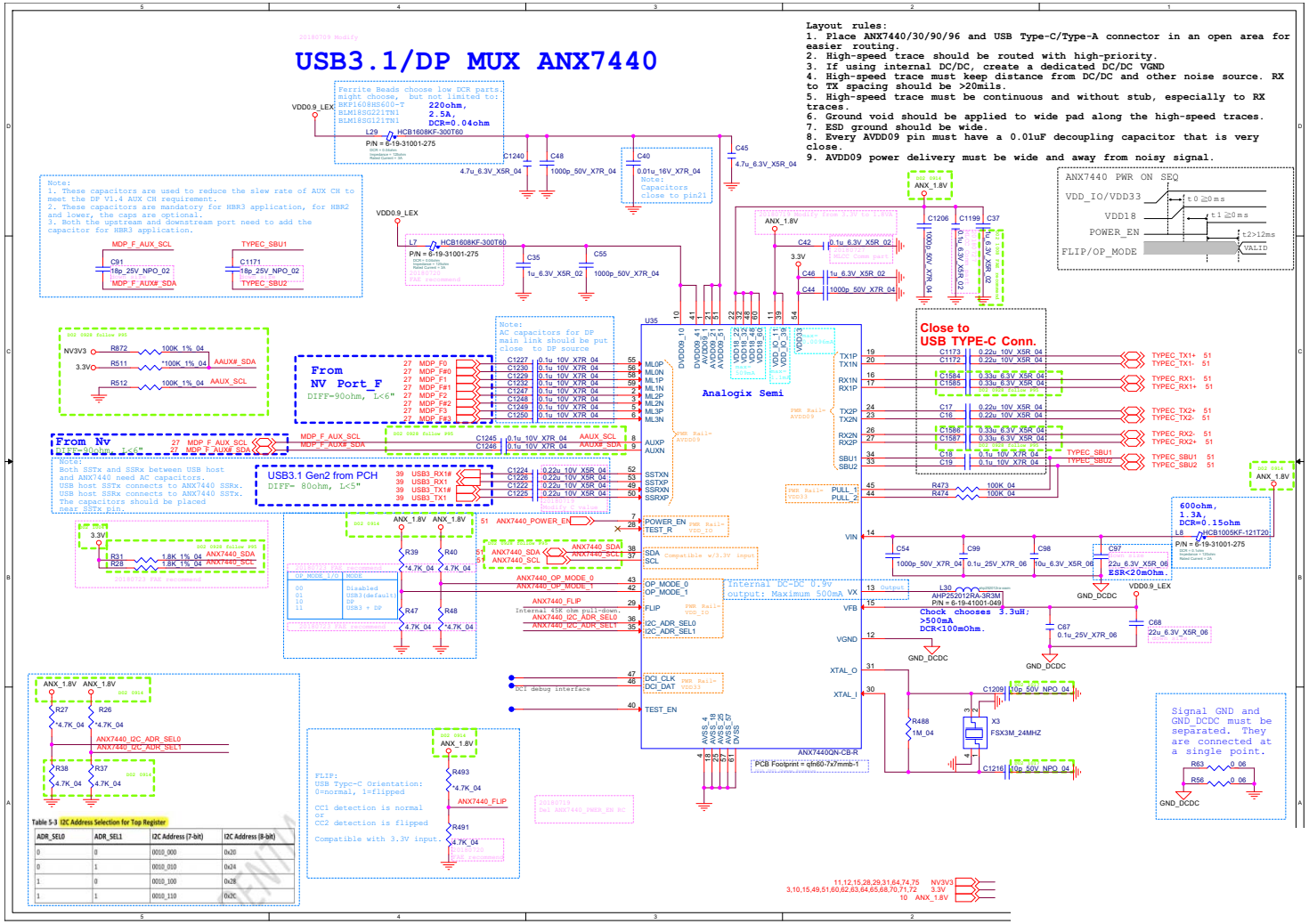

Sheet 50 of 91
ANX7440

USB+DP Type-C

Sheet 51 of 91
USB+DP Type-C

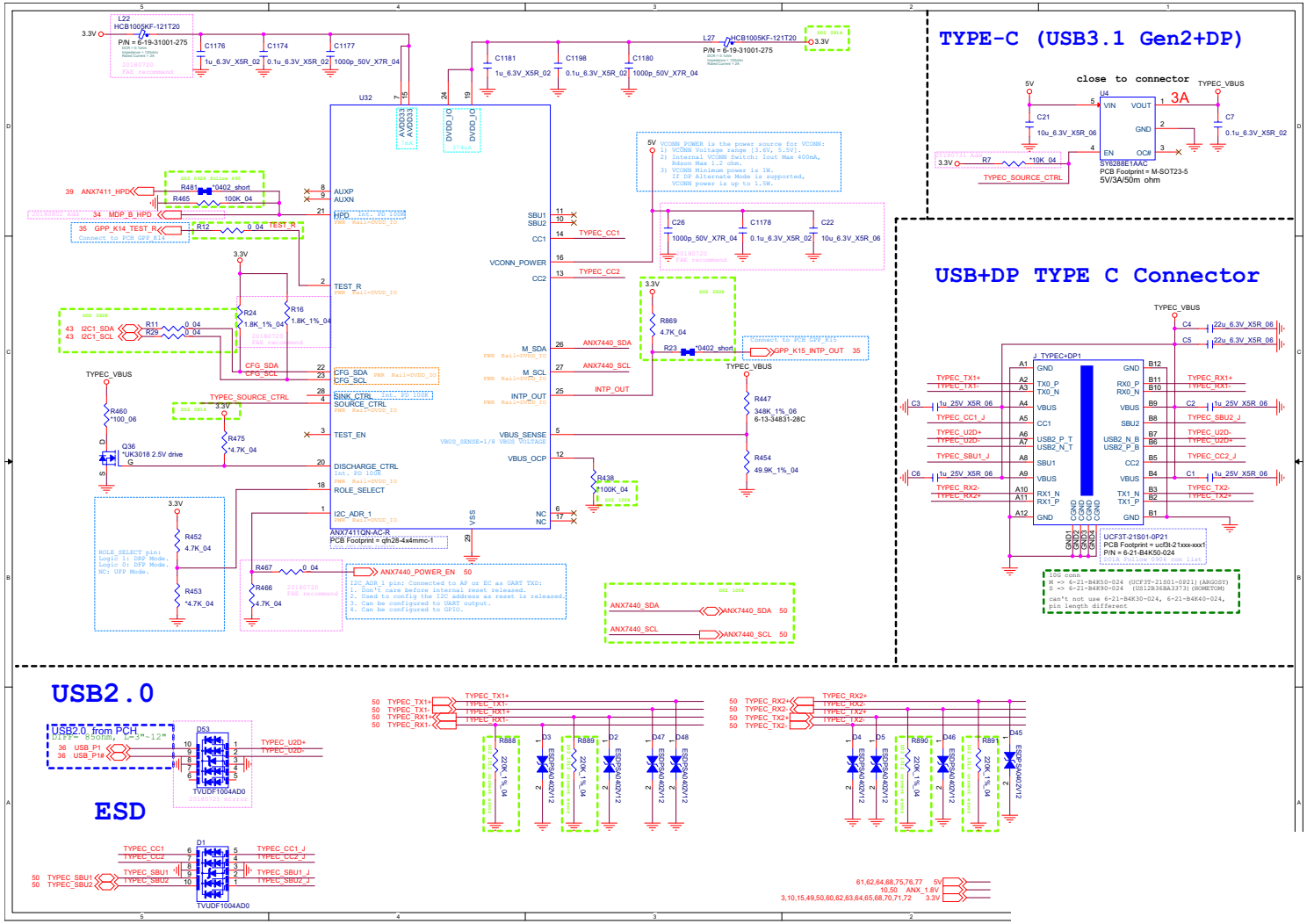

TPM

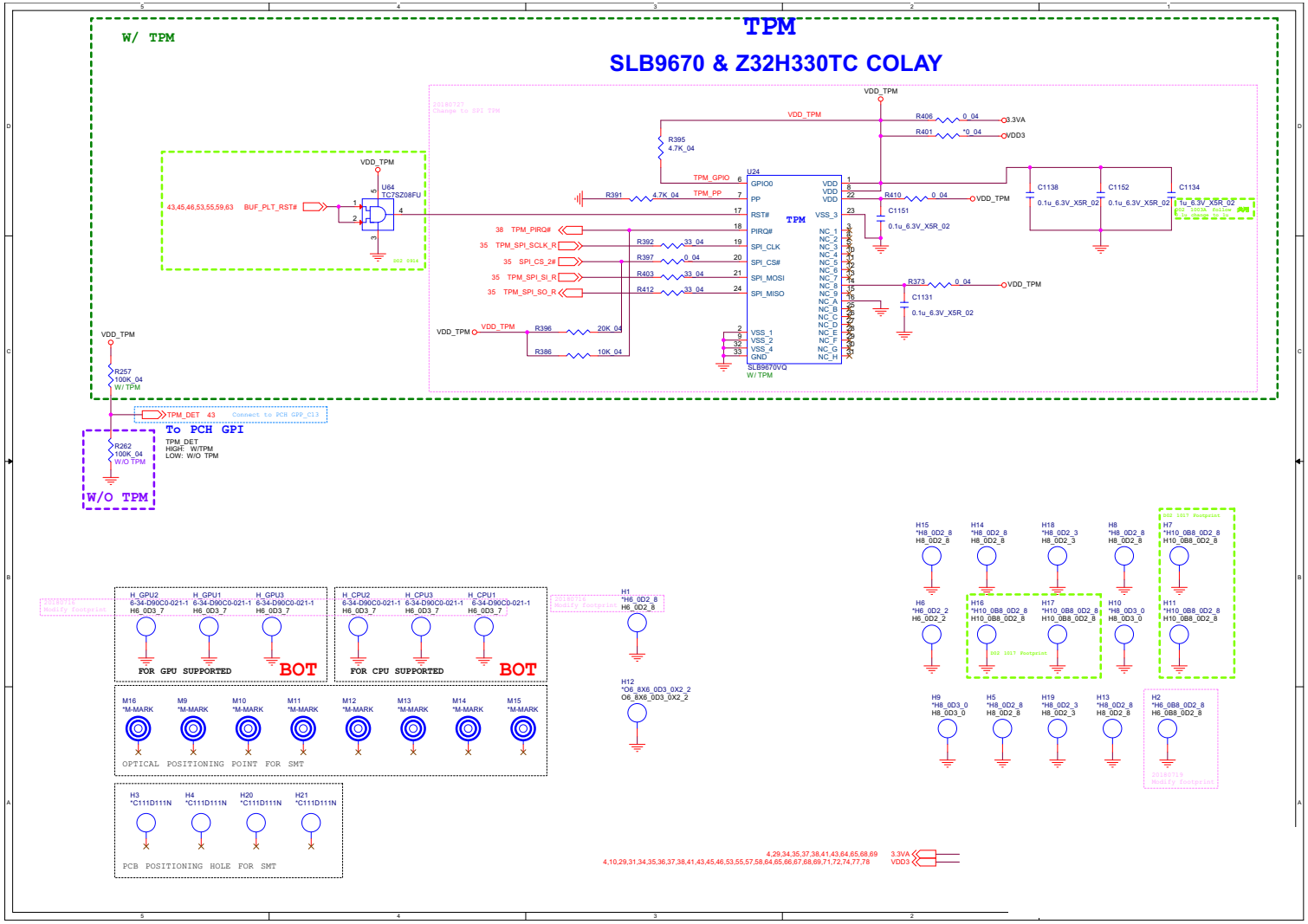

Sheet 52 of 91
TPM

LAN RTL8111H

Sheet 53 of 91
LAN RTL8111H

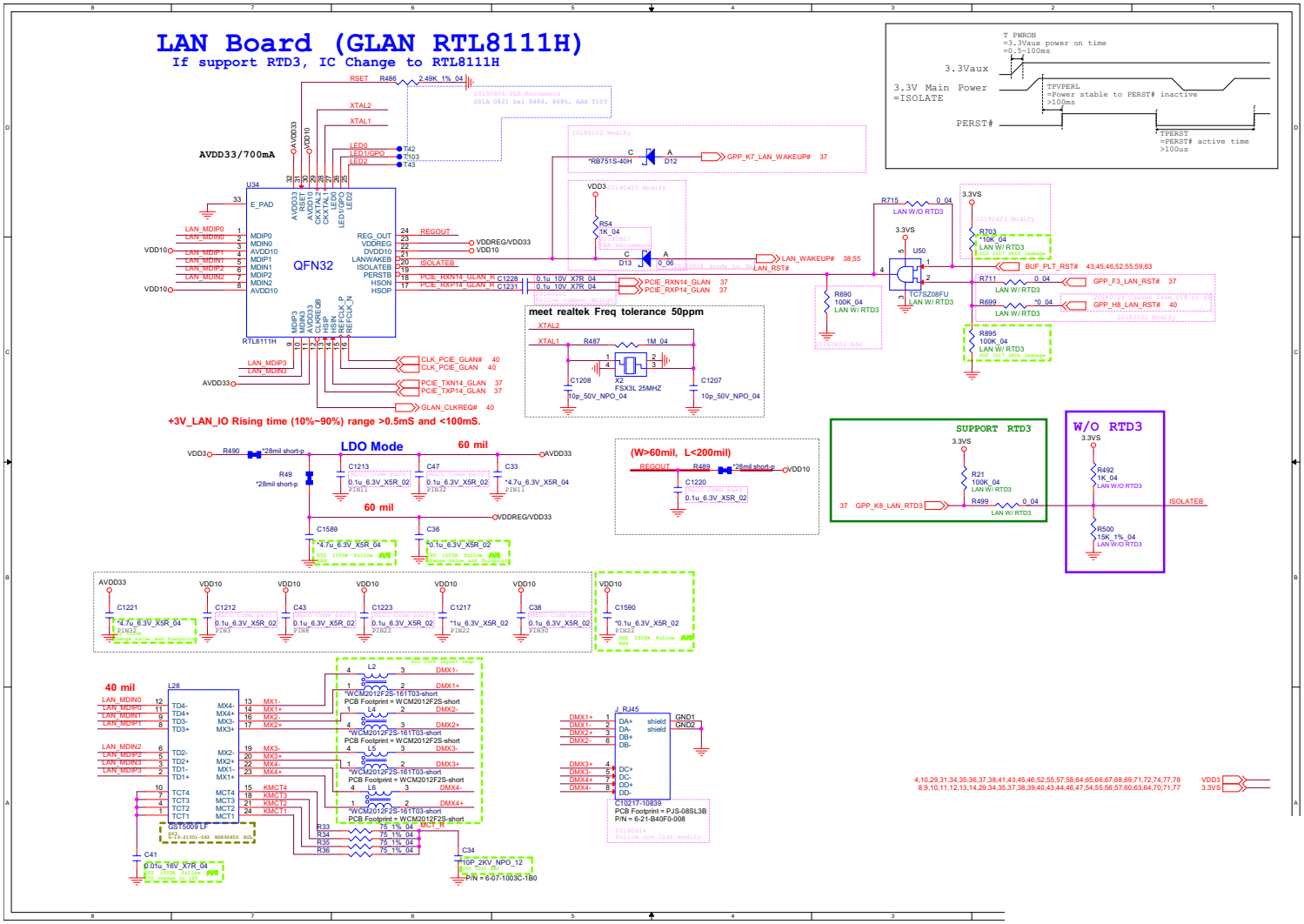

ALC1220

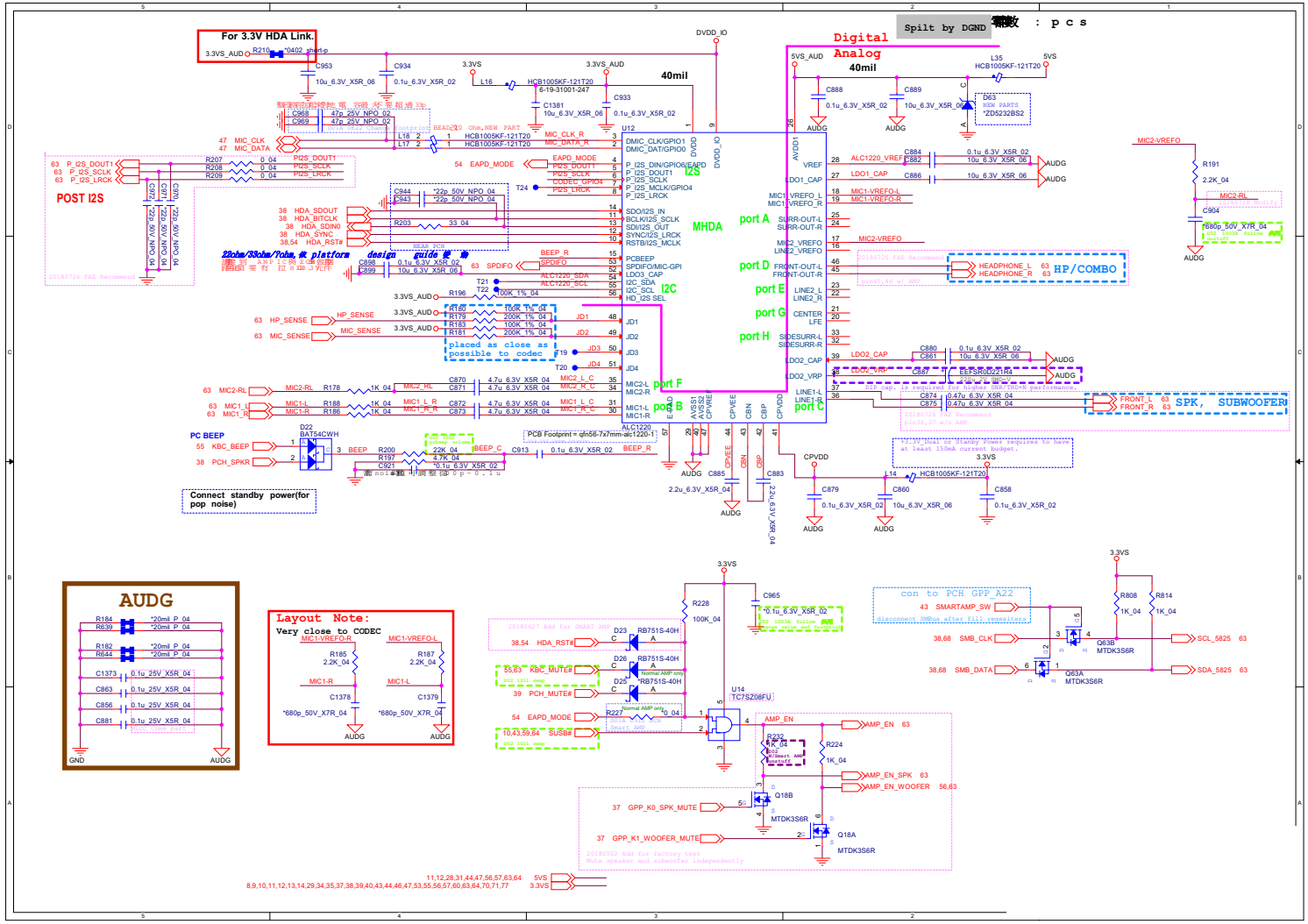

Sheet 54 of 91
ALC1220

EC ITE8587

Sheet 55 of 91
EC ITE8587

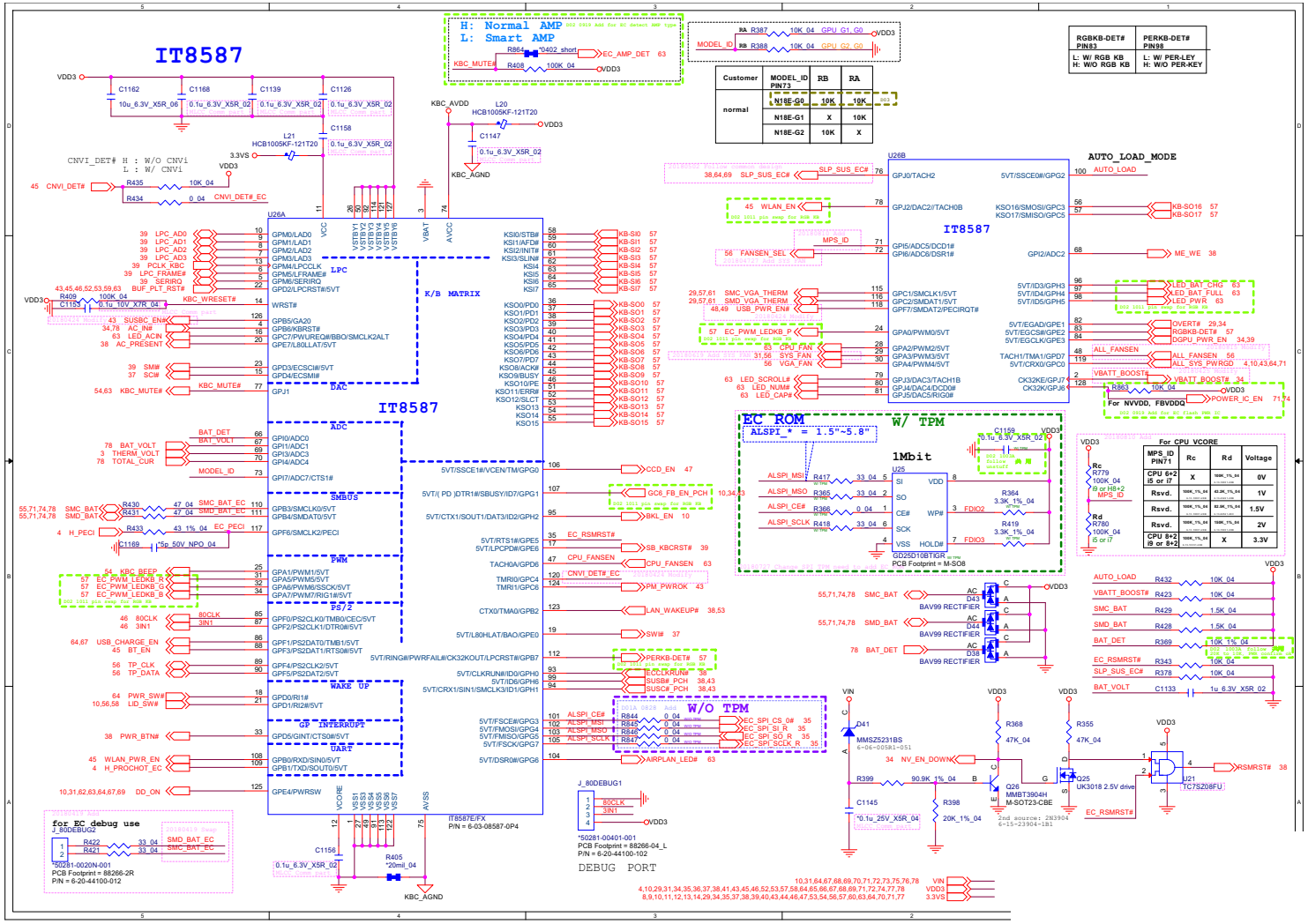

Fan, TP, Smart AMP PWR

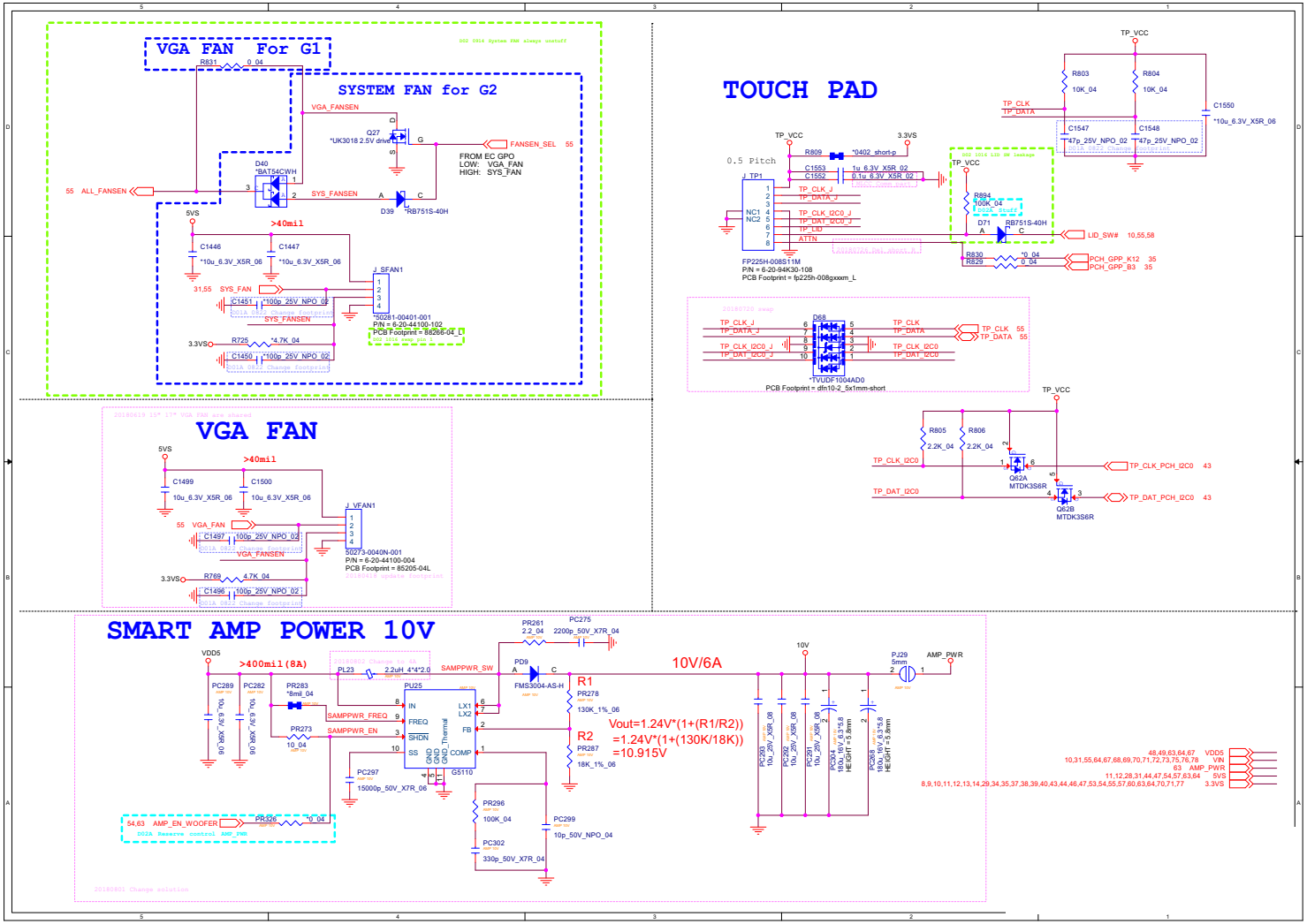

Sheet 56 of 91
Fan, TP, Smart
AMP PWR

LED Keyboard Ctrl

Sheet 57 of 91
LED Keyboard Ctrl

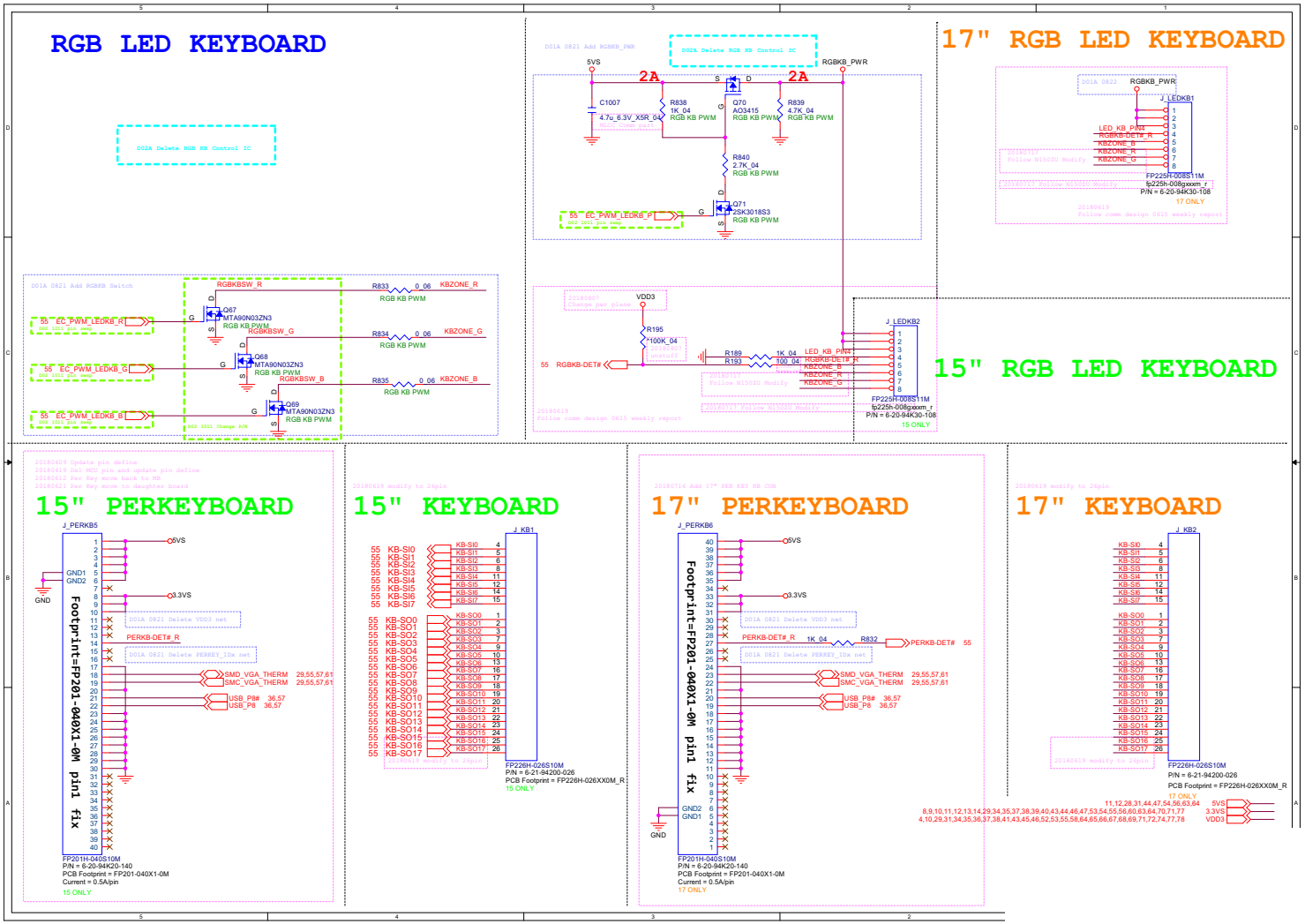

LID

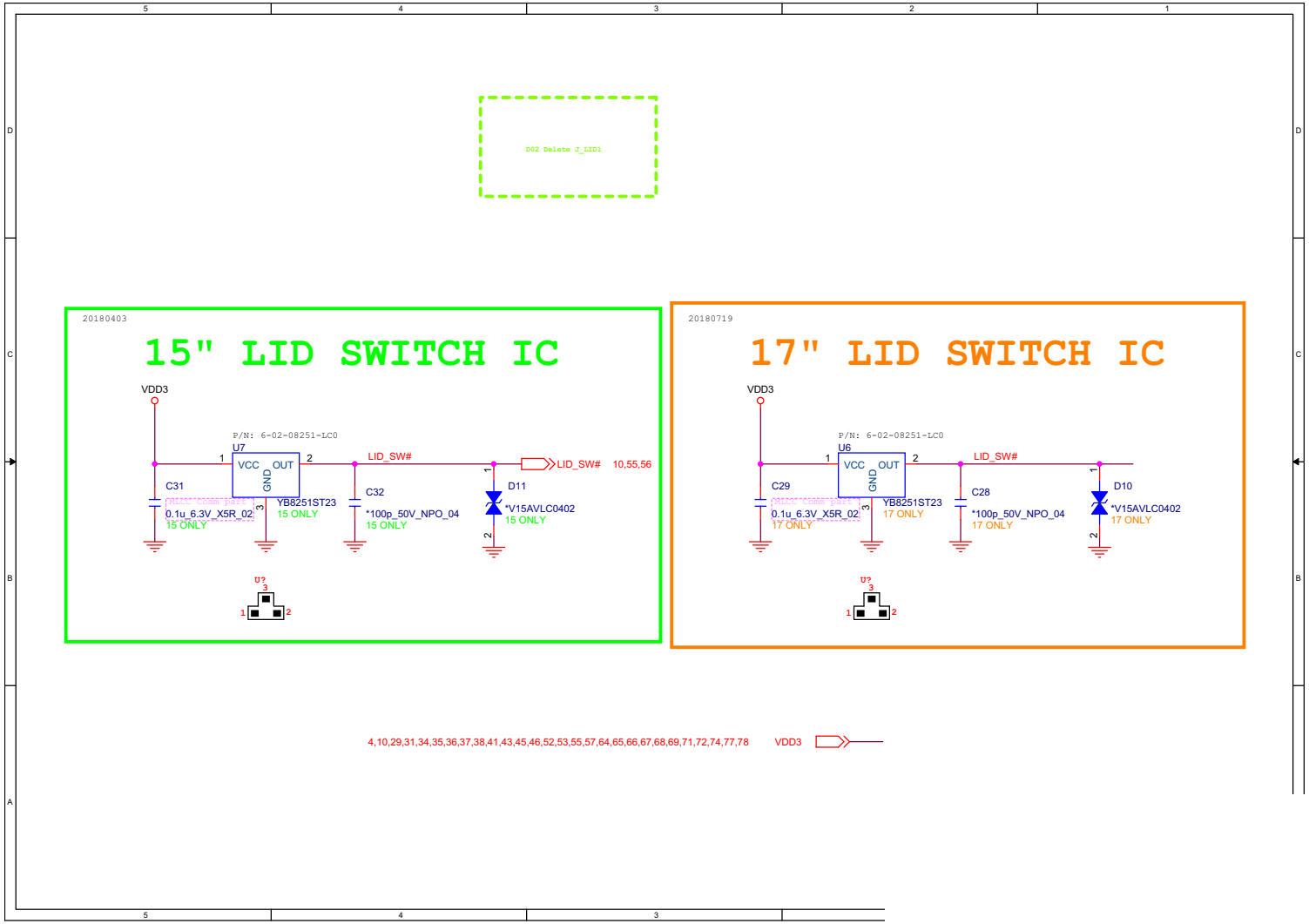

Sheet 58 of 91
LID

TR-TBT

Sheet 59 of 91
TR-TBT

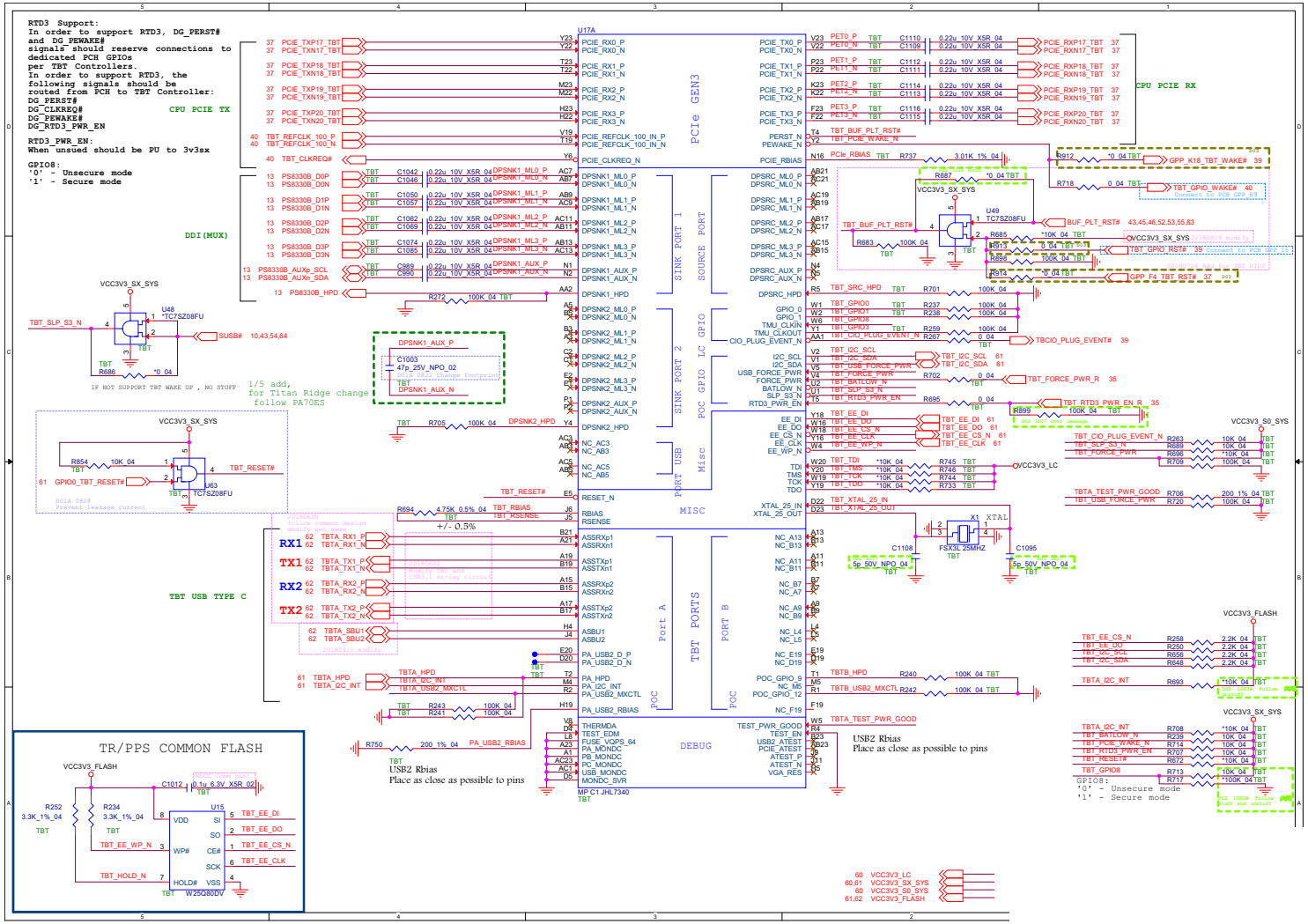

AR_TBT_SP PWR

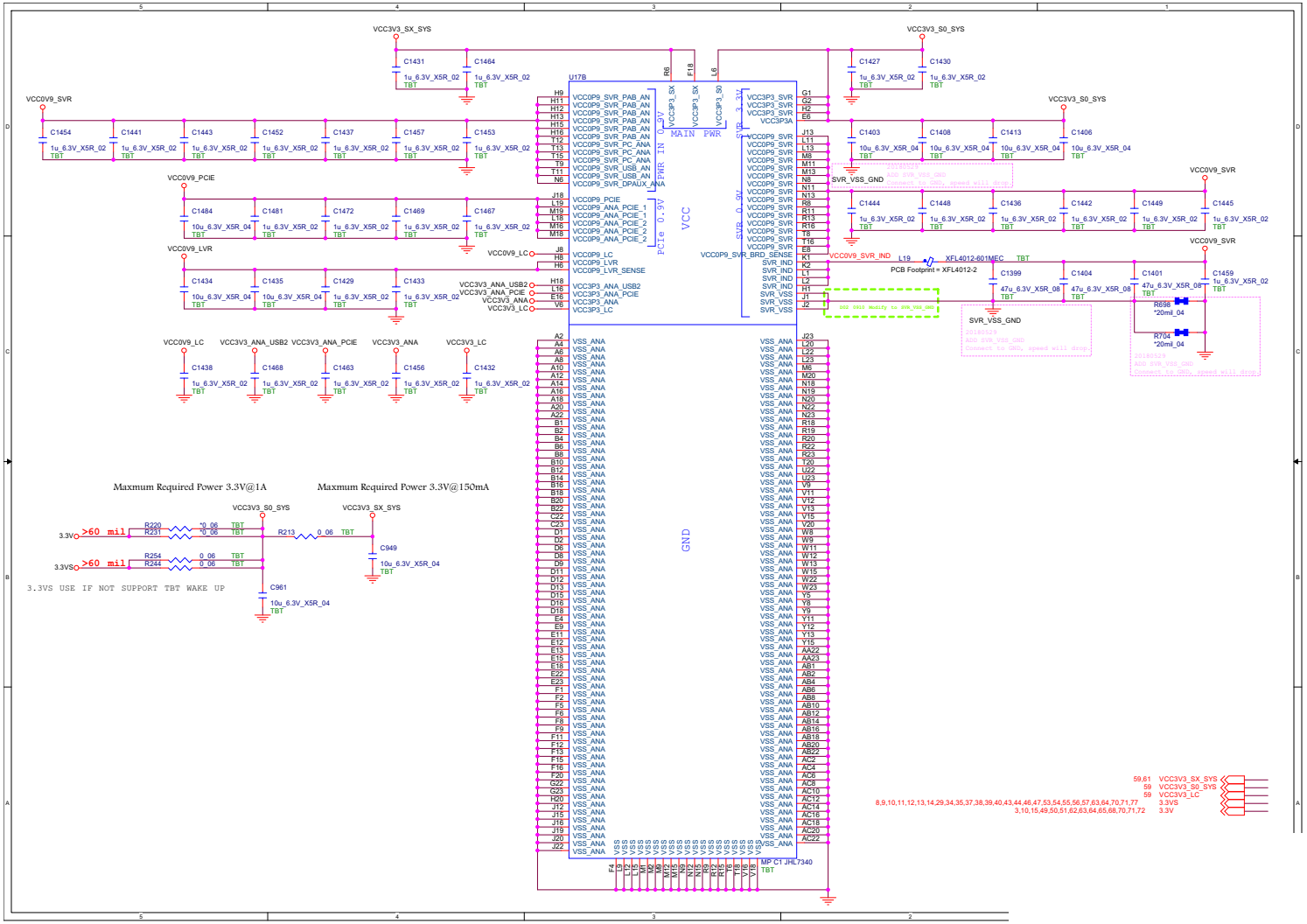

Sheet 60 of 91
AR_TBT_SP PWR

TPS65987

Sheet 61 of 91
TPS65987

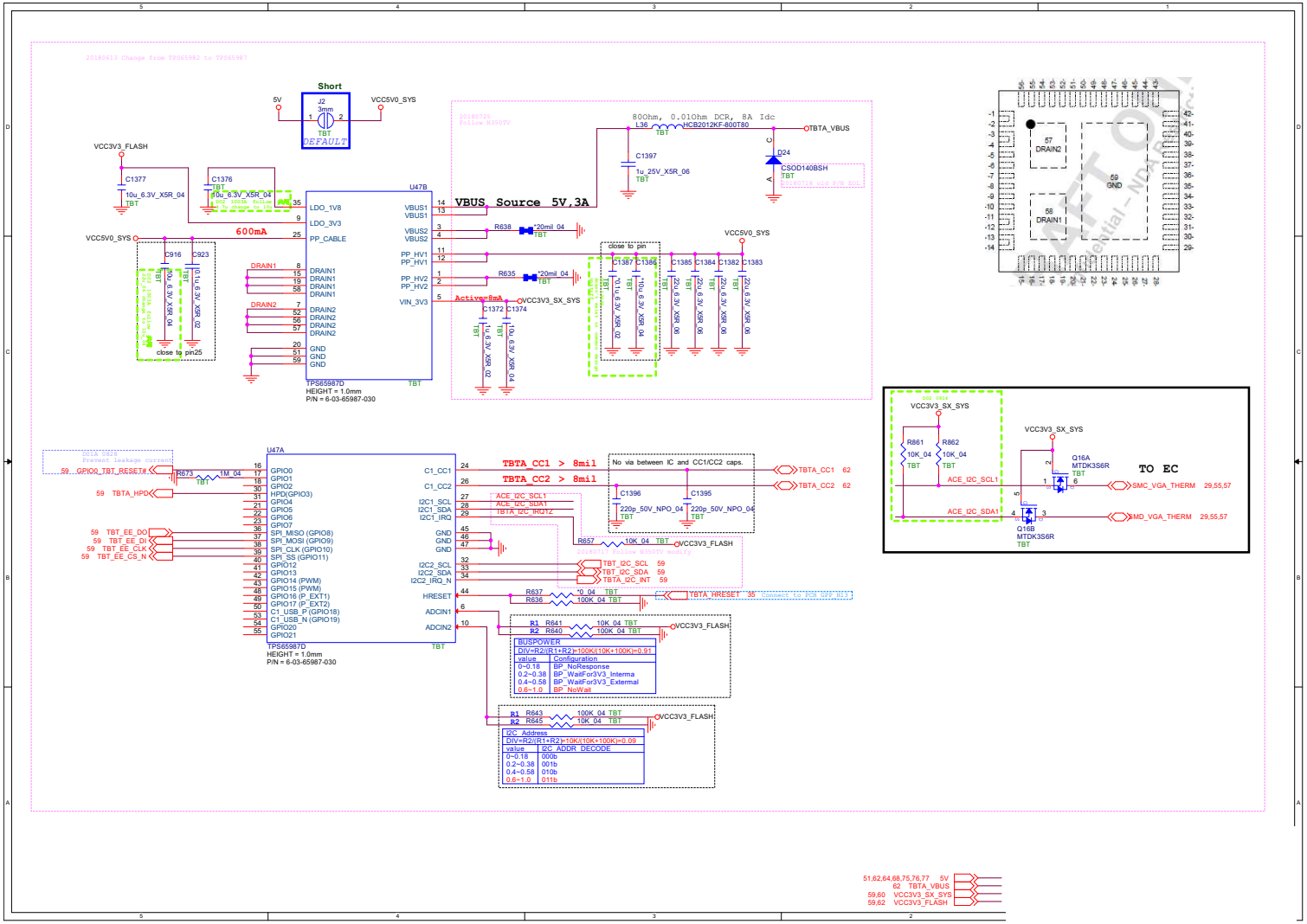

TBT/Type C

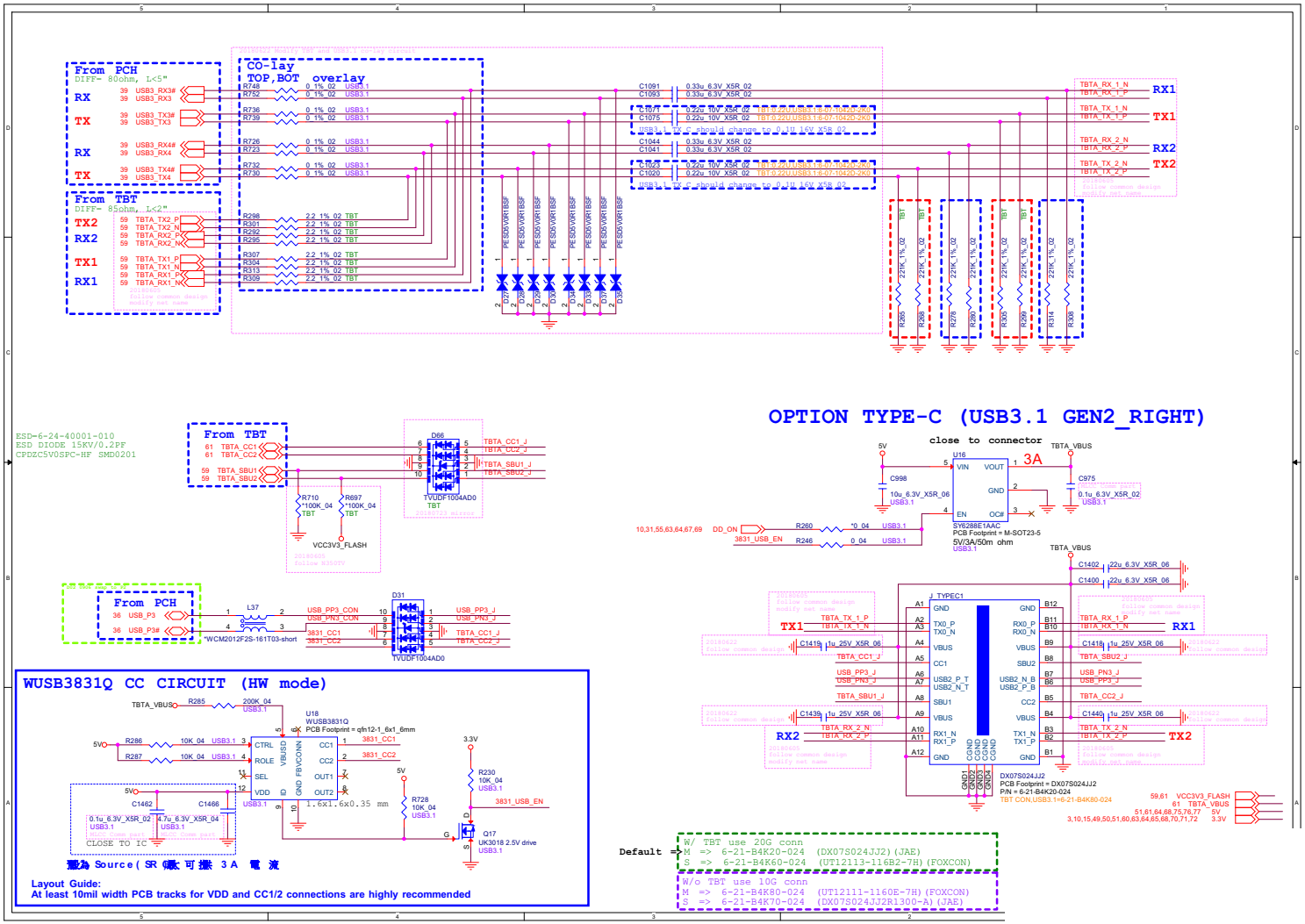

Sheet 62 of 91
TBT/Type C

Conn_to Extend Board

Sheet 63 of 91
Conn_to Extend Board

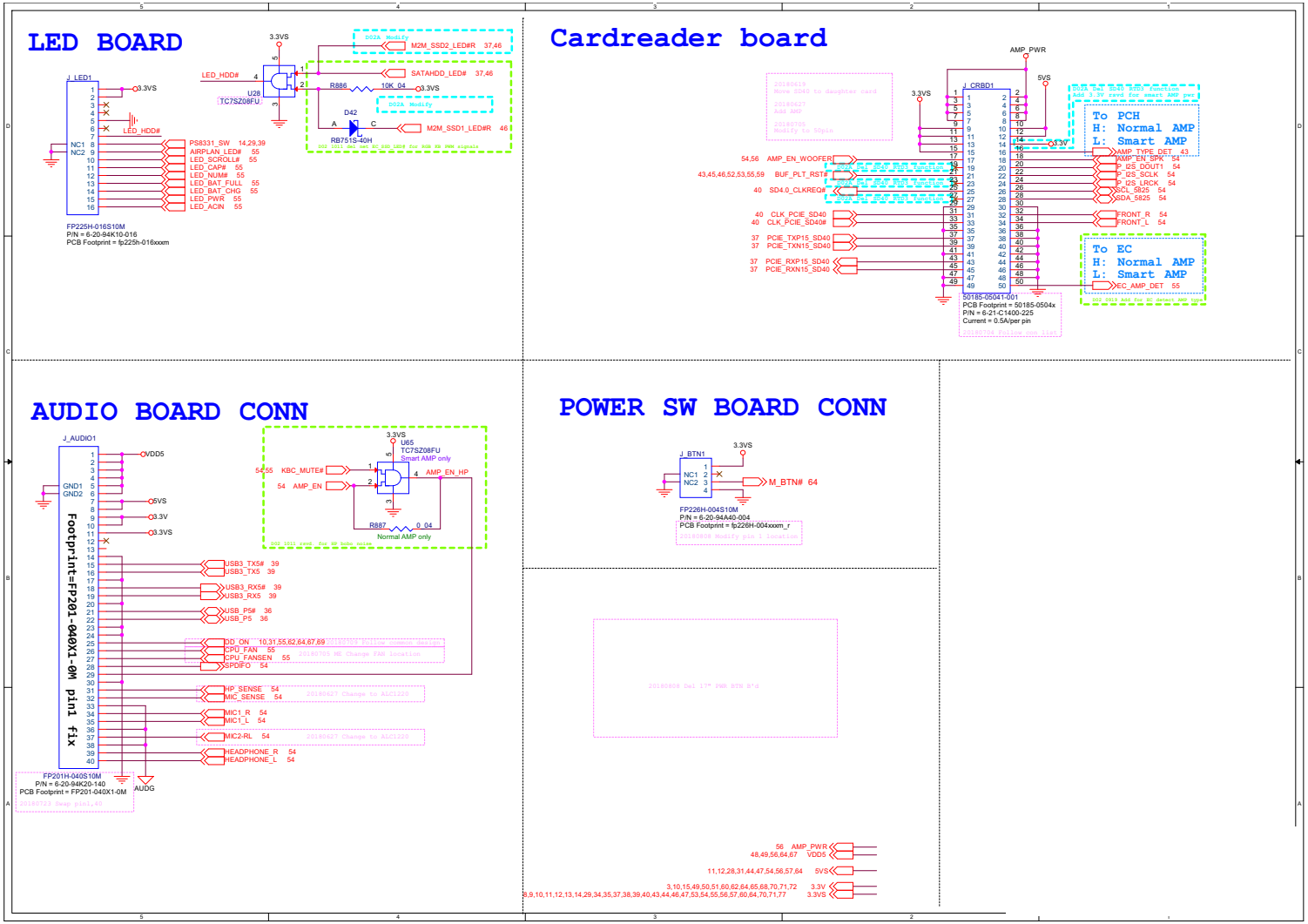

3.3VA, 3.3V, 3.3VS, 5VS

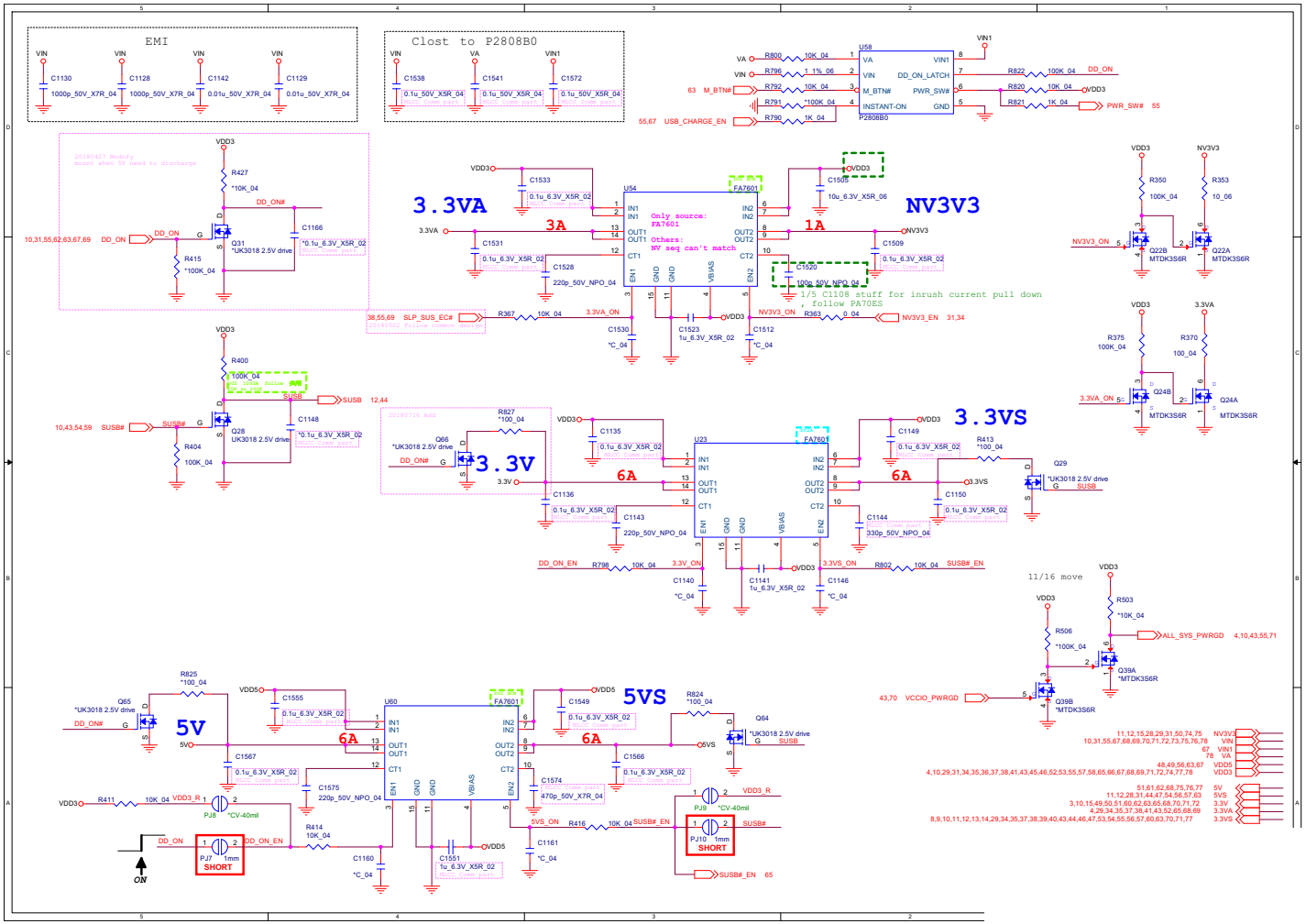

Sheet 64 of 91
3.3VA, 3.3V, 3.3VS, 5VS

PWR_SW VCCST, STG, SFR_OC

Sheet 65 of 91
PWR_SW VCCST, STG, SFR_OC

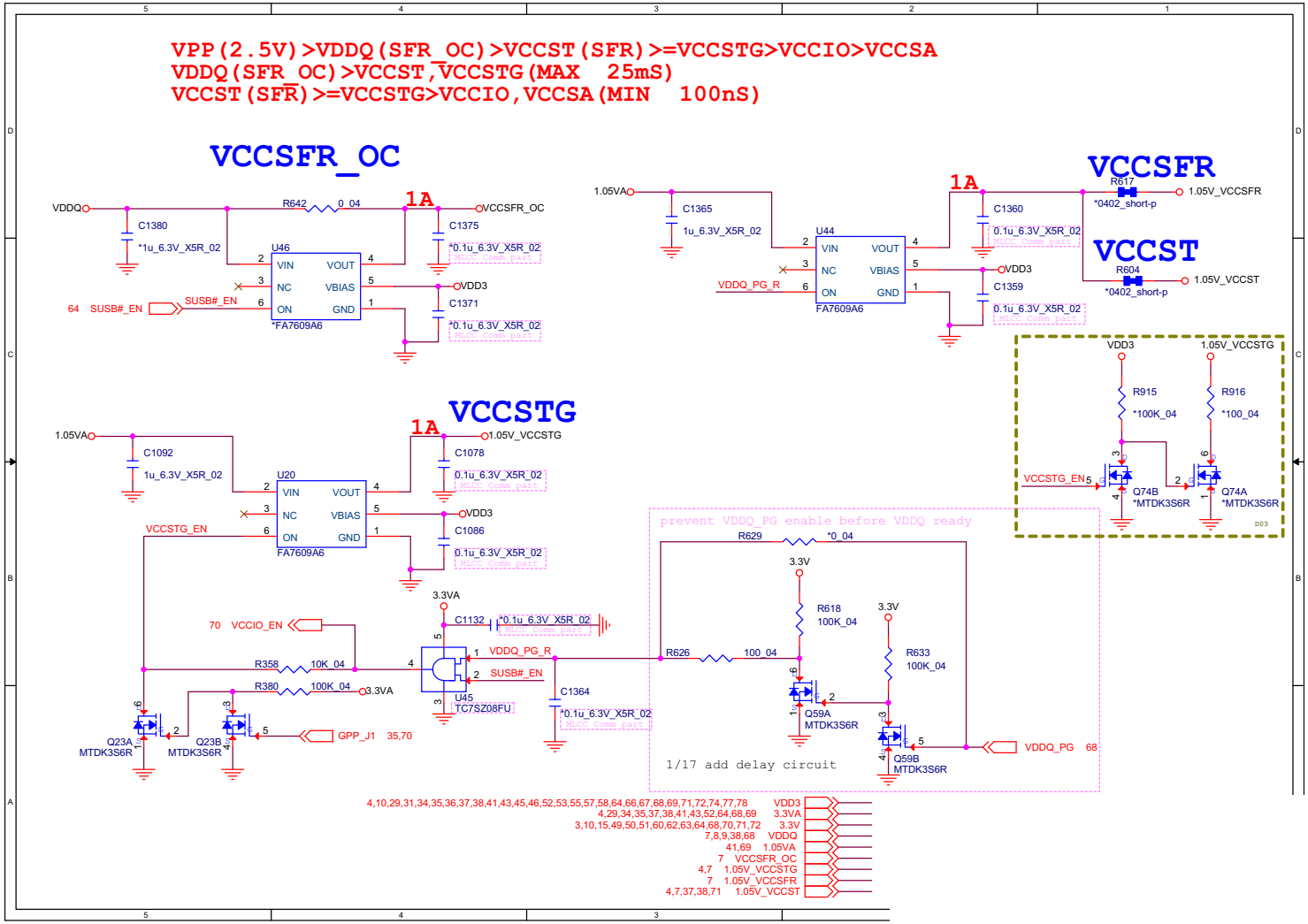

PWR_SW 1V8_AON, RUN

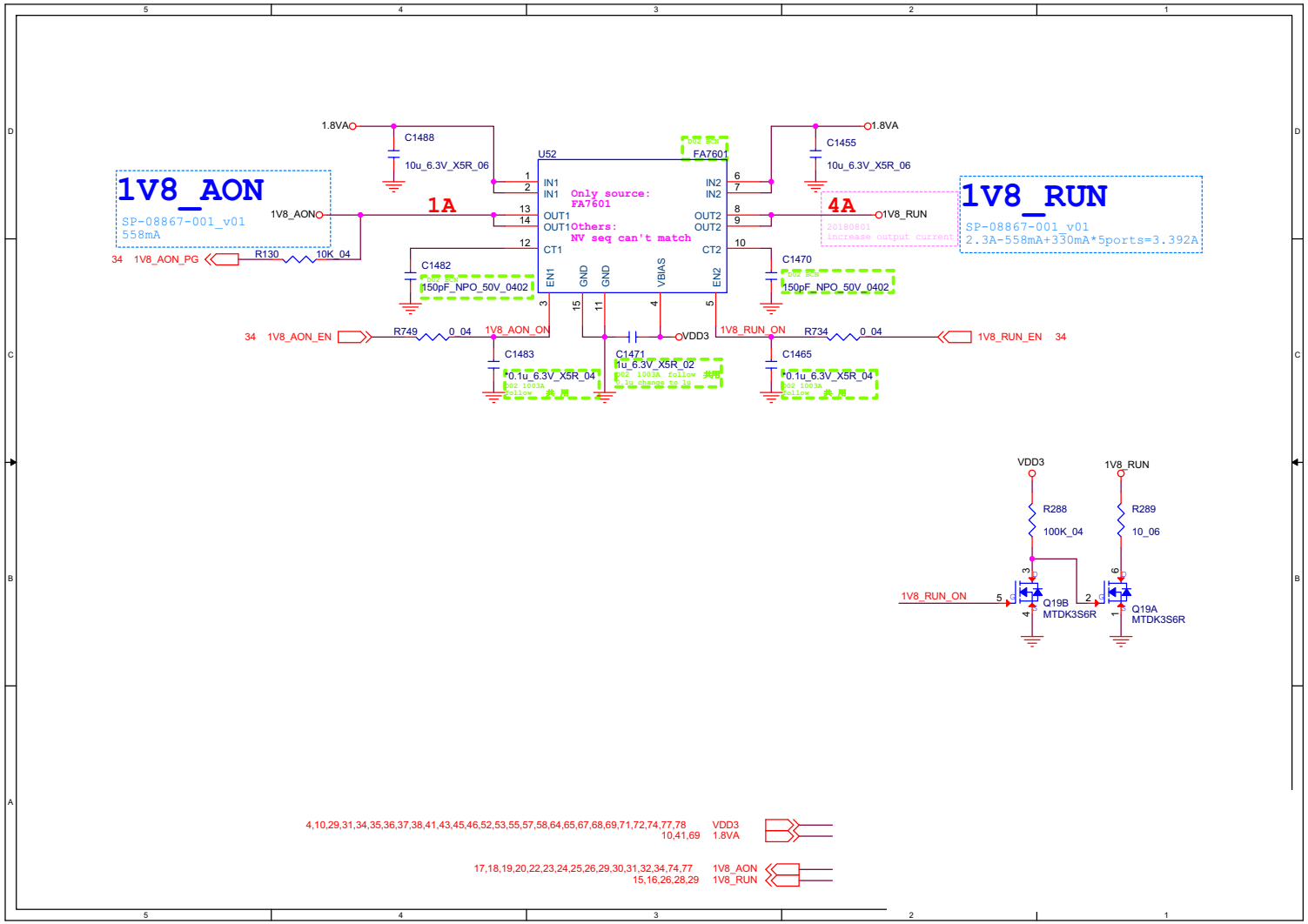

Sheet 66 of 91
PWR_SW
1V8_AON, RUN

VDD3, VDD5

Sheet 67 of 91
VDD3, VDD5

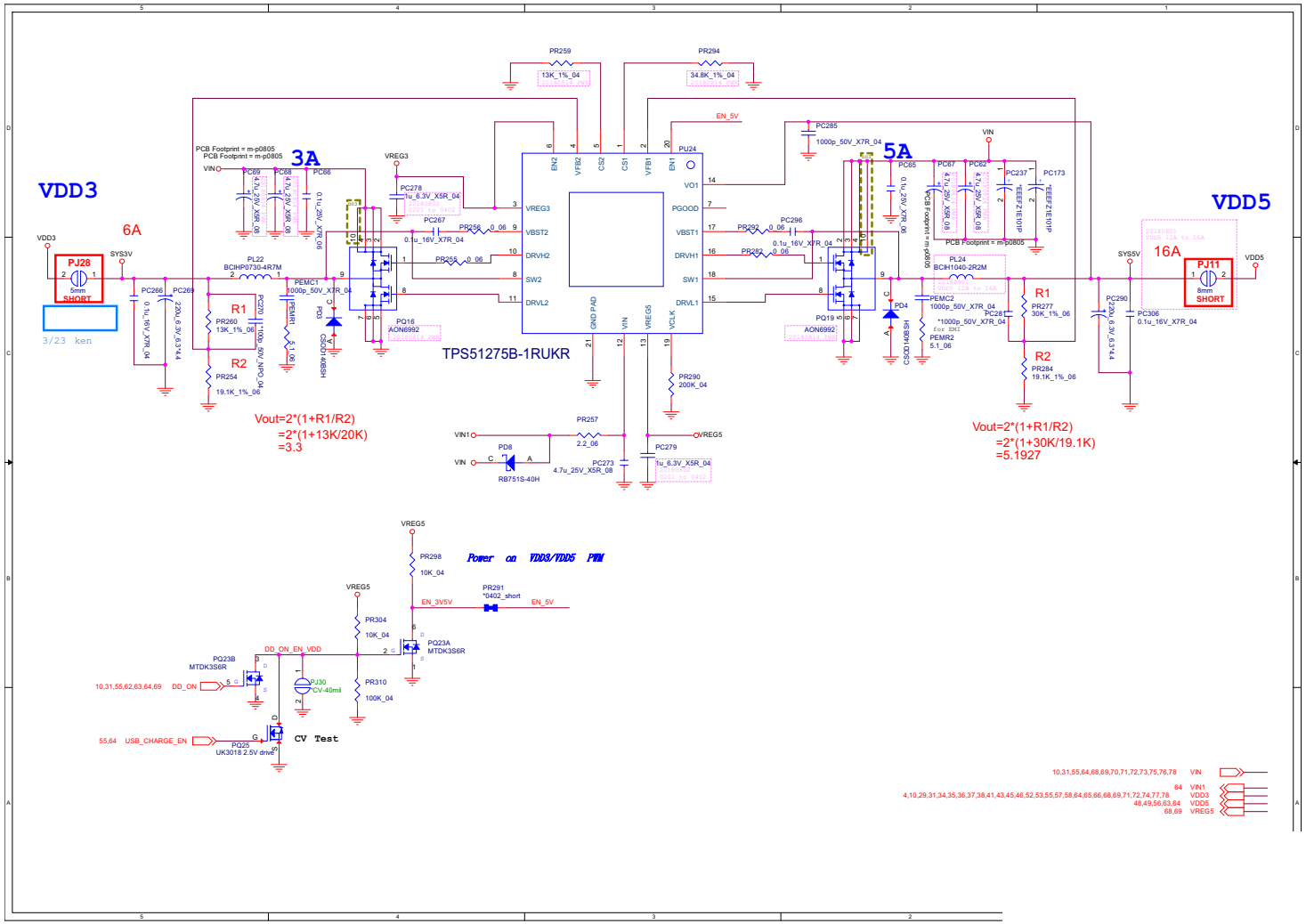

DDR 1.2V, 0.6VS, 2.5V

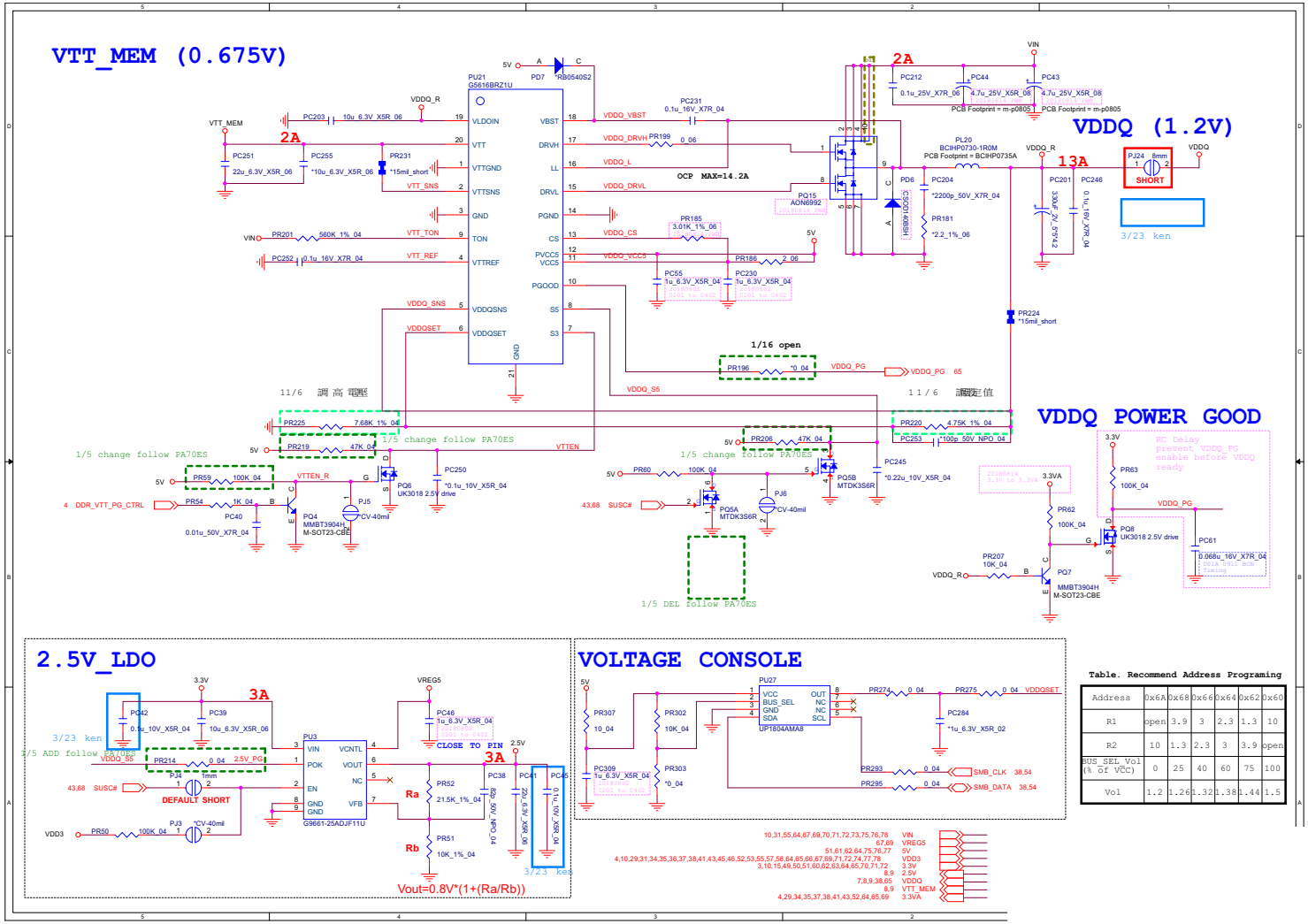

Address	0x6A	0x68	0x66	0x64	0x62	0x60
R1	open	3.9	3	2.3	1.3	10
R2	10	1.3	2.3	3	3.9	open
BUS_SEL Vol (% of VCC)	0	25	40	60	75	100
Vol	1.2	1.26	1.32	1.38	1.44	1.5

Sheet 68 of 91
DDR 1.2V, 0.6VS, 2.5V

1.8VA, 1.05VA

Sheet 69 of 91
1.8VA, 1.05VA

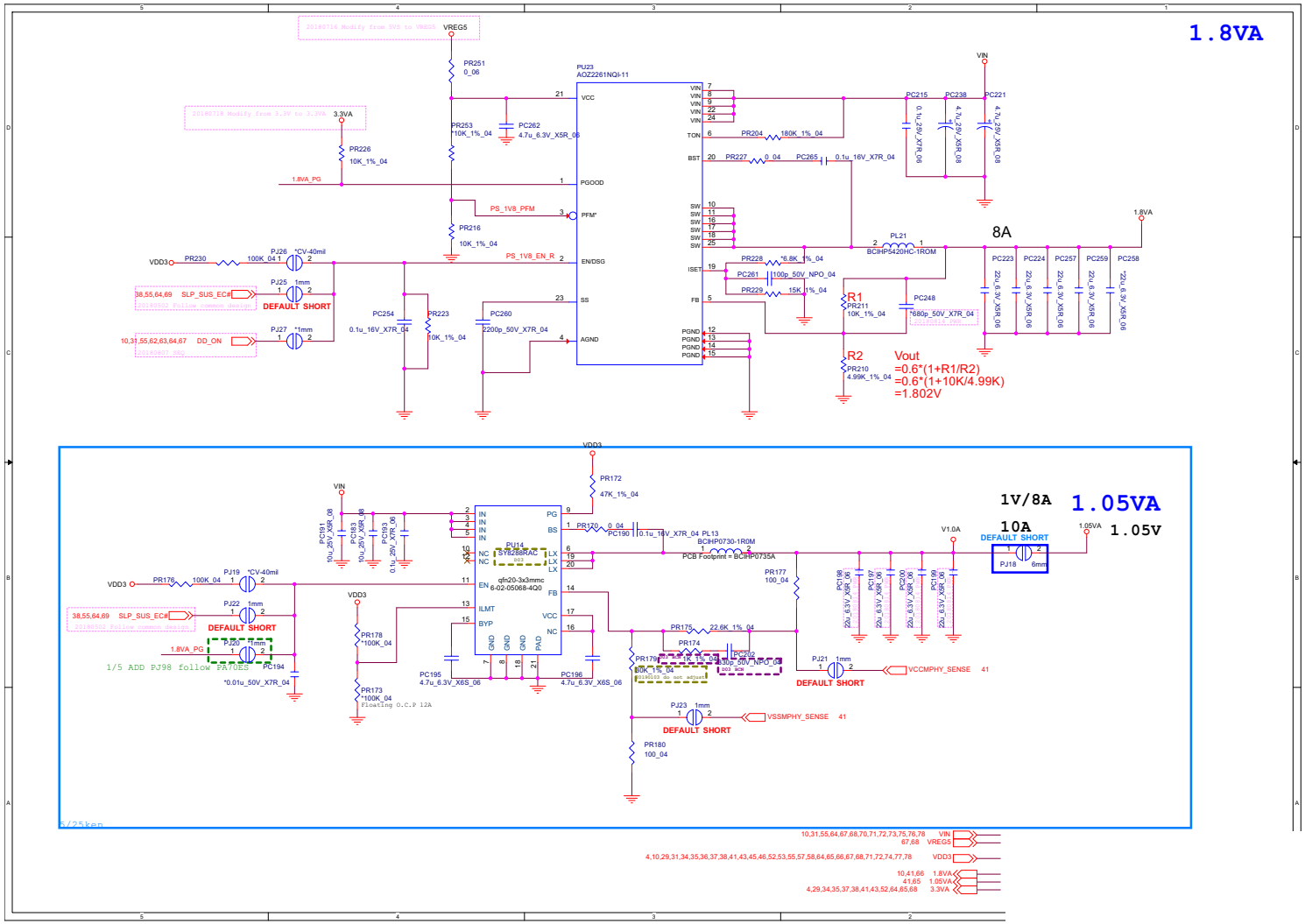

VCCIO

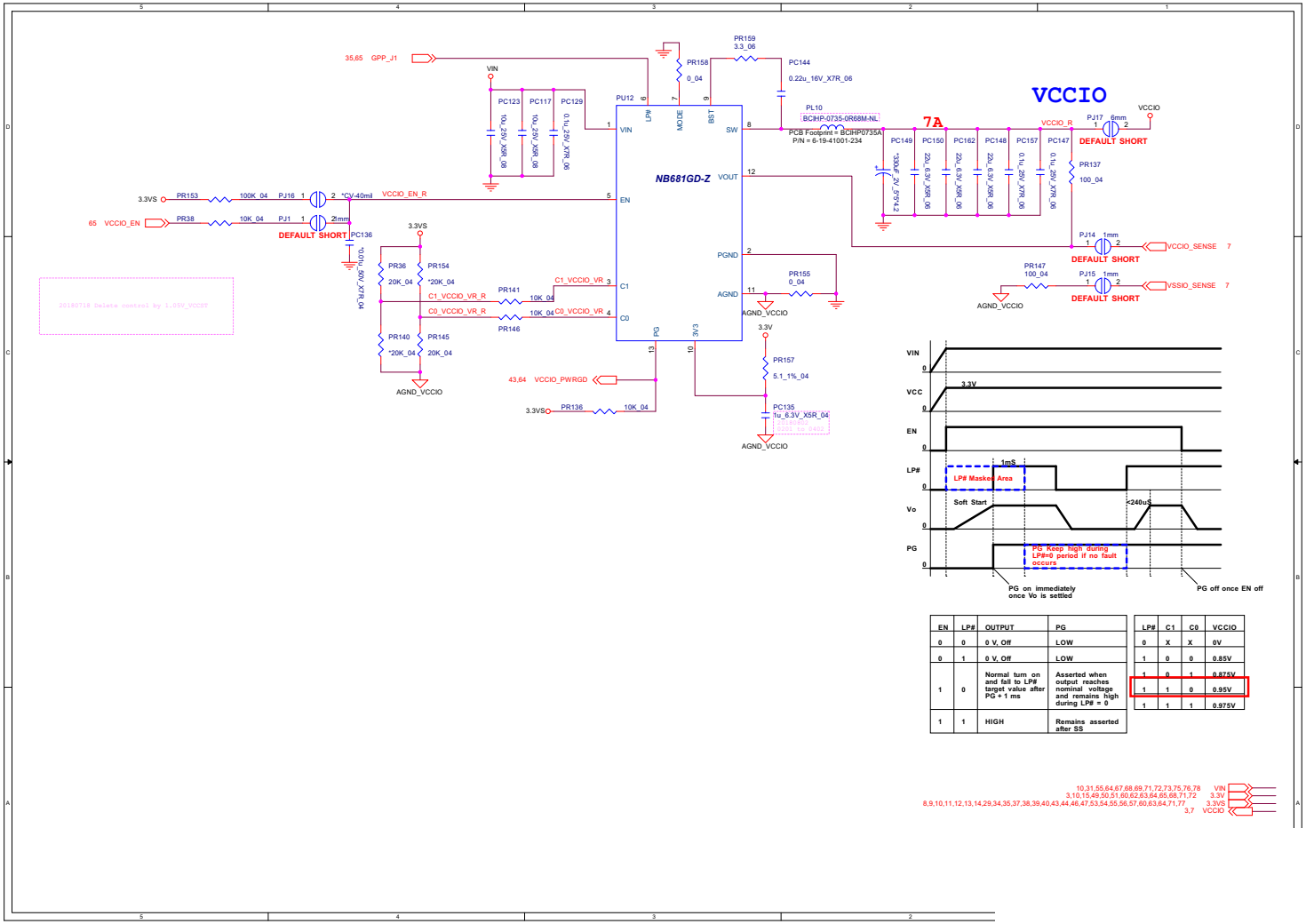

EN	LP#	OUTPUT	PG
0	0	0 V, Off	LOW
0	1	0 V, Off	LOW
1	0	Normal turn on and fall to LP# target value after PG + 1 ms	Asserted when output reaches nominal voltage and remains high during LP# = 0
1	1	HIGH	Remains asserted after SS

LP#	C1	C0	VCCIO
0	X	X	0V
1	0	0	0.85V
1	0	1	0.875V
1	1	0	0.95V
1	1	1	0.975V

Sheet 70 of 91
VCCIO

VCore, VCCGT, VCCSA

Sheet 71 of 91
VCore

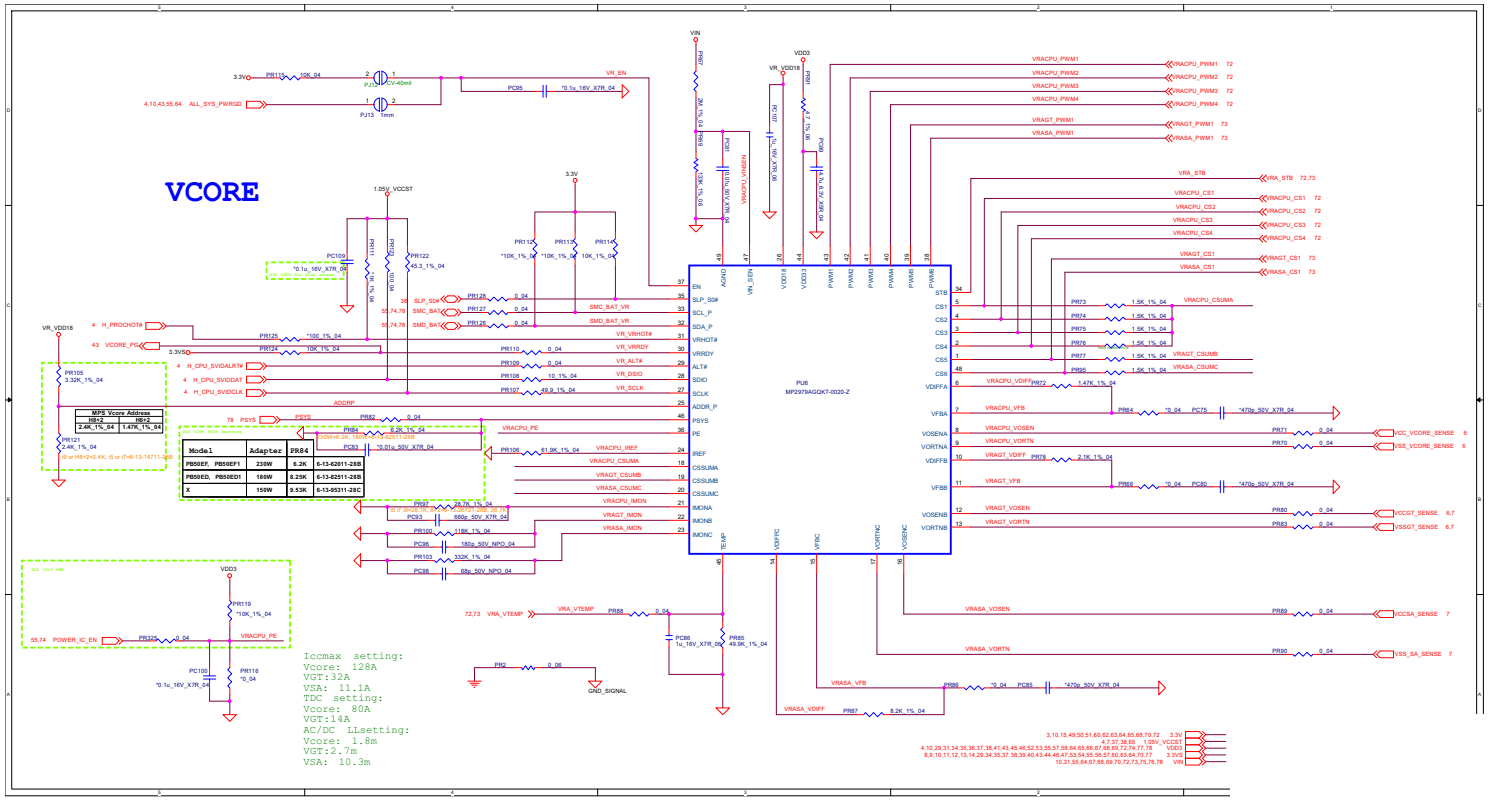

VCore Output Stage

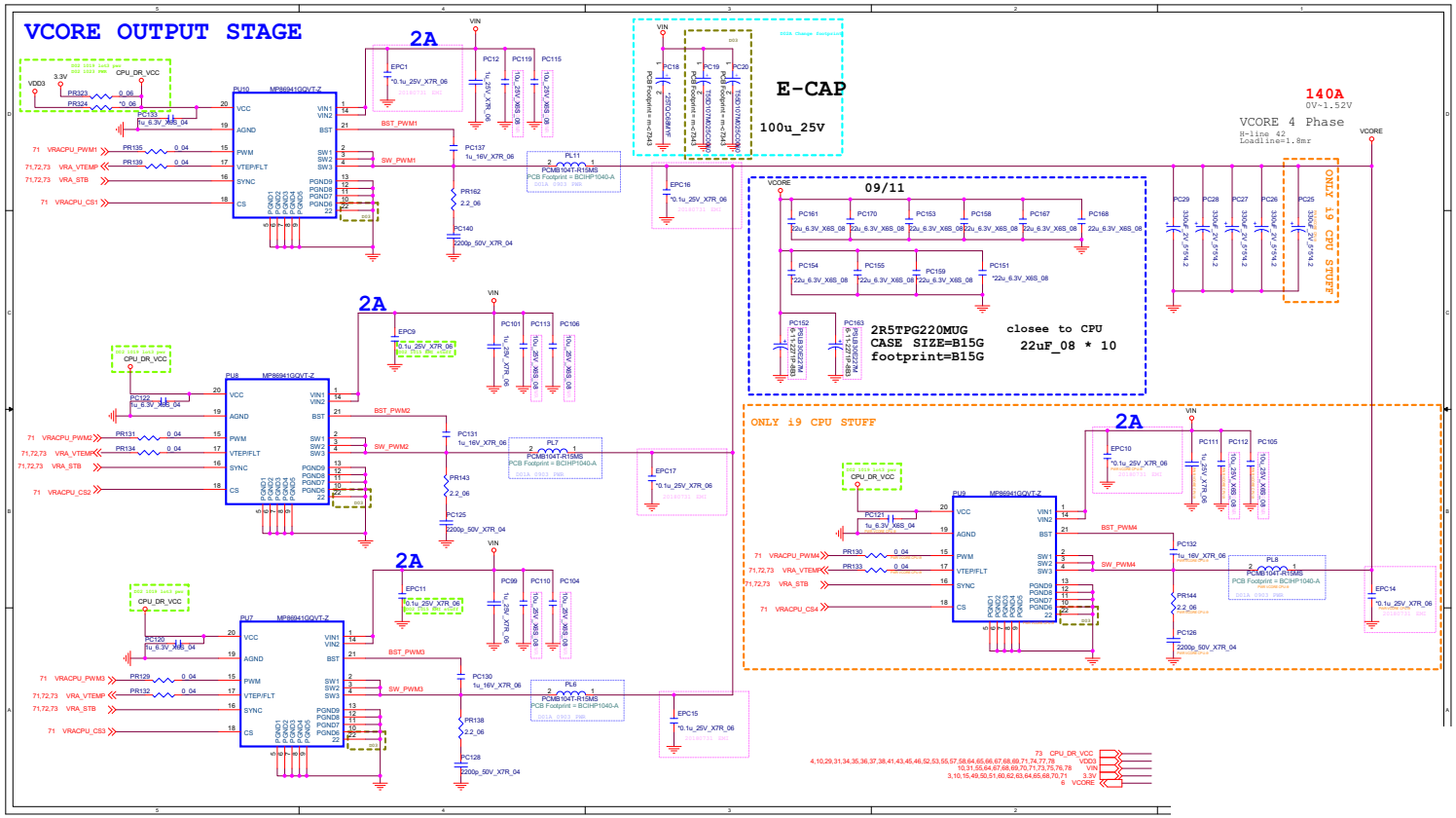

Sheet 72 of 91
VCore Output Stage

VCCGT, VCCSA

Sheet 73 of 91
VCCGT, VCCSA

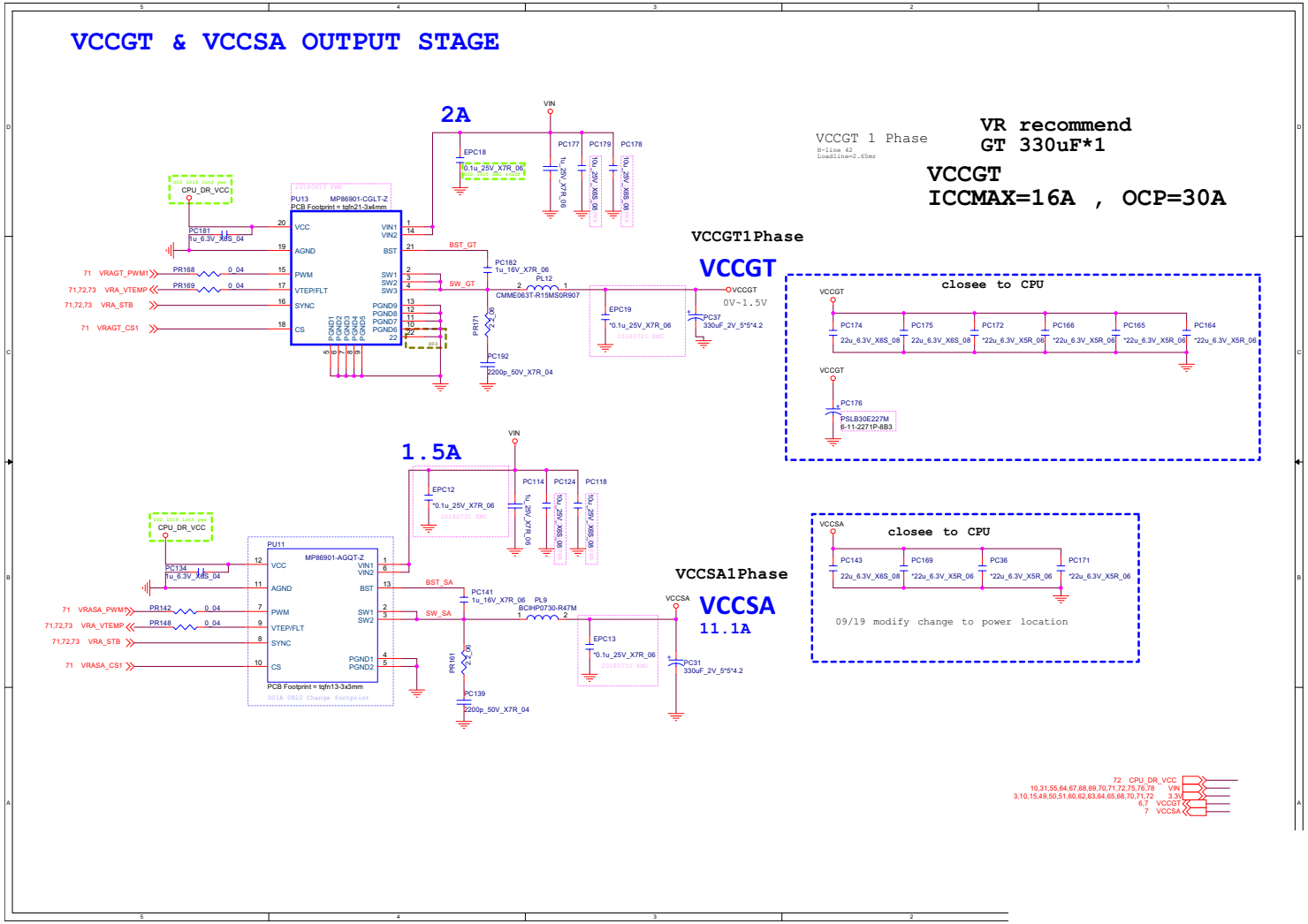

NVVDD 1 & 2

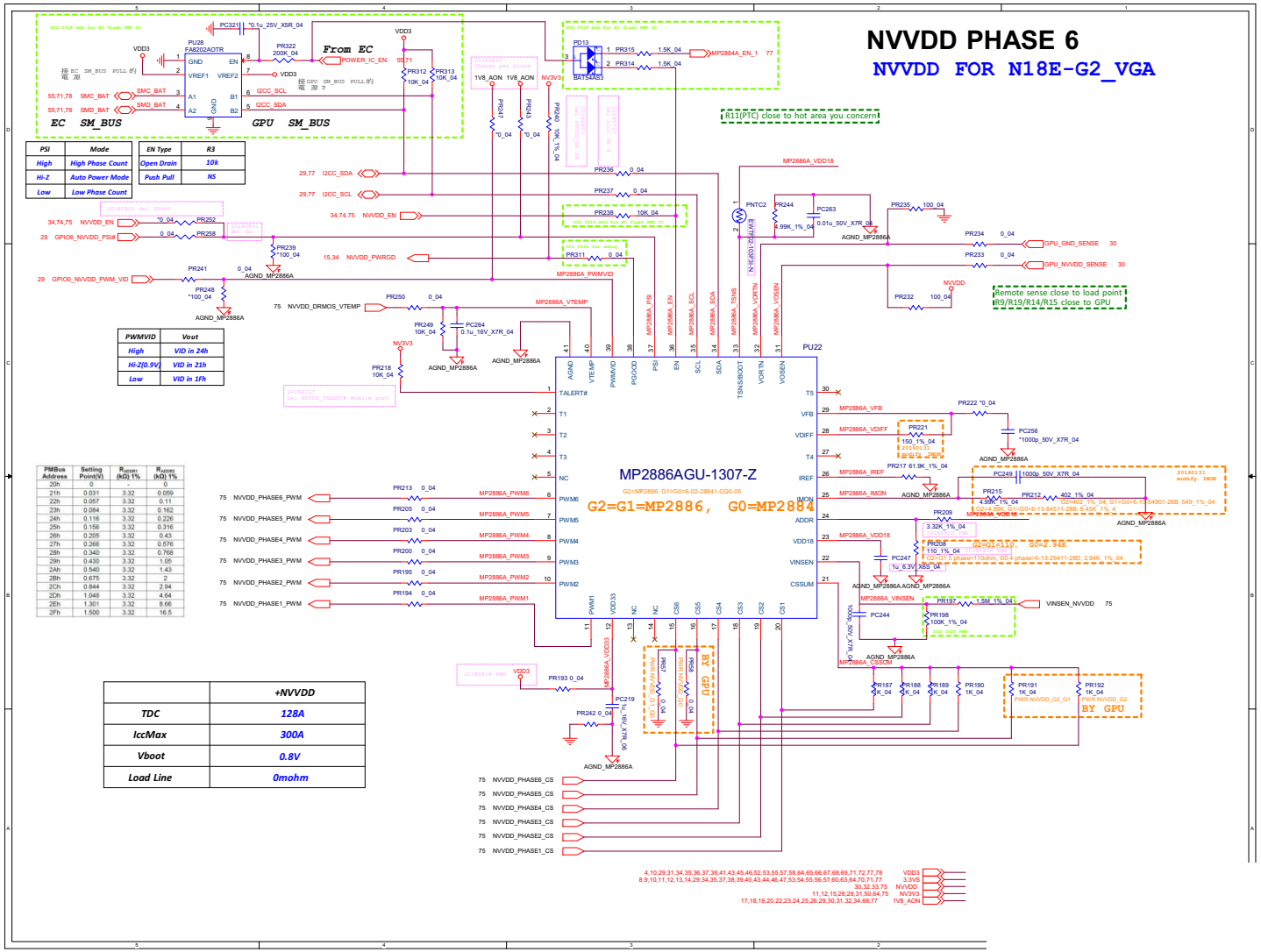

PSI	Mode
High	High Phase Count
Hi-Z	Auto Power Mode
Low	Low Phase Count

EN Type	R3
Open Drain	10k
Push Pull	NS

PWMVID	Vout
High	VID in 24h
Hi-Z(0.9V)	VID in 21h
Low	VID in 1Fh

PMBus Address	Setting Point(V)	R_{CSSP} (kΩ) 1%	R_{CSSN} (kΩ) 1%
20h	0	-	0
21h	0.031	3.32	0.069
22h	0.057	3.32	0.11
23h	0.084	3.32	0.162
24h	0.116	3.32	0.226
25h	0.156	3.32	0.316
26h	0.205	3.32	0.43
27h	0.266	3.32	0.576
28h	0.340	3.32	0.768
29h	0.430	3.32	1.05
2Ah	0.540	3.32	1.43
2Bh	0.675	3.32	2
2Ch	0.844	3.32	2.94
2Dh	1.048	3.32	4.64
2Eh	1.301	3.32	8.66
2Fh	1.500	3.32	16.5

	+NVVDD
TDC	128A
IccMax	300A
Vboot	0.8V
Load Line	0mohm

Sheet 74 of 91
NVVDD 1 & 2

NVVDD 3

Sheet 75 of 91
NVVDD 3

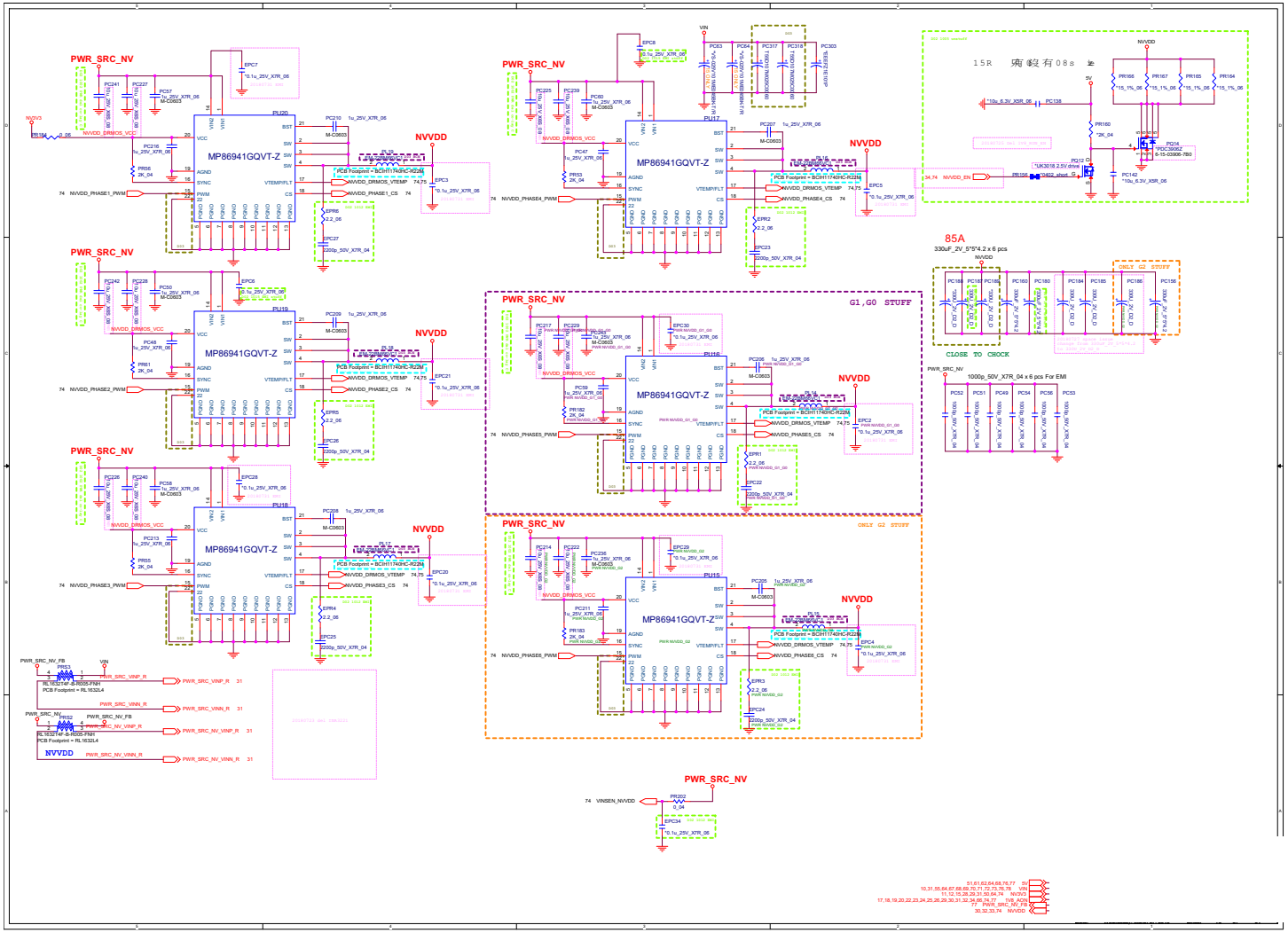

PEX_VDD

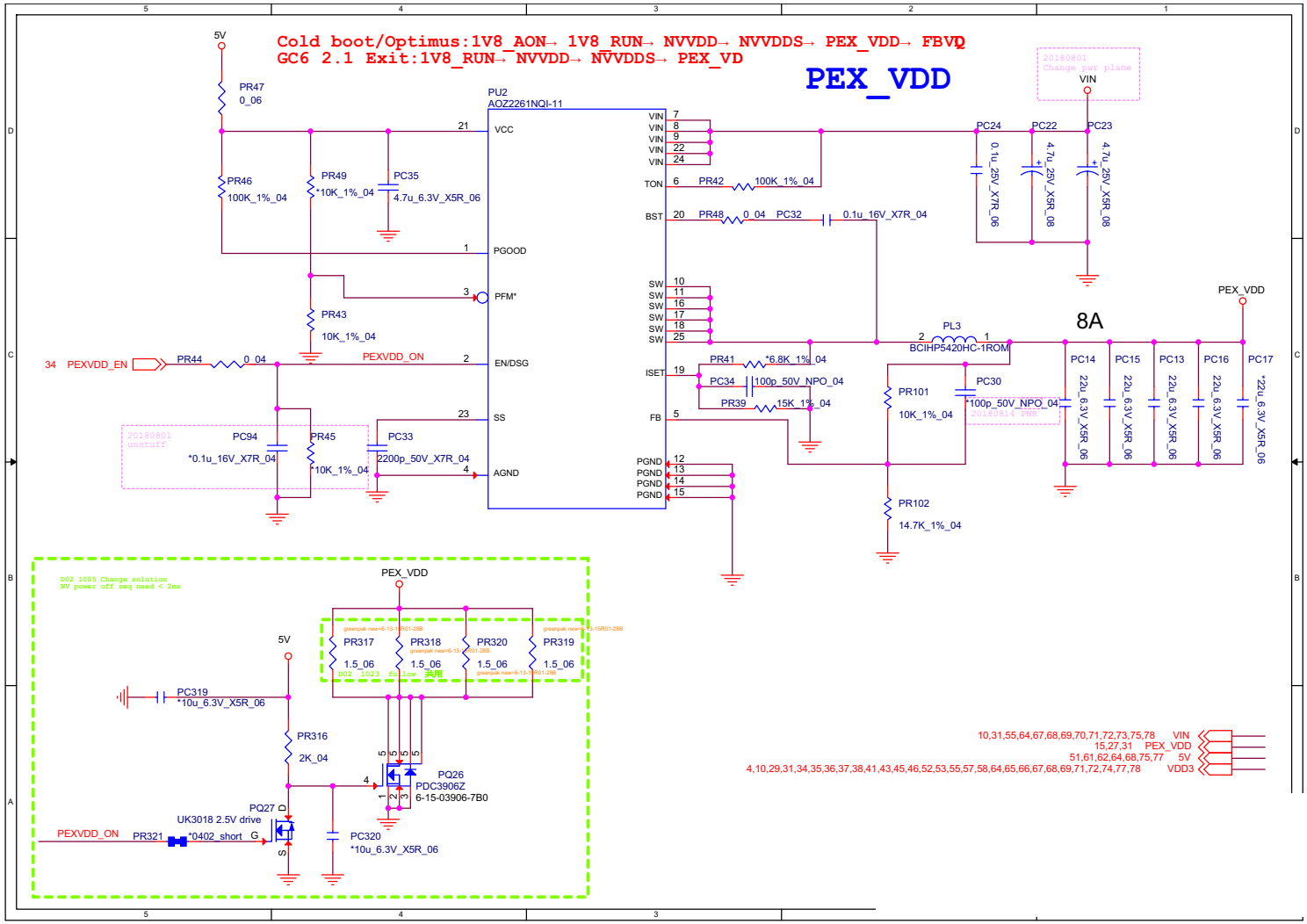

Sheet 76 of 91
PEX_VDD

FBVDDQ

Sheet 77 of 91
FBVDDQ

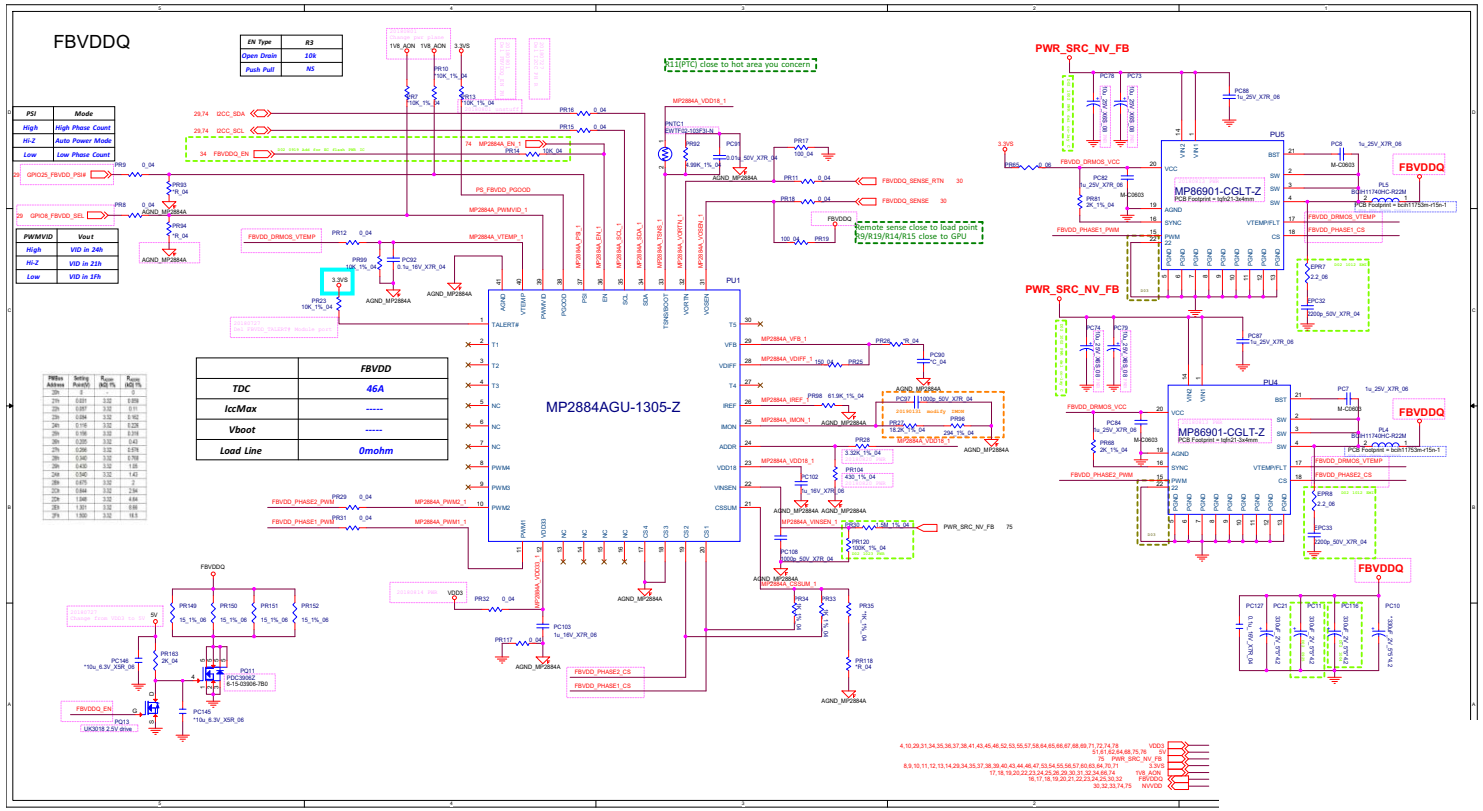

AC-In, Charger

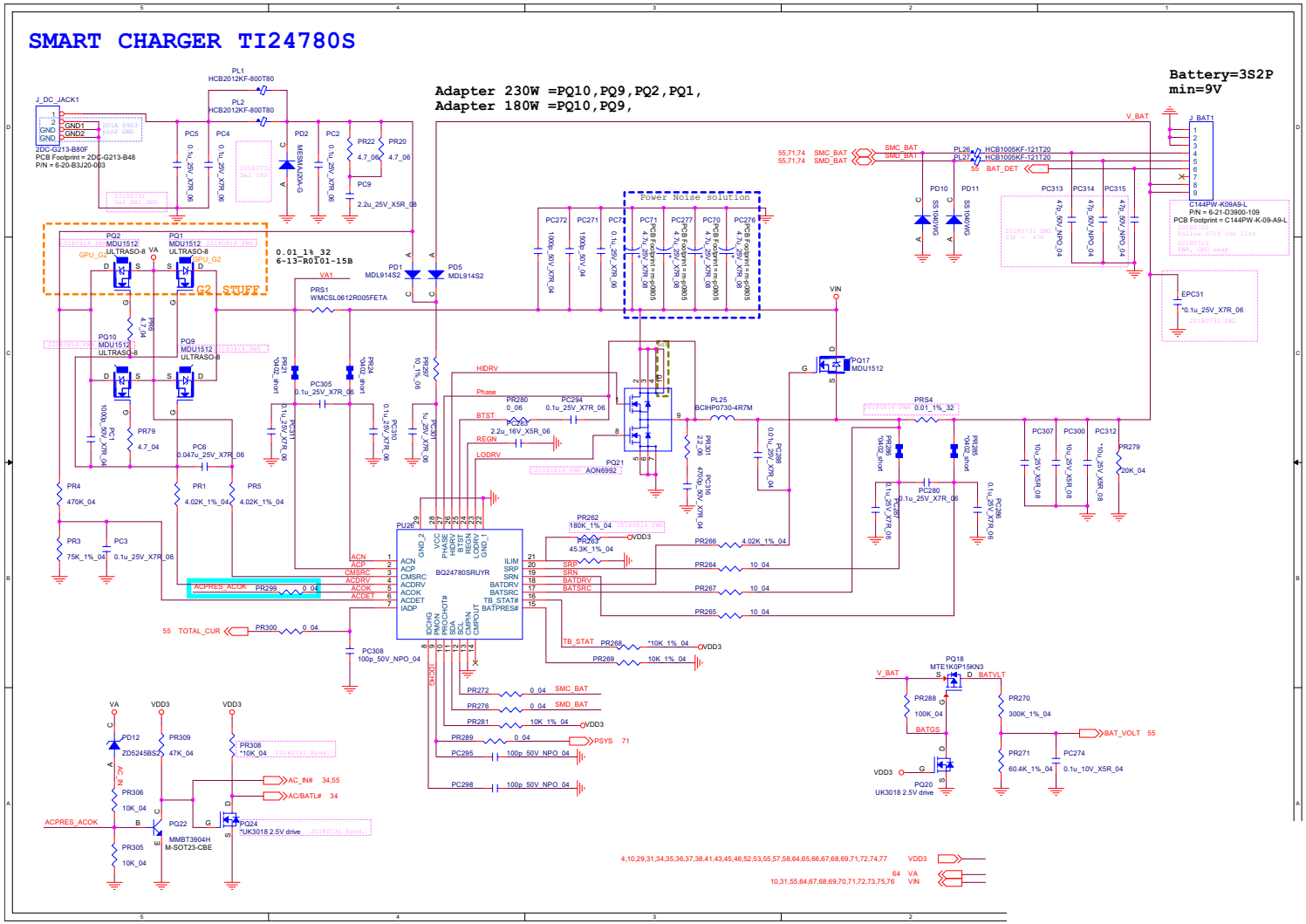

Sheet 78 of 91
AC-In, Charger

LED Board

Sheet 79 of 91
LED Board

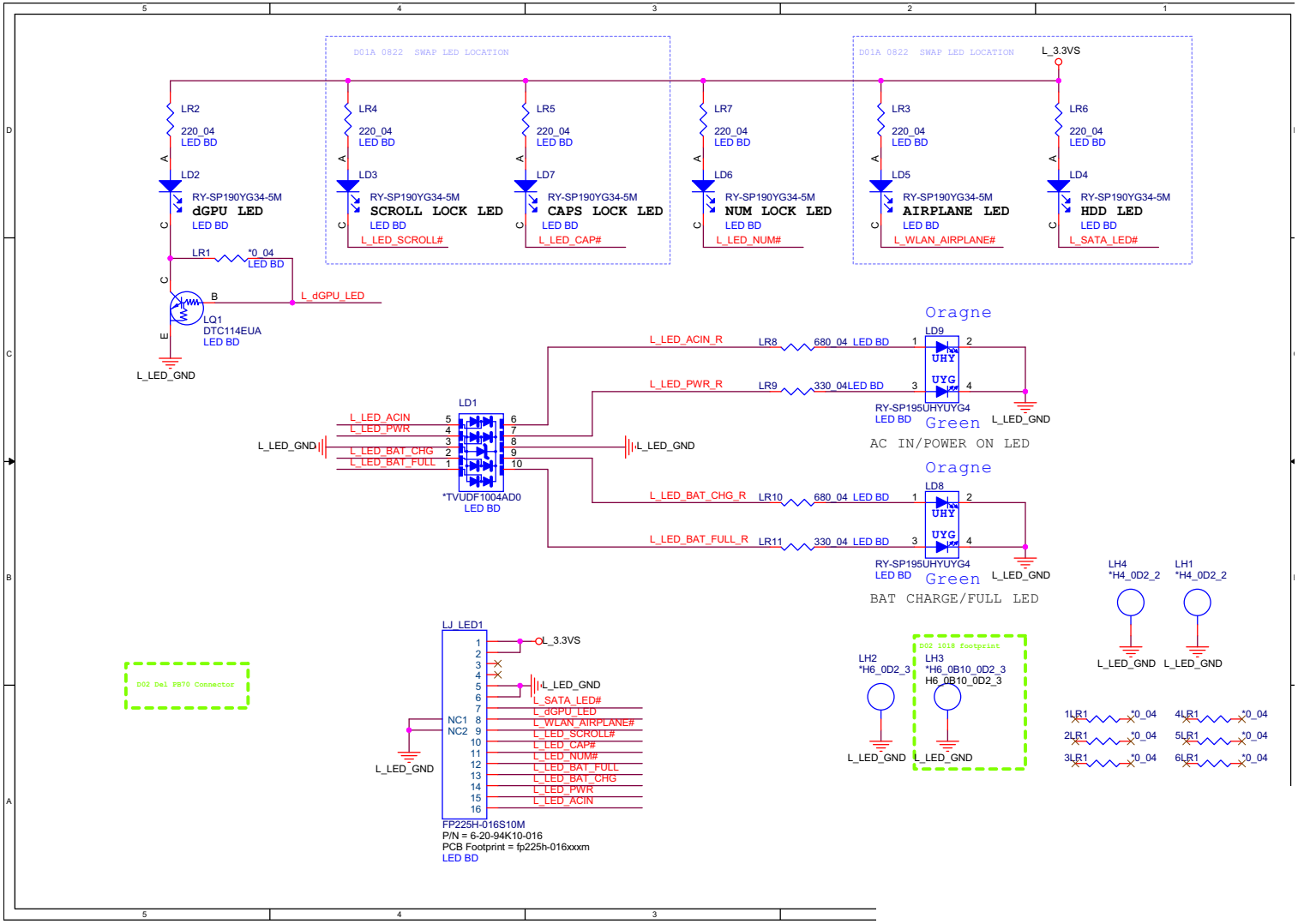

Power Board

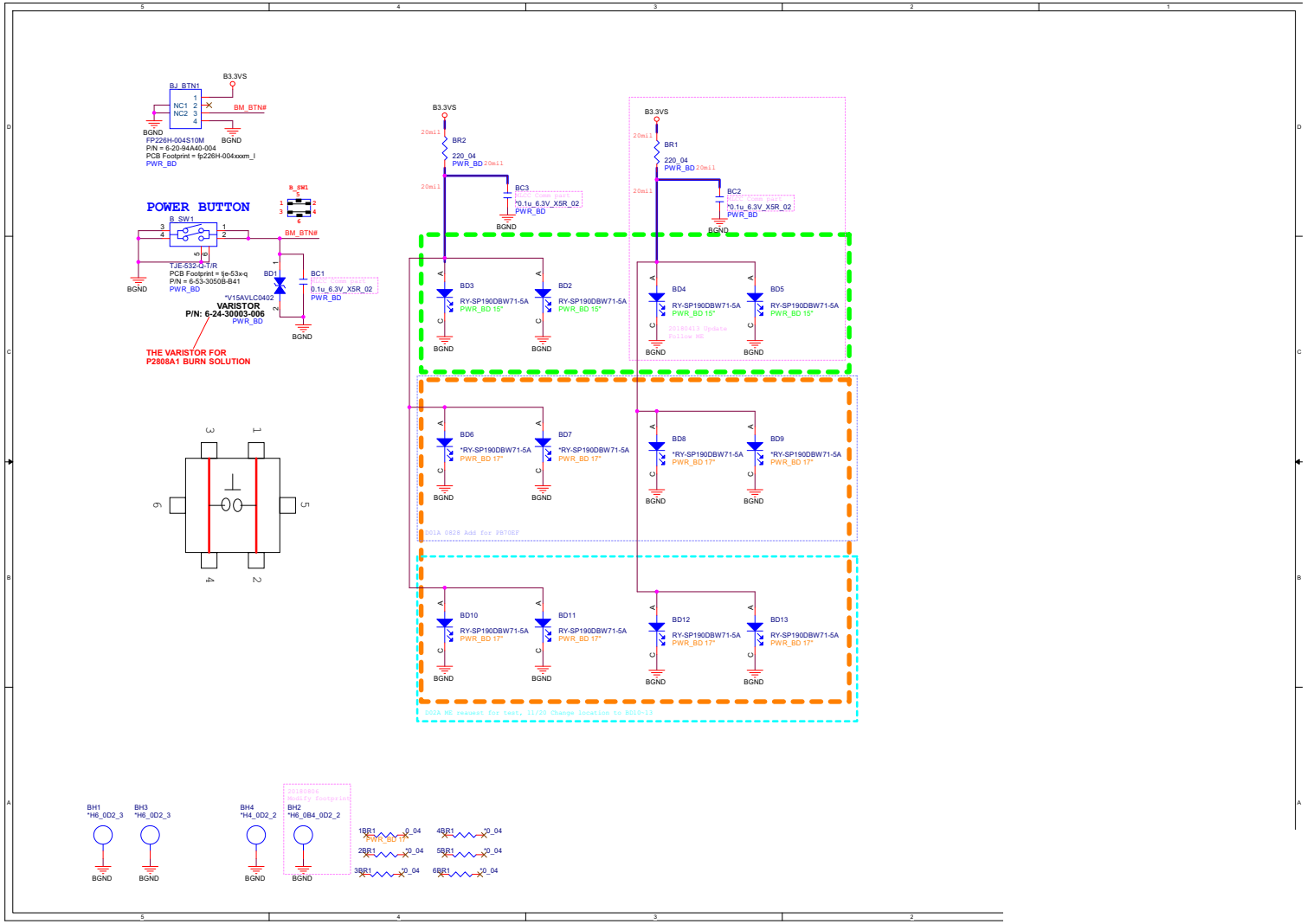

Sheet 80 of 91
Power Board

HDD Board

Sheet 81 of 91
HDD Board

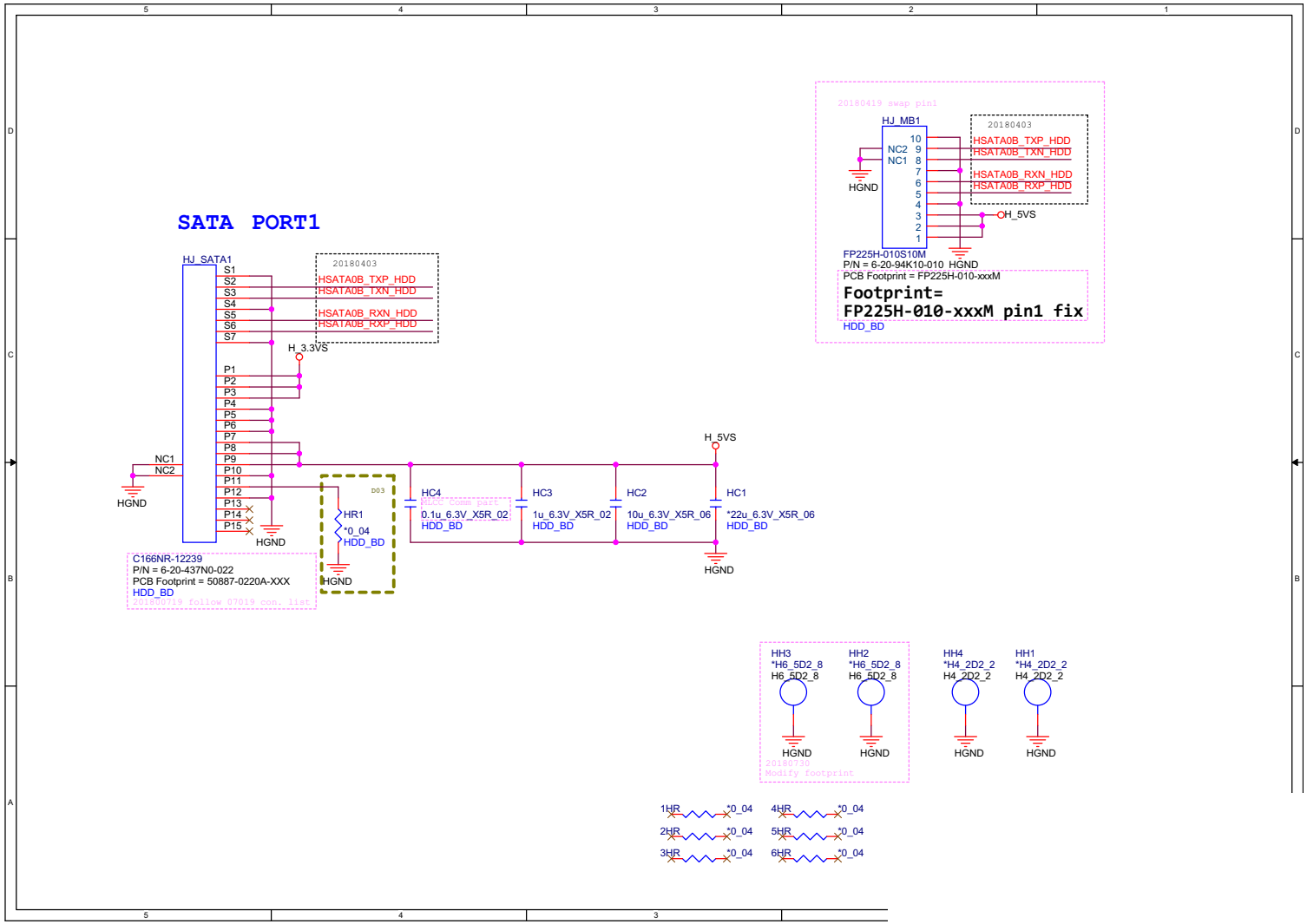

Audio Board, Fan

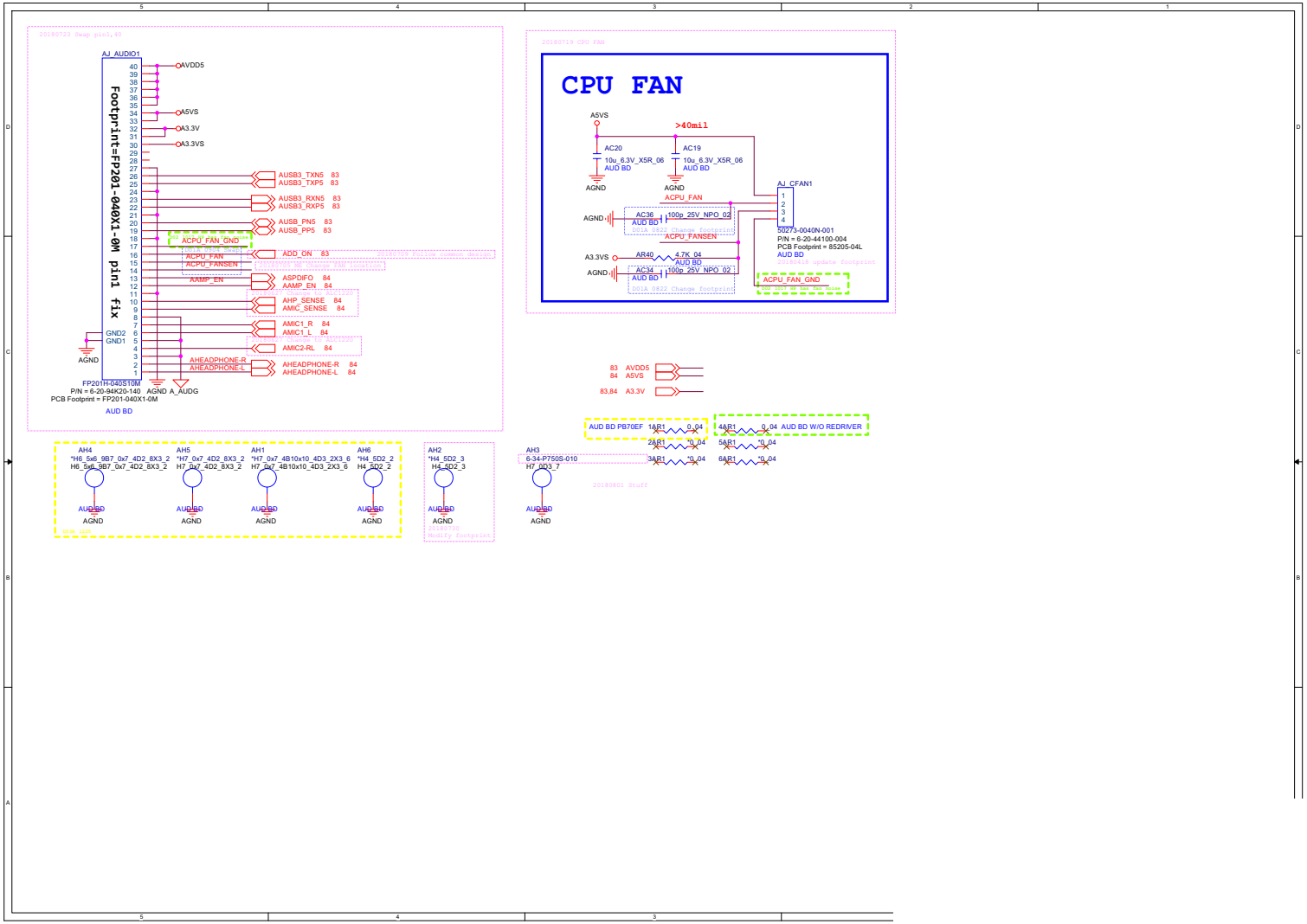

Sheet 82 of 91
Audio Board, Fan

Audio Board_USB

Sheet 83 of 91
Audio Board_USB

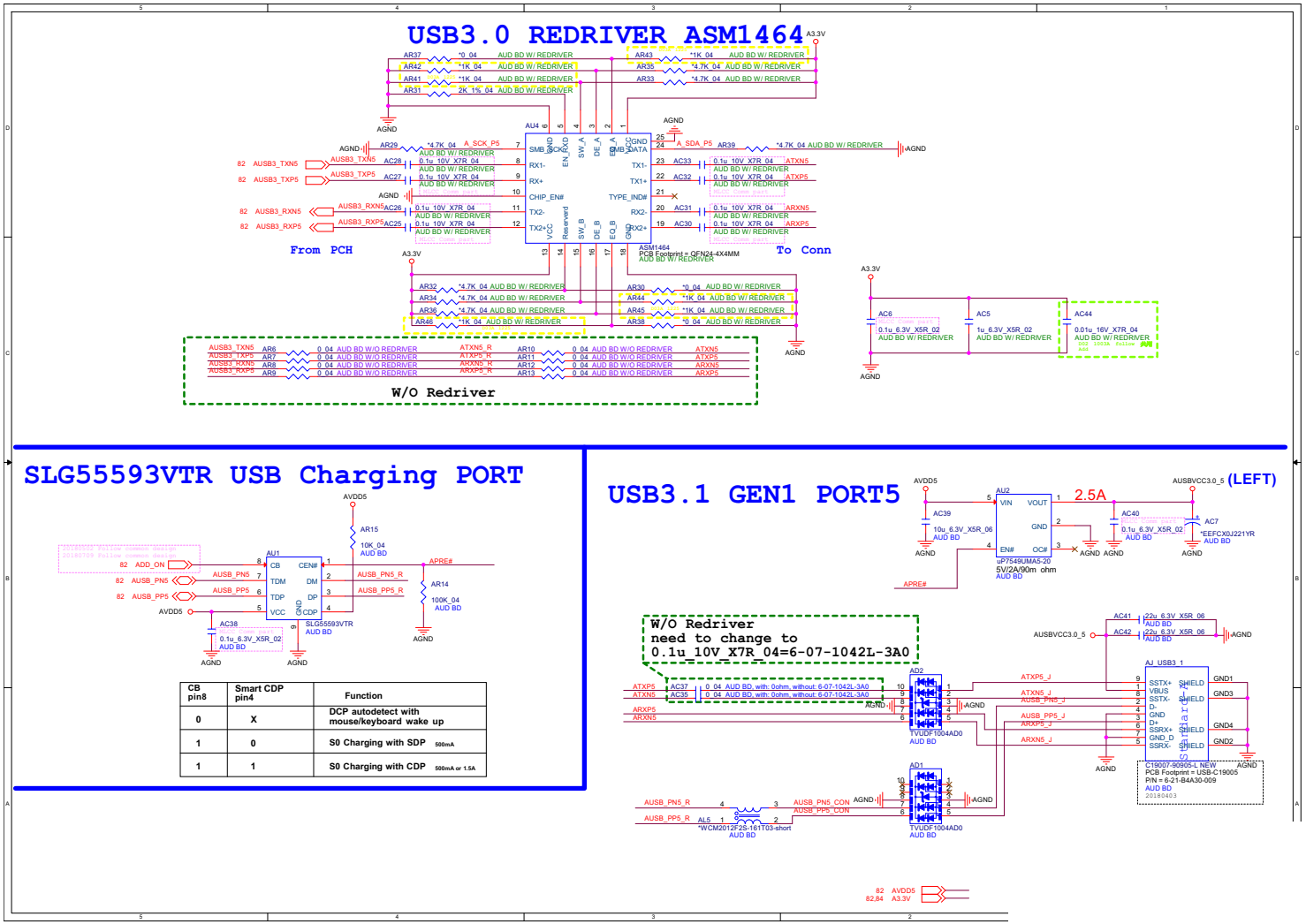

CB pin8	Smart CDP pin4	Function
0	X	DCP autodetect with mouse/keyboard wake up
1	0	S0 Charging with SDP 500mA
1	1	S0 Charging with CDP 500mA or 1.5A

Audio Board_AMP, Jack

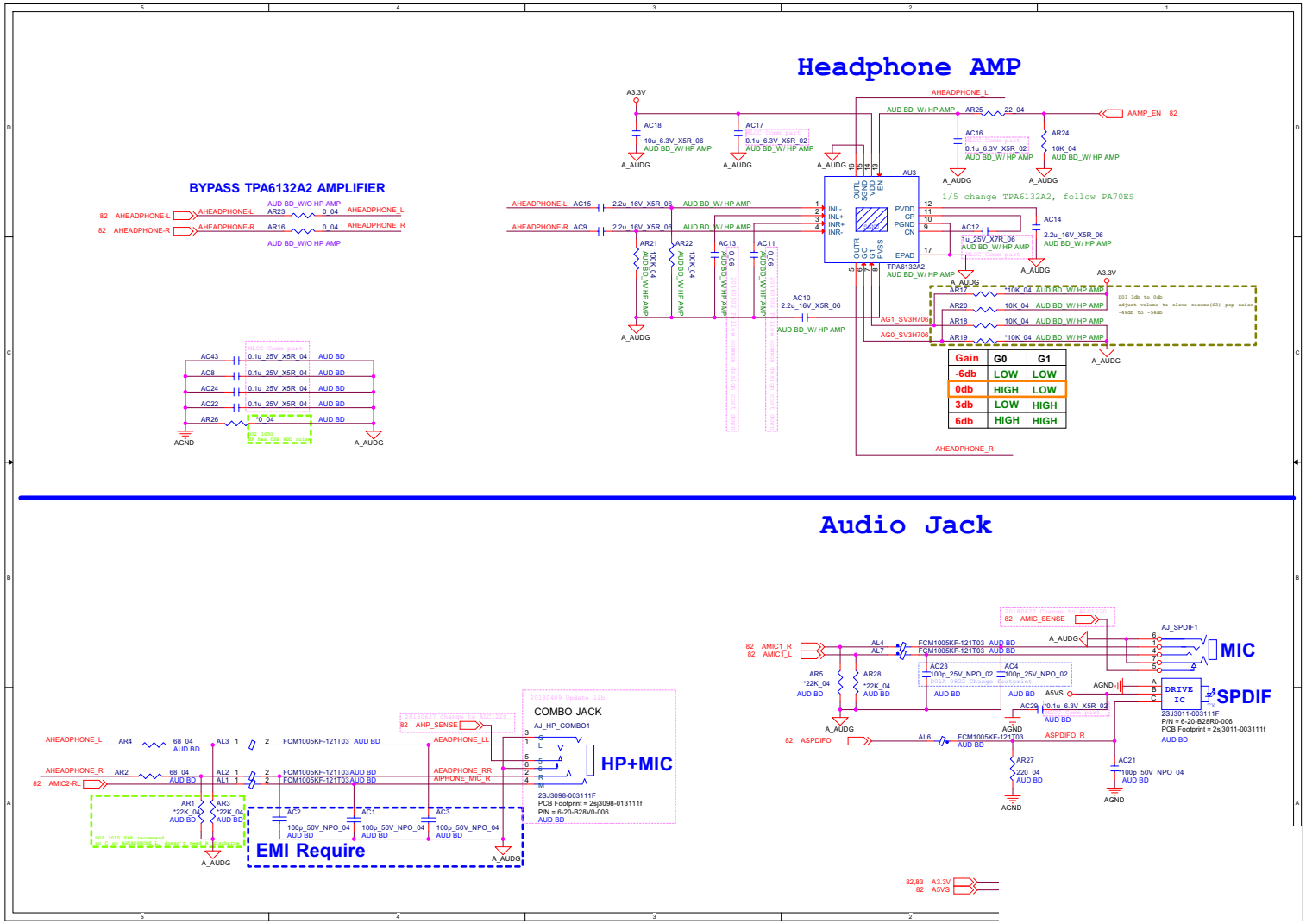

Sheet 84 of 91
Audio Board_AMP, Jack

Per Key Board

Sheet 85 of 91
Per Key Board

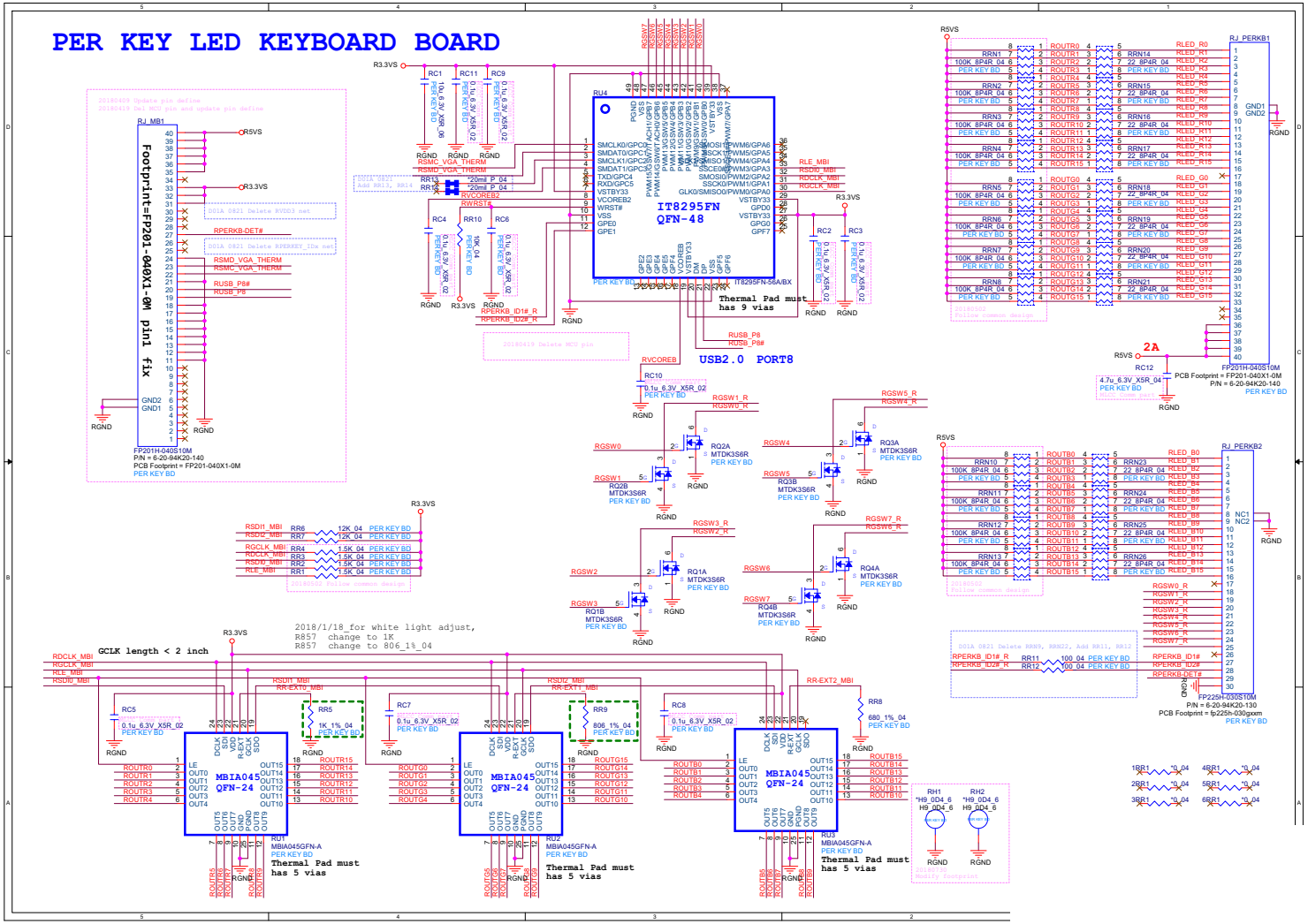

RTS5250

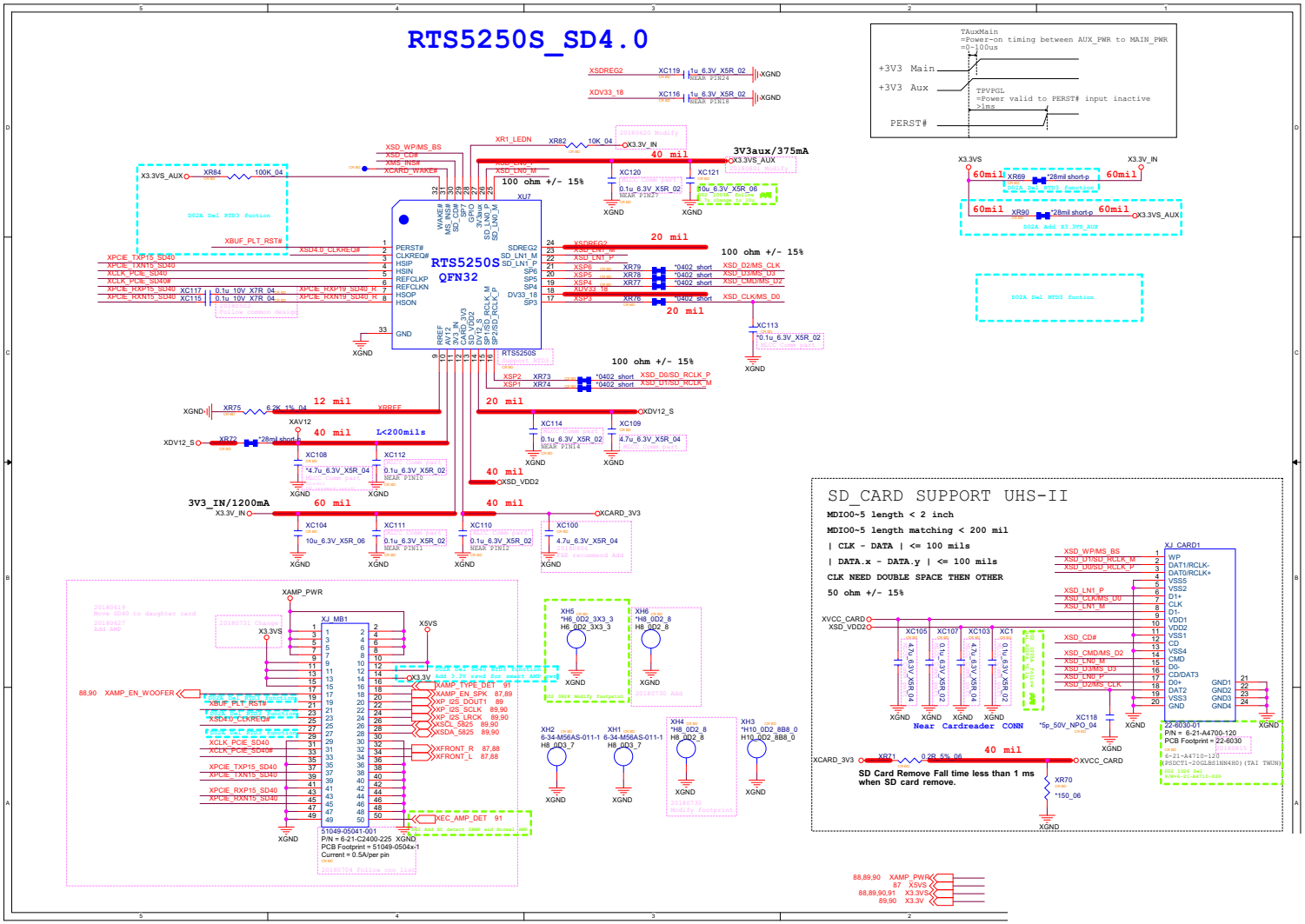

Sheet 86 of 91
RTS5250

AMP TPA2008D2

Sheet 87 of 91
AMP TPA2008D2

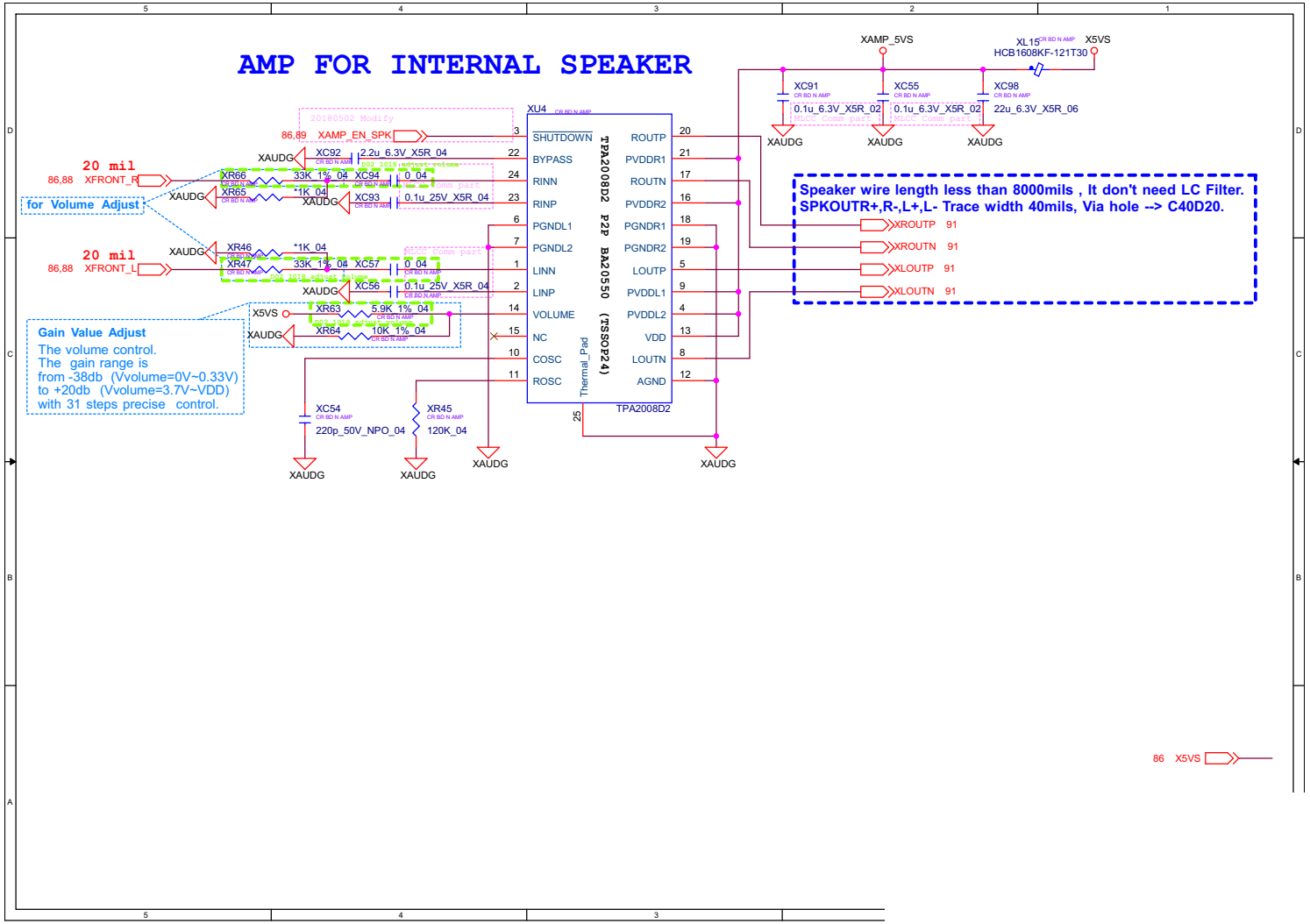

Subwoofer

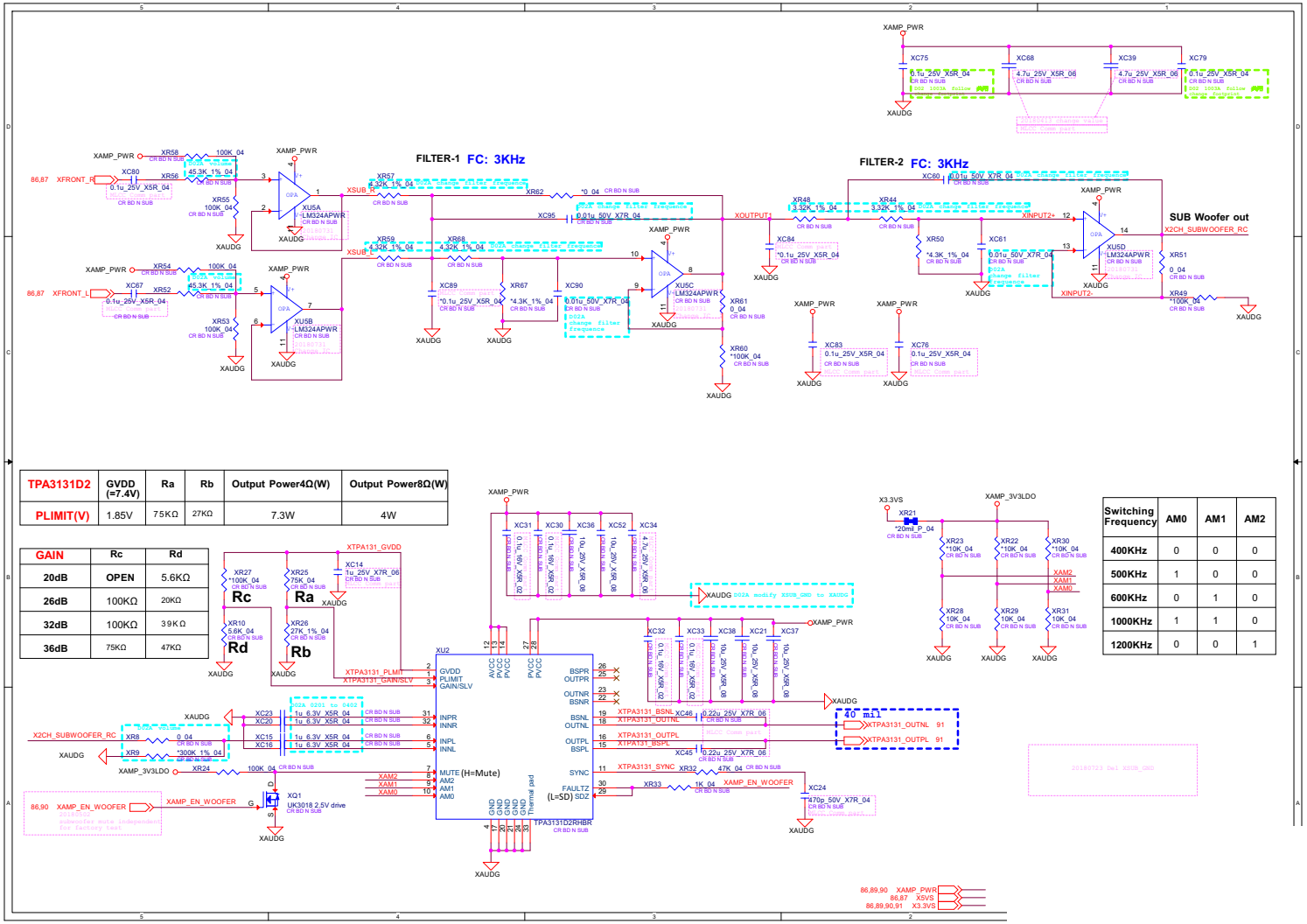

TPA3131D2	GVDD (=7.4V)	Ra	Rb	Output Power4Ω(W)	Output Power8Ω(W)
PLIMIT(V)	1.85V	75KΩ	27KΩ	7.3W	4W

GAIN	Rc	Rd
20dB	OPEN	5.6KΩ
26dB	100KΩ	20KΩ
32dB	100KΩ	39KΩ
36dB	75KΩ	47KΩ

Switching Frequency	AM0	AM1	AM2
400KHz	0	0	0
500KHz	1	0	0
600KHz	0	1	0
1000KHz	1	1	0
1200KHz	0	0	1

Sheet 88 of 91
Subwoofer

Smart AMP

Sheet 89 of 91
Smart AMP

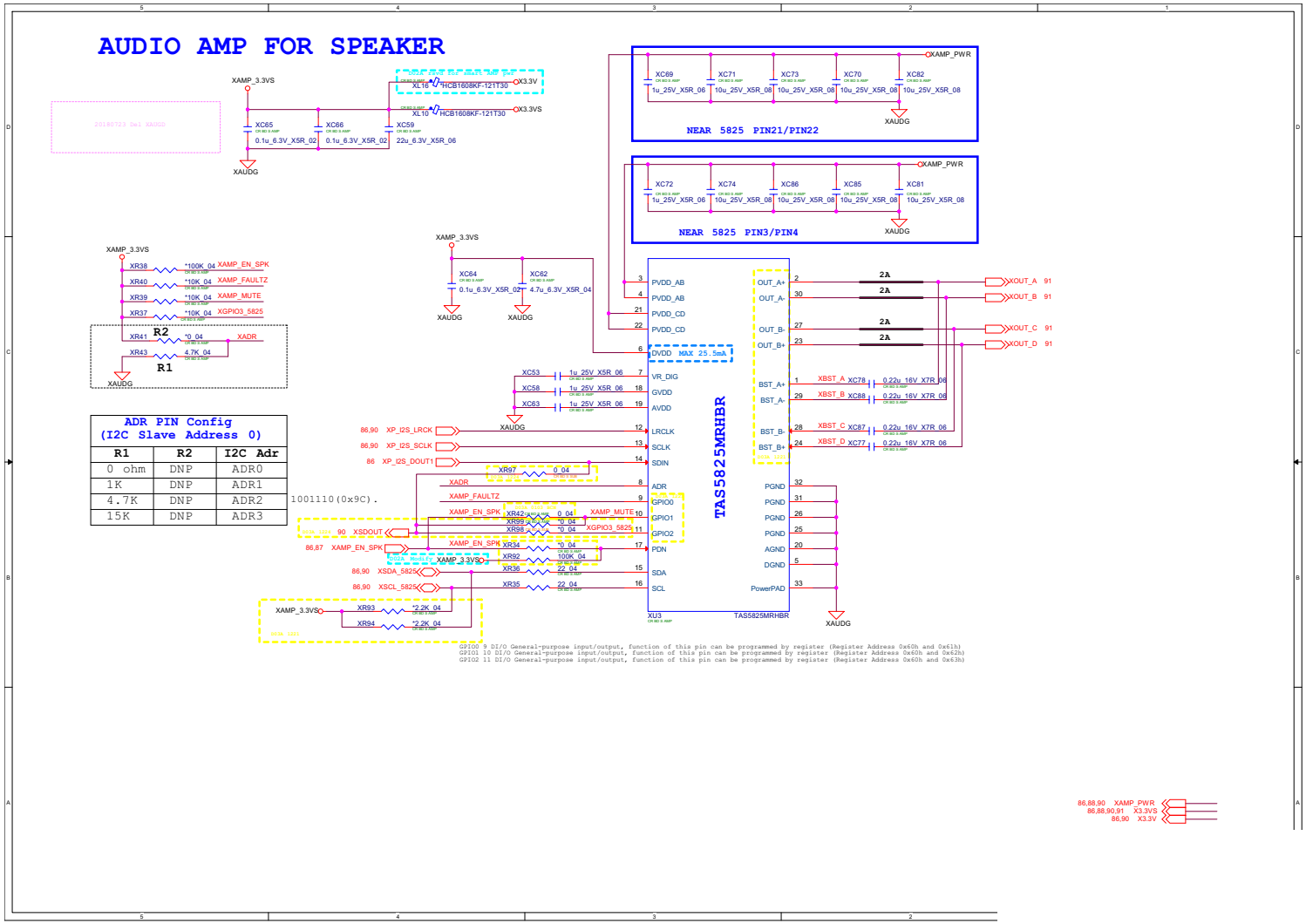

Smart AMP for Subwoofer

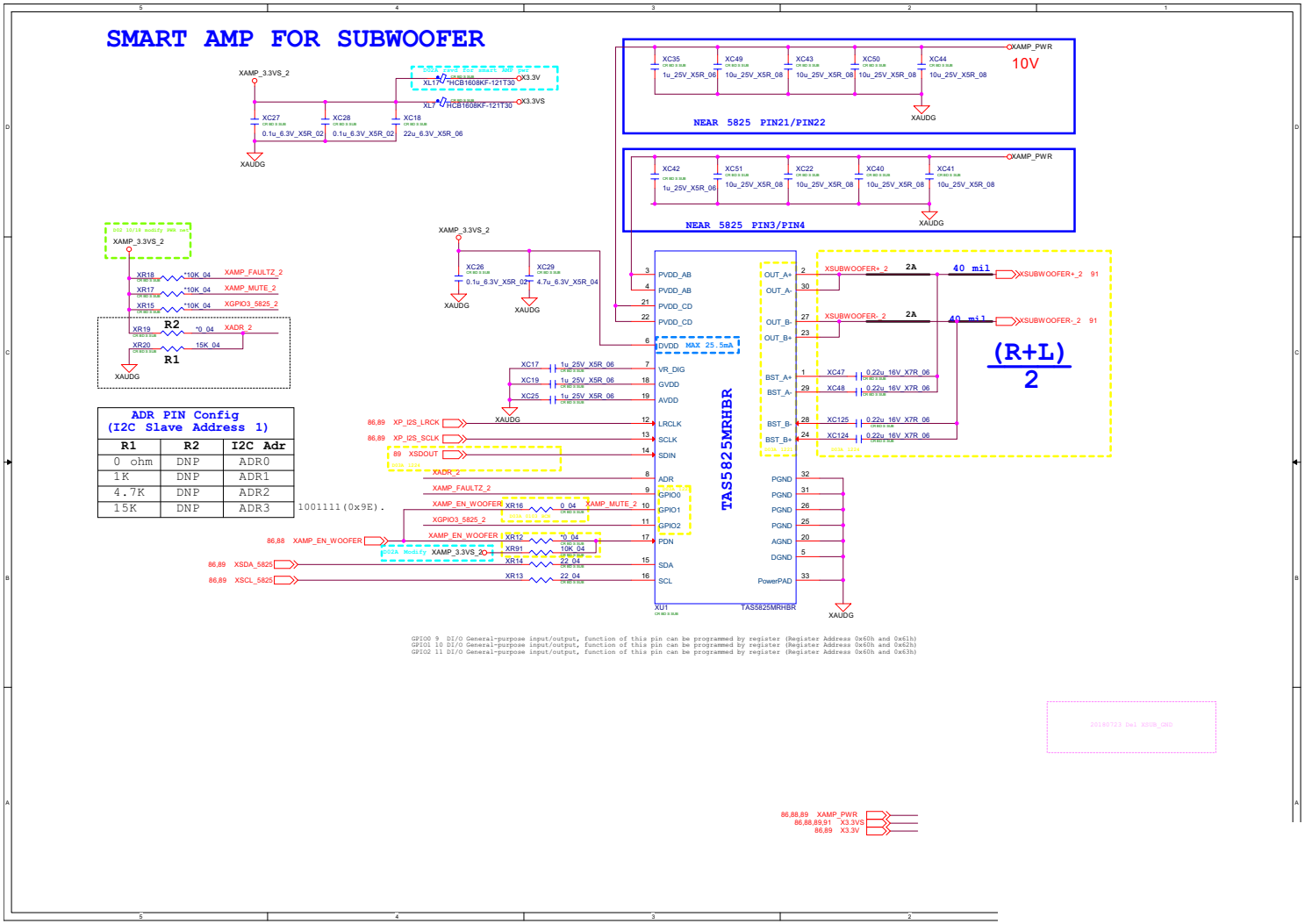

ADR PIN Config (I2C Slave Address 1)		
R1	R2	I2C Adr
0 ohm	DNP	ADR0
1K	DNP	ADR1
4.7K	DNP	ADR2
15K	DNP	ADR3

1001111(0x9E).

Sheet 90 of 91
Samrt AMP for Subwoofer

Speaker Con

Sheet 91 of 91
Speaker Con

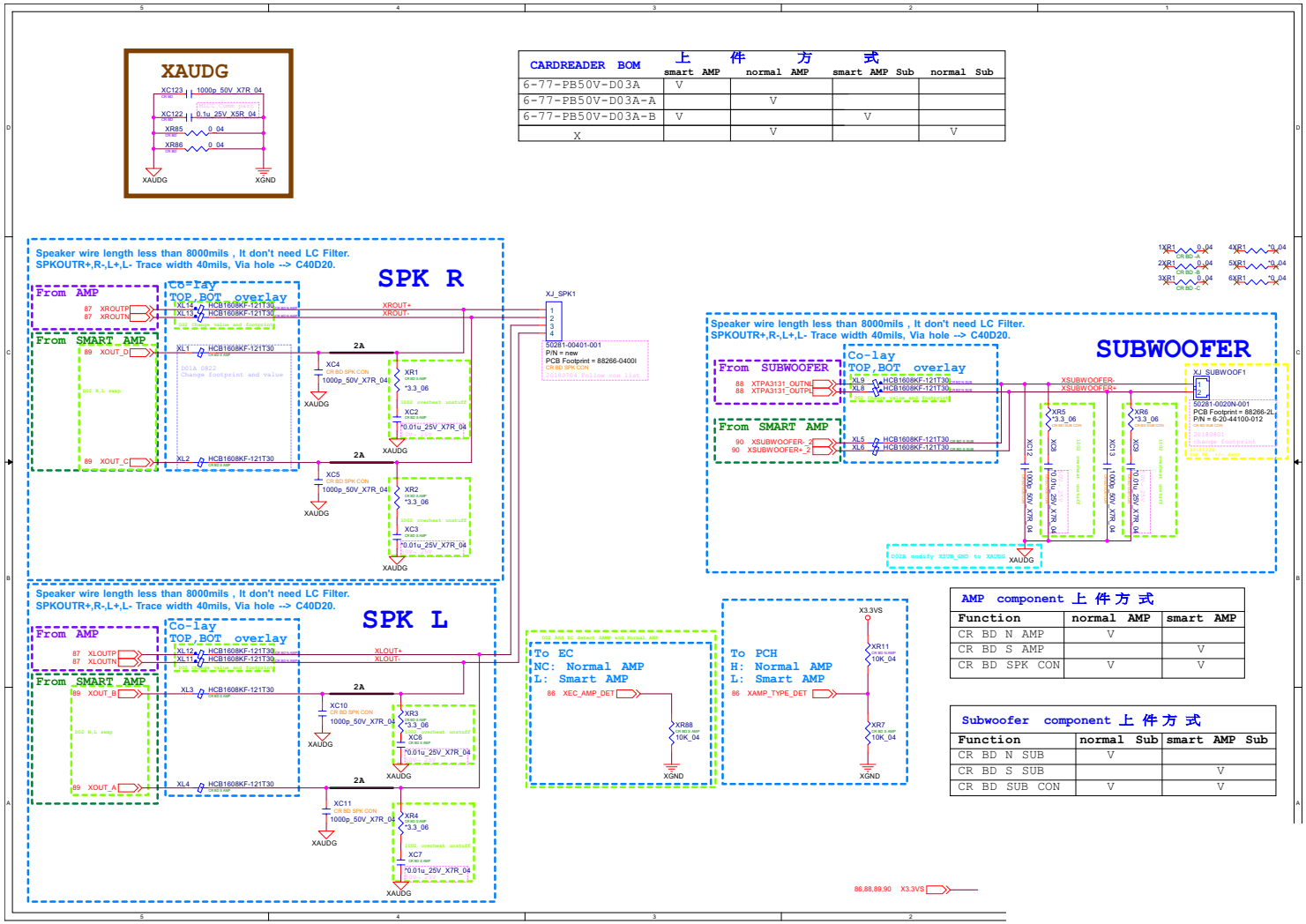

CARDREADER BOM	上 件 方 式 smart AMP	normal AMP	smart AMP Sub	normal Sub
6-77-PB50V-D03A	V			
6-77-PB50V-D03A-A		V		
6-77-PB50V-D03A-B	V		V	
X		V		V

AMP component 上 件 方 式		
Function	normal AMP	smart AMP
CR BD N AMP	V	
CR BD S AMP		V
CR BD SPK CON	V	V

Subwoofer component 上 件 方 式		
Function	normal Sub	smart AMP Sub
CR BD N SUB	V	
CR BD S SUB		V
CR BD SUB CON	V	V