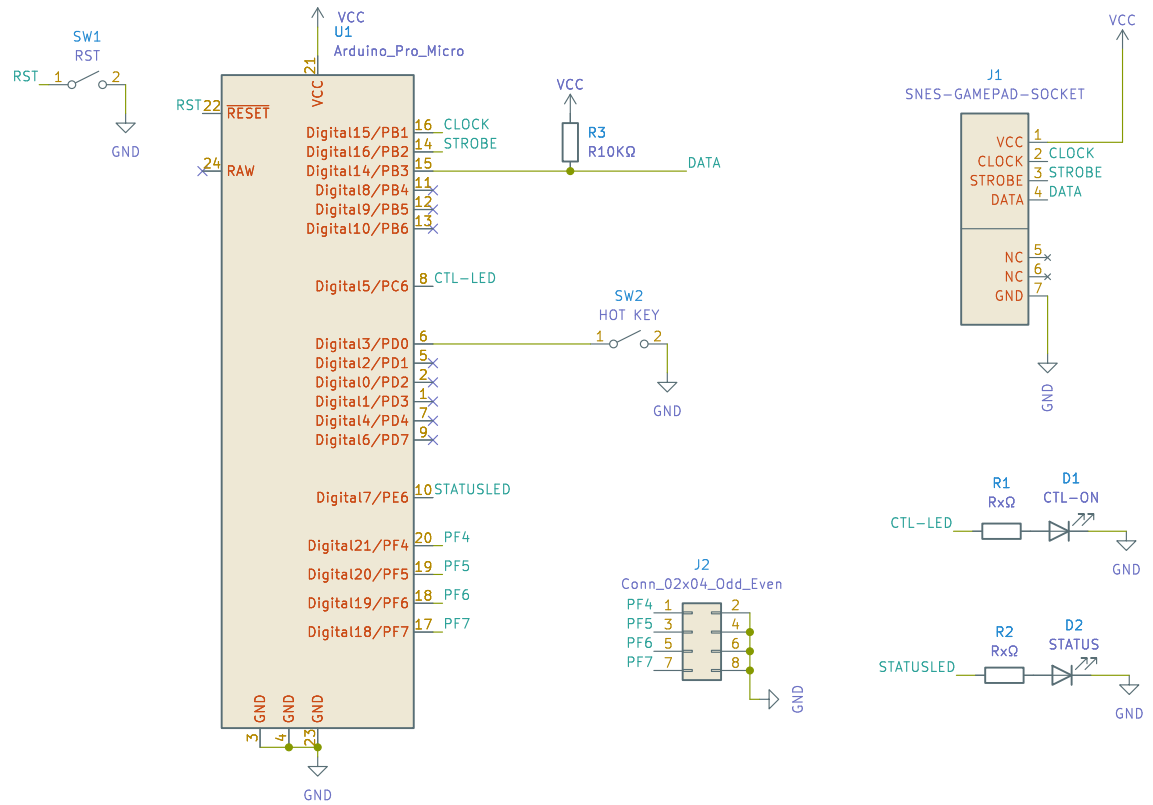

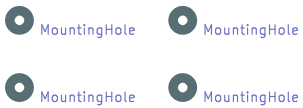

mistepien

Sheet: /

File: snespad2usb.kicad_sch

Title: snespad2usb

Size: A4	Date:	**Rev: 0.3**
KiCad E.D.A. 8.0.3		Id: 1/1