ZTU Module Datasheet

Version: 20240613

Online Version

Contents

1 Overview **2**
1.1 Features 2
1.2 Applications 2

2 Module interfaces **3**
2.1 Dimensions and package 3
2.2 Pin definition 4

3 Electrical parameters **8**
3.1 Absolute electrical parameters 8
3.2 Normal working conditions 8
3.3 TX and RX power consumption 9
3.4 Operating current 9

4 RF parameters **11**
4.1 Basic RF features 11
4.2 TX performance 11
4.3 RX performance 12

5 Requirements on power-on sequence **13**

6 Antenna **15**
6.1 Antenna type 15
6.2 Antenna interference reduction 15

7 Packaging information and production instructions **16**
7.1 Mechanical dimensions 16
7.2 Side view 18
7.3 Schematic diagram of footprint 19
7.4 Diagram of PCB footprint 19
7.5 Production instructions 20
7.6 Recommended oven temperature curve 22
7.7 Storage conditions 26

8 MOQ and packaging information **27**

9 Appendix: Statement **28**

ZTU is a Zigbee module that Tuya has developed. It consists of a highly integrated RF chip (Z2), and a few peripherals. ZTU is embedded with a low-power 32-bit CPU, 1024-KB flash , 64-KB RAM, and rich peripheral resources.

1 Overview

Based on ZTU, you can develop Zigbee products as required.

1.1 Features

- Embedded with a low-power 32-bit CPU processor
- The maximum clock rate: 48 MHz
- Wide operating voltage: 1.8 to 3.6 V (2.8V or higher is recommended)
- Peripherals: 15 general-purpose input/output (GPIO), 1 universal asynchronous receiver/transmitter (UART), and 2 analog-to-digital converters (ADC)
- Zigbee connectivity
  - Support 802.15.4 MAC/PHY
  - Working channels 11 to 26 @2.400 to 2.483 GHz, air interface rate: 250 Kbps
  - Up to +10dBm output power and dynamic output power>35 dB
  - Built-in onboard PCB antenna, Ipex connector reserved
  - Onboard PCB antenna with a gain of 1.08 dBi
  - Operating temperature: -40°C to 105°C
  - Support hardware encryption and AES 128

1.2 Applications

- Intelligent building
- Smart household and home appliances
- Smart socket and light
- Industrial wireless control
- Baby monitor
- Intelligent bus

2 Module interfaces

2.1 Dimensions and package

ZTU has 3 rows of pins with a 1.4±0.1 mm pin spacing.

The ZTU dimensions are 20.3±0.35 mm (L)×15.8±0.35 mm (W) ×3±0.15 mm (H).

The dimensions of ZTU are as follows:

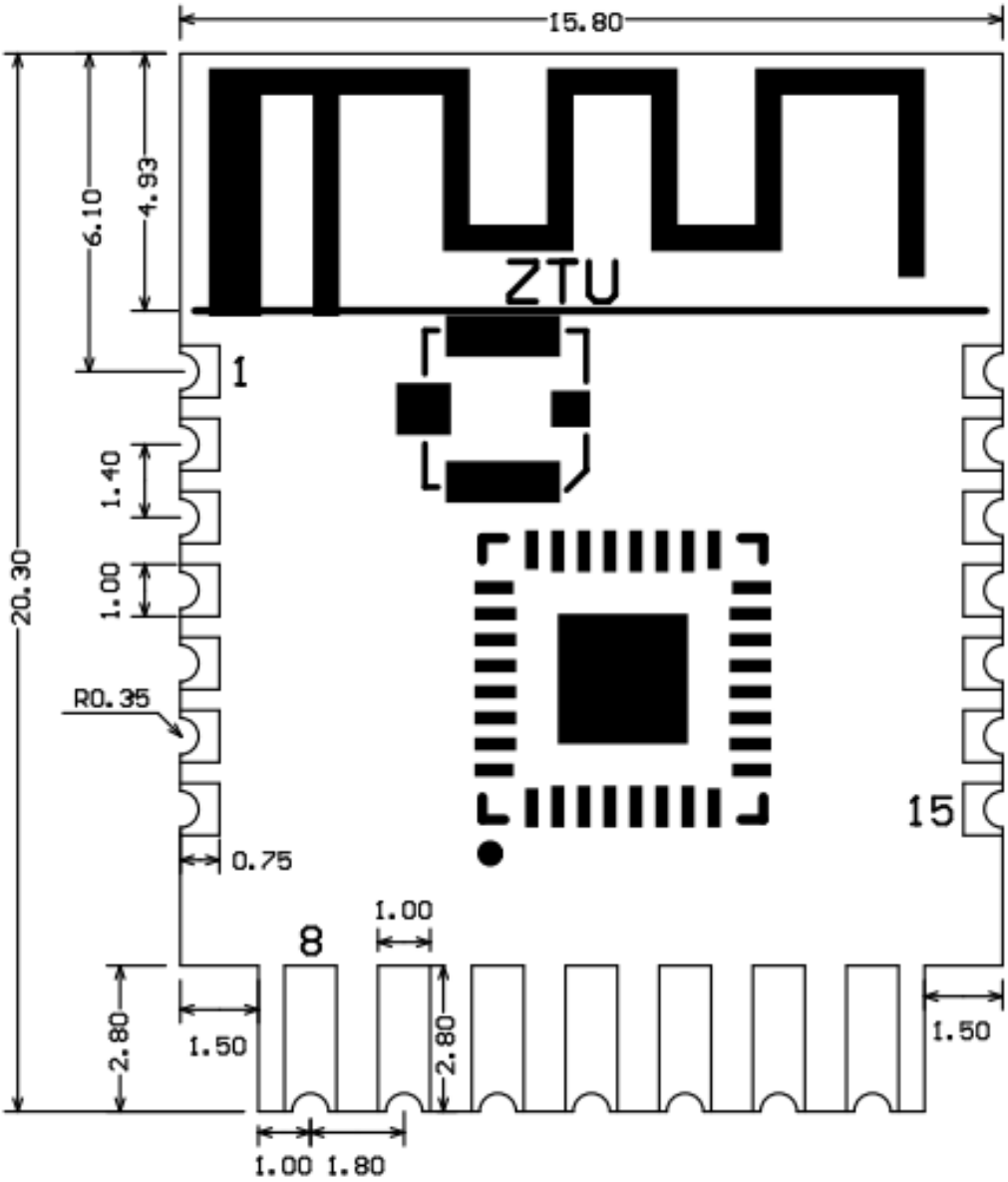

2.2 Pin definition

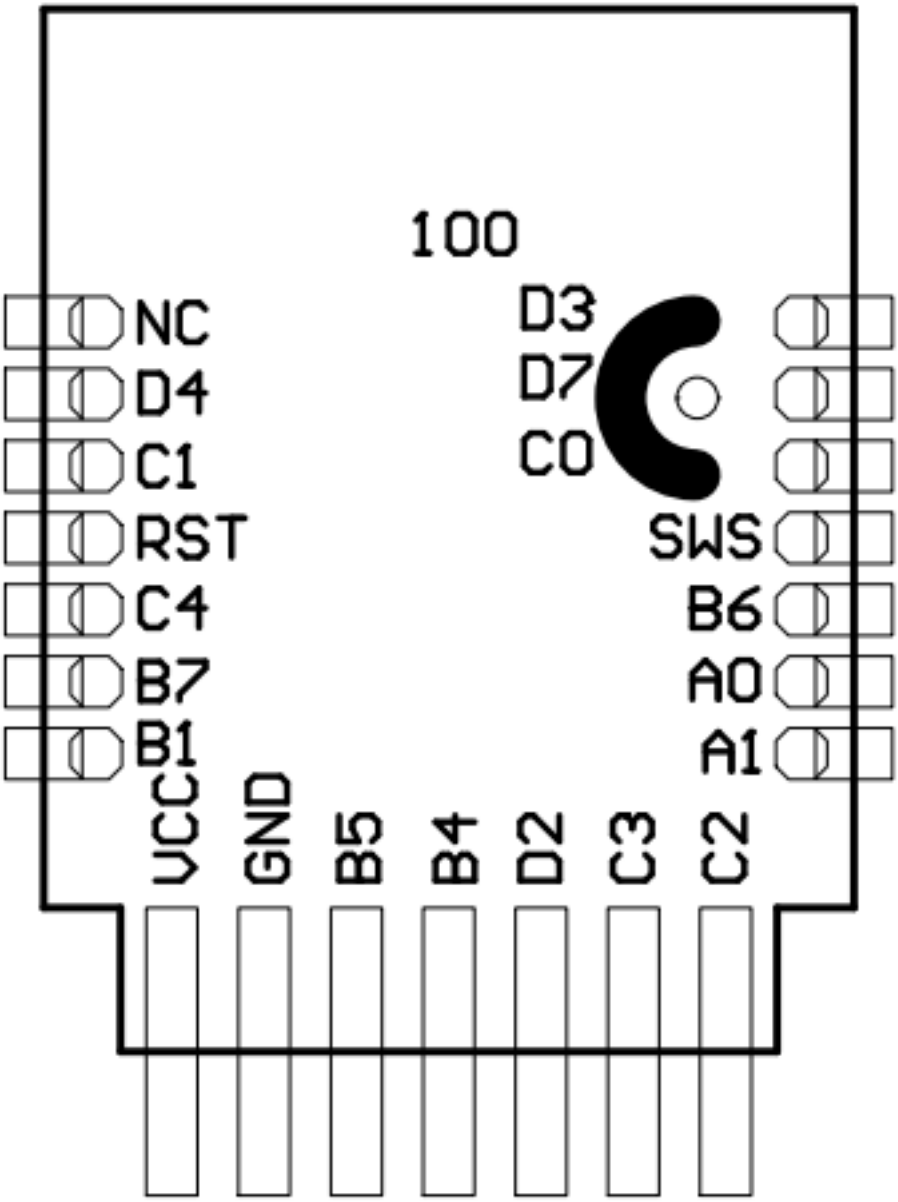

Pin number	Symbol	I/O type	Function
1	D3	I/O	Common I/O pin, which corresponds to D3 (Pin 32) of IC
2	D7	I/O	Common I/O pin, which corresponds to D7 (Pin 2) of IC
3	C0	I/O	Common I/O pin, which corresponds to C0 (Pin 20) of IC
4	SWS	I/O	Burning pin, which corresponds to SWS (Pin 5) of IC
5	B6	I/O	ADC pin, which corresponds to B6 (Pin 16) of IC
6	A0	I/O	Common I/O pin, which corresponds to A0 (Pin 3) of IC
7	A1	I/O	Common I/O pin, which corresponds to A1 (Pin 4) of IC
8	C2	I/O	Support hardware PWM and correspond to C2 (Pin 22) on the internal IC
9	C3	I/O	Support hardware PWM and correspond to C3 (Pin 23) on the internal IC

Pin number	Symbol	I/O type	Function
10	D2	I/O	Support hardware PWM and correspond to D2 (Pin 31) on the internal IC
11	B4	I/O	Support hardware PWM and correspond to B4 (Pin 14) on the internal IC
12	B5	I/O	Support hardware PWM and correspond to B5 (Pin 15) on the internal IC
13	GND	P	Power supply reference ground
14	VCC	P	Power supply pin (3.3V)
15	B1	I/O	Uart_TXD, which corresponds to B1 (Pin 6) of IC
16	B7	I/O	Uart_RXD, which corresponds to B7 (Pin 17) of IC
17	C4	I/O	ADC pin, which corresponds to C4 (Pin 16) of IC
18	RST	I/O	Reset pin, active low
19	C1	I/O	Common I/O pin, which corresponds to C1 (Pin 21) of IC

Pin number	Symbol	I/O type	Function
20	D4	I/O	Common I/O pin, which corresponds to D4 (Pin 1) of IC
21	NC	I/O	No connection

> P indicates a power supply pin and I/O indicates an input/output pin.

3 Electrical parameters

3.1 Absolute electrical parameters

Parameter	Description	Minimum value	Maximum value	Unit
Ta	Operating temperature	-40	105	°C
VBAT	Power supply voltage	1.8 (2.8V or higher is recommended)	3.6	V
ESD voltage (human body model)	TAMB-25°C	-	2	KV
ESD voltage (machine model)	TAMB-25°C	-	0.5	KV

3.2 Normal working conditions

Parameter	Description	Minimum value	Typical value	Maximum value	Unit
Ta	Operating temperature	-40	-	105	°C
VCC	Operating voltage	1.8 (2.8V or higher is recommended)	3.3	3.6	V
Pin Driver strength	I	-	4	-	mA

Parameter	Description	Minimum value	Typical value	Maximum value	Unit
VIL	I/O low-level input	-	-	VDD*0.3	V
VIH	I/O high-level input	VDD*0.7	-	-	V
VOL	I/O low-level output	-	-	VDD*0.2	V
VOH	I/O high-level output	VDD*0.8	-	-	V

3.3 TX and RX power consumption

Working status	Mode	Rate	Transmit power/receive	Average value	Peak value (Typical value)	Unit
Transmit	-	250Kbps	+0 dBm	4.64	23	mA
Transmit	-	250Kbps	+10 dBm	8.9	39	mA
Receive	-	250Kbps	Constantly receive	6.9	7	mA

3.4 Operating current

Working mode	Working status, Ta = 25°C	Average value	Maximum value (Typical value)	Unit
Quick network connection state	The module is in the fast network connection state	9.5	13.5	mA
Network connection state	The module is connected to the network	8.9	10.5	mA
Deep sleep mode	Deep sleep mode, reserve 32-KB SRAM	2.8	-	μA

4 RF parameters

4.1 Basic RF features

Parameter	Description
Working frequency	2.405 to 2.480 GHz
Zigbee standard	IEEE 802.15.4
Data transmission rate	250 Kbps
Antenna type	PCB antenna with a gain of 1.08 dBi, IPEX optional

4.2 TX performance

TX performance

Parameter	Minimum value	Typical value	Maximum value	Unit
Maximum output power (250 Kbps)	-	10	-	dBm
Minimum output power (250 Kbps)	-	-25	-	dBm
Output power adjustment stepping	-	0.5	1	dBm
Output spectrum adjacent channel suppression	-	-31	-	dBc
Frequency error	-10	-	10	ppm

4.3 RX performance

RX sensitivity:

Parameter	Minimum value	Typical value	Maximum value	Unit
PER<8%, RX sensitivity (250 Kbps)	-102	-101	-99	dBm

5 Requirements on power-on sequence

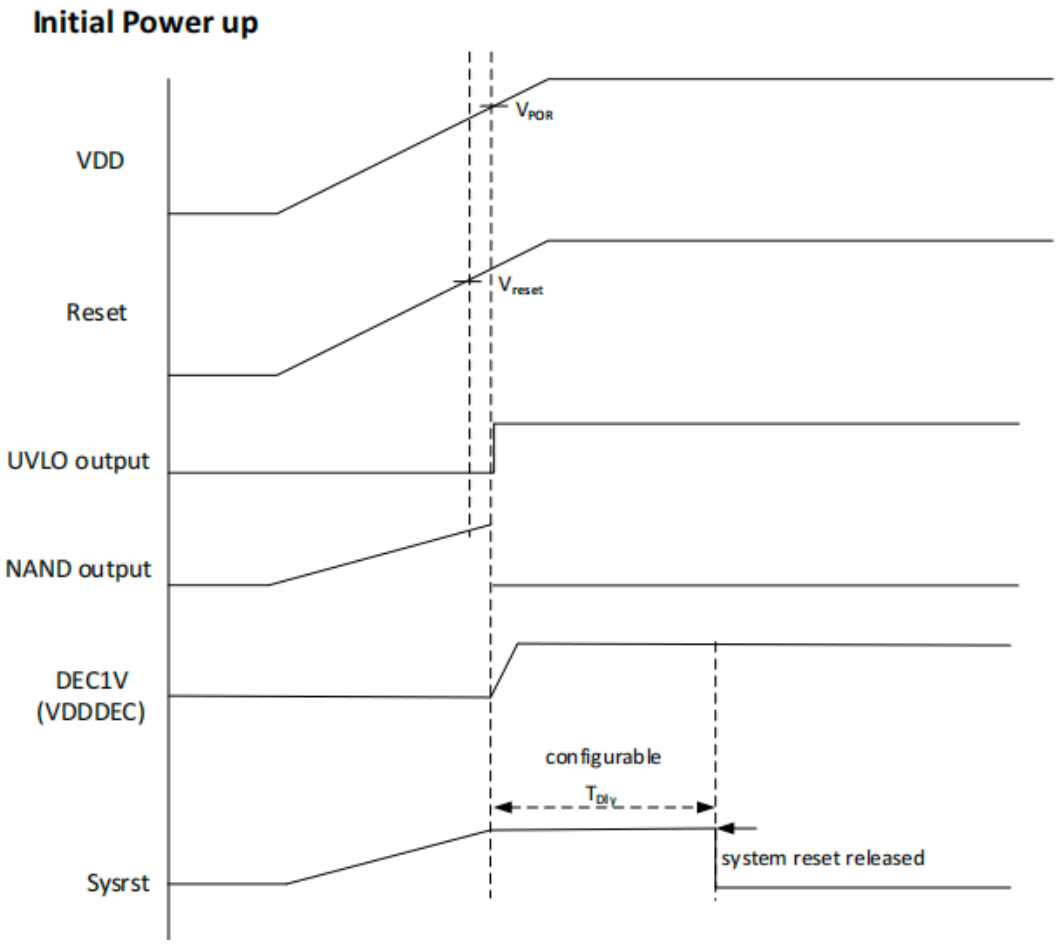

Symbol	Parameter	Min.	Typ.	Max.	Unit
V_{POR}	VDD voltage when V_{UVLO} turns to high level		1.62		V
V_{Pdn}	VDD voltage when V_{UVLO} turns to low level		1.55		V
Supply rise time (from 1.6V to 1.8V)	t_R			10	ms

The Z2 chip has requirements on the power-on sequence. During the power-on process, the system starts when the RST pin reaches 1.62V. At this time, the VCC

needs to reach more than 1.8V within 10ms. Because the RST pin has the RC link, the VCC of the bare module is much more than 1.8V when the RST reaches 1.62V.

In some cases that the large capacitance in the power driver connected to the Z2 chip module charges or discharges, if the module voltage is not fully discharged below 0.6V, the module will probably crash when it is restarted. It is required that the power supply pin VCC_3.3V of the module needs to be connected with a dummy load of 1K to release power quickly. You can refer to the following figure which shows parts of power-driven links.

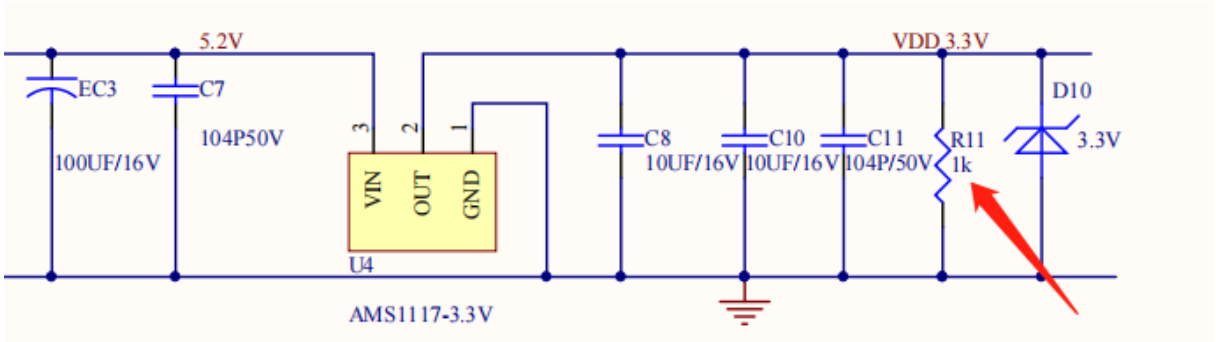

6 Antenna

6.1 Antenna type

ZTU uses only the onboard PCB antenna. The ZTU-IPEX module can use the IPEX antenna.

6.2 Antenna interference reduction

To ensure the optimal Zigbee performance when the Zigbee module uses an onboard PCB antenna, it is recommended that the antenna be at least 15 mm away from other metal parts.

To prevent an adverse impact on the antenna radiation performance, avoid copper or traces along the antenna area on the PCB.

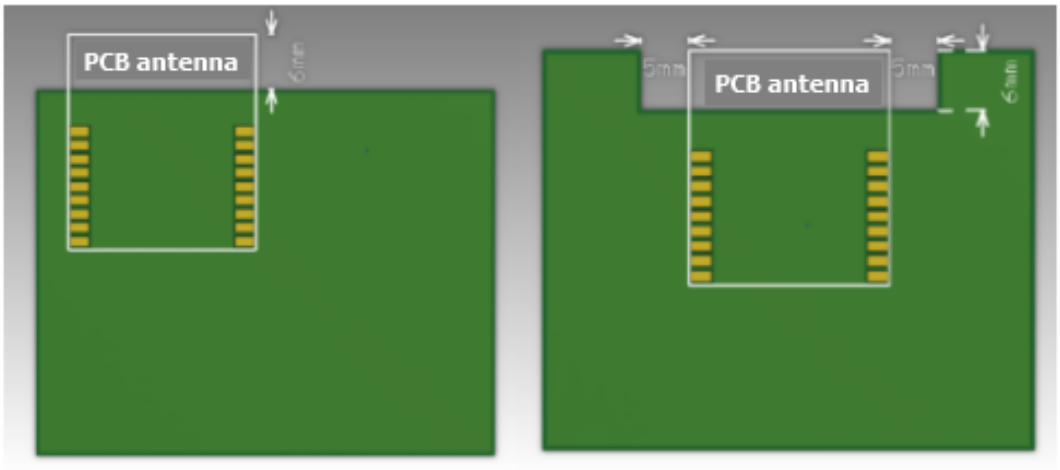

7 Packaging information and production instructions

7.1 Mechanical dimensions

The PCB dimensions are 20.3±0.35 mm (L)×15.8±0.35 mm (W) ×1±0.1 mm (H).

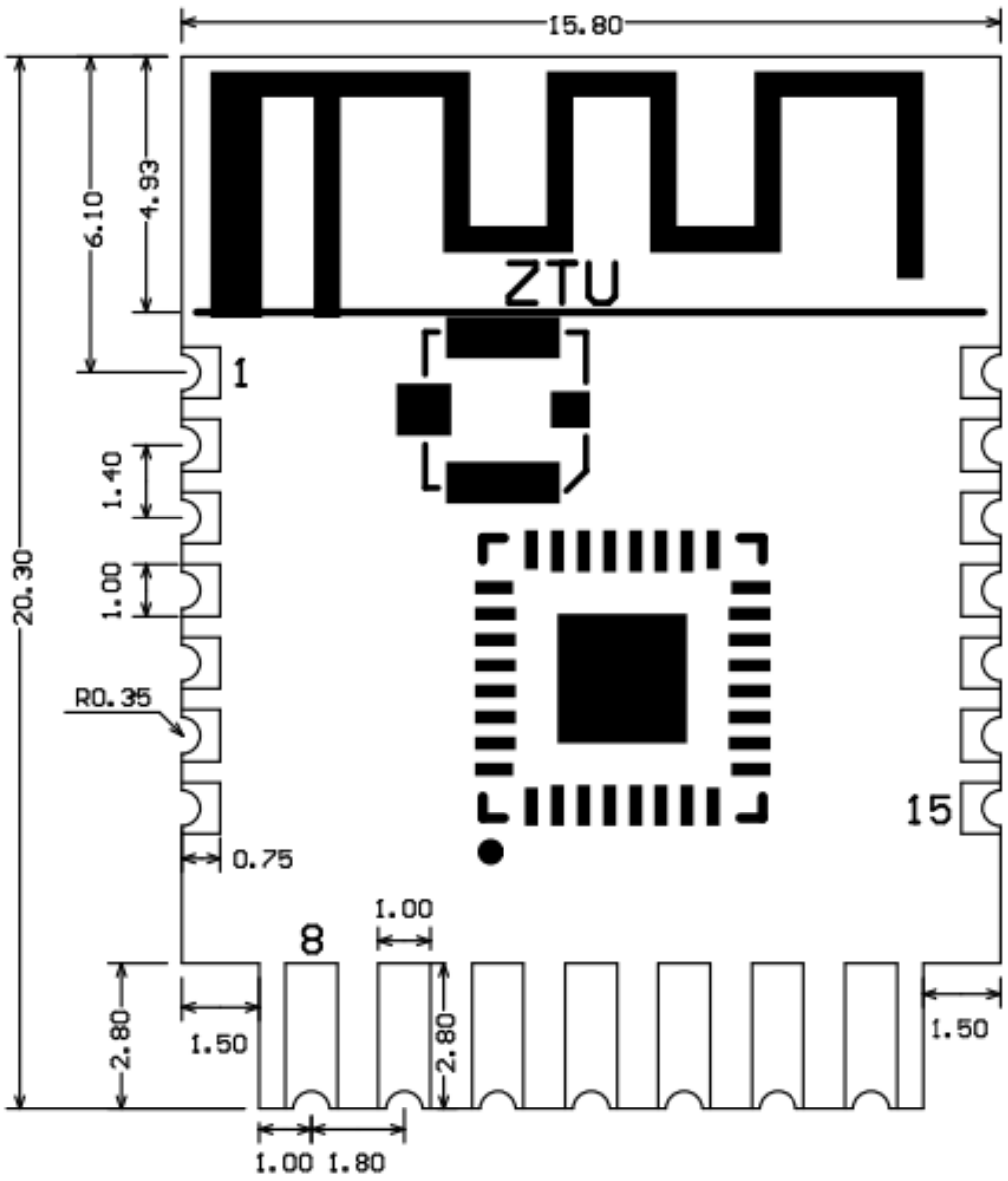

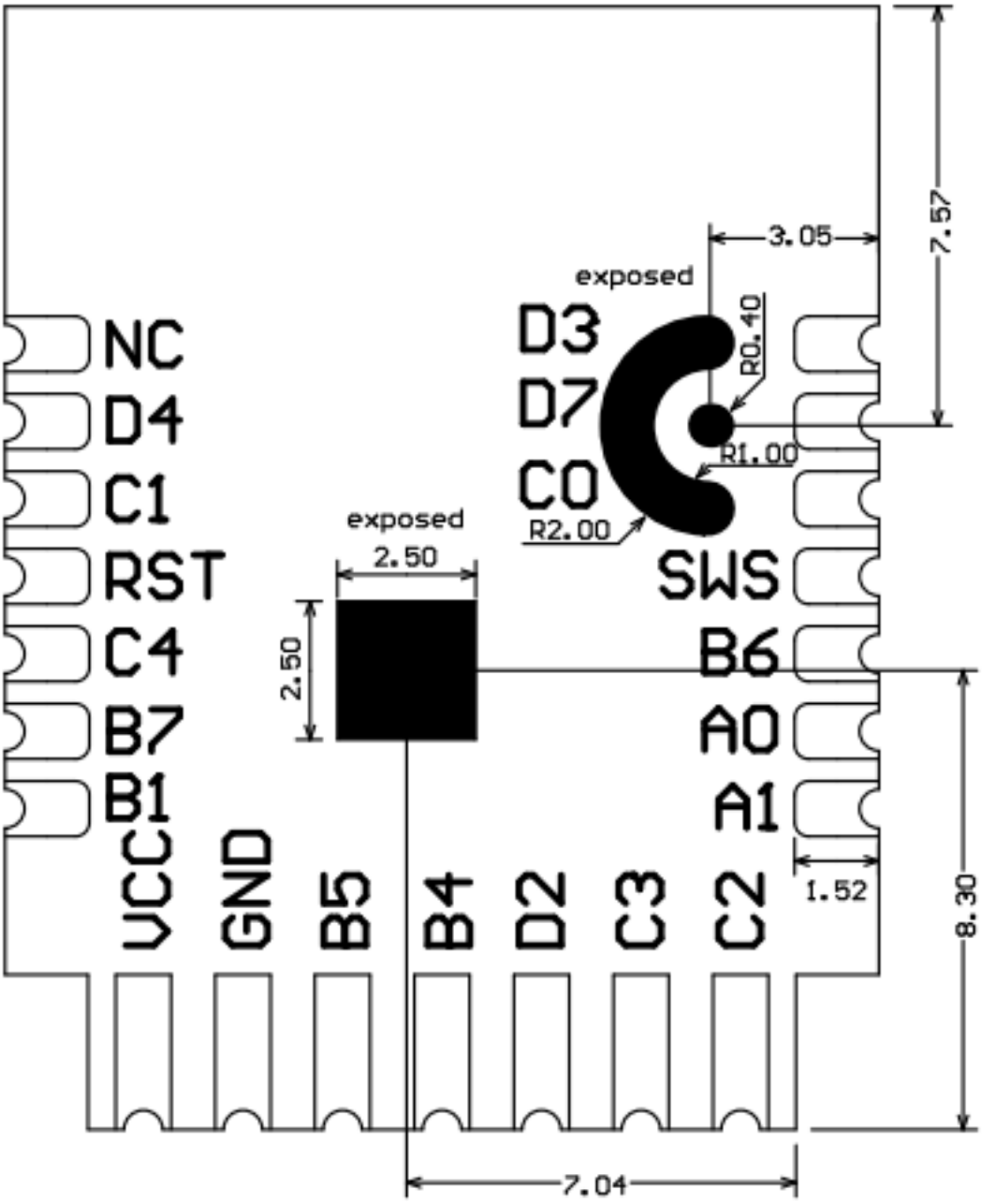
NC
D4
C1
RST
C4
B7
B1
VCC
GND
B5
B4
D2
C3
C2
A1
A0
B6
SWS
C0
D7
D3
exposed
exposed
3.05
7.57
R0.40
R1.00
R2.00
2.50
2.50
1.52
8.30
7.04

Bottom View

7.2 Side view

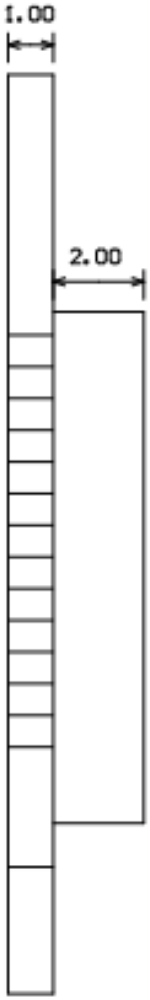

Unit: mm

Module form factor tolerance: ± 0.3mm

Plate thickness tolerance: ±0.1mm

Shield cover height tolerance: ±0.05mm

7.3 Schematic diagram of footprint

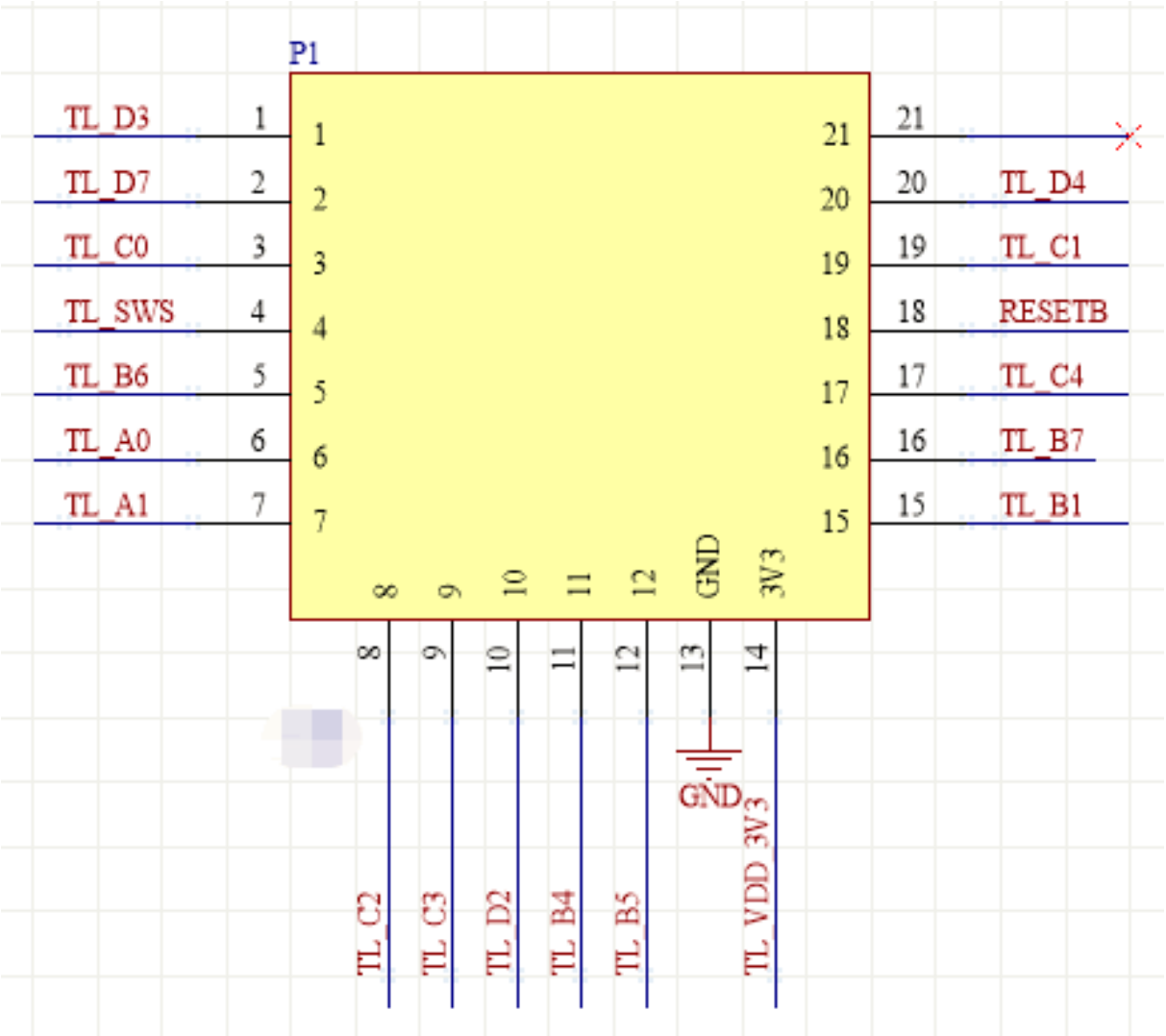

7.4 Diagram of PCB footprint

Diagram of PCB footprint-SMT:

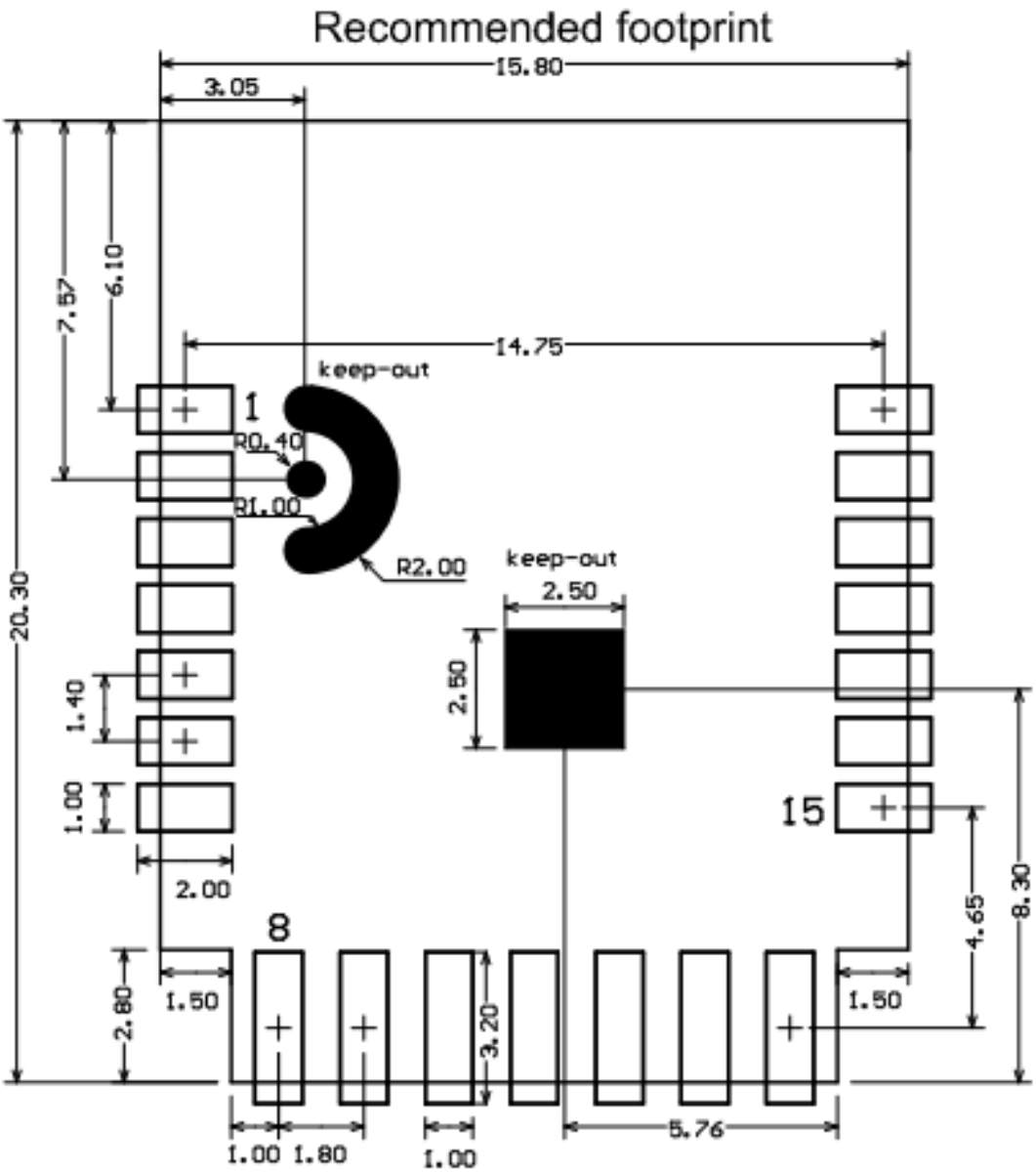

7.5 Production instructions

1. For the modules that can be packaged with the SMT or in an in-line way, you can select either of them according to the PCB design solutions of customers. If a PCB is designed to be SMT-packaged, package the module with the SMT. If a PCB is designed to be in-line-packaged, package the module in an in-line way. After

being unpacked, the module must be soldered within 24 hours. Otherwise, it needs to be put into the drying cupboard where the relative humidity is not greater than 10%; or it needs to be packaged again under vacuum and the exposure time needs to be recorded (the total exposure time cannot exceed 168 hours).

- (SMT process) SMT devices:
  - Mounter
  - SPI
  - Reflow soldering machine
  - Thermal profiler
  - Automated optical inspection (AOI) equipment
- (Wave soldering process) Wave soldering devices
  - Wave soldering equipment
  - Wave soldering fixture
  - Constant-temperature soldering iron
  - Tin bar, tin wire, and flux
  - Thermal profiler
- Baking devices:
  - Cabinet oven
  - Anti-electrostatic and heat-resistant trays
  - Anti-electrostatic and heat-resistant gloves

2. Storage conditions for a delivered module:
   - The moisture-proof bag must be placed in an environment where the temperature is below 40°C and the relative humidity is lower than 90%.
   - The shelf life of a dry-packaged product is 12 months from the date when the product is packaged and sealed.
   - There is a humidity indicator card (HIC) in the packaging bag.

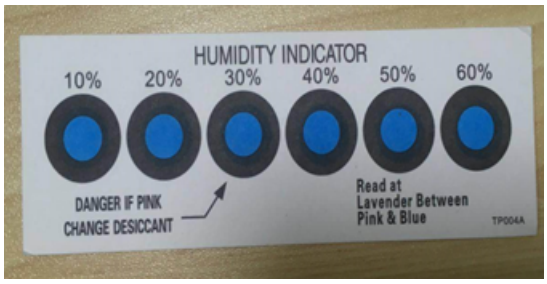

Figure 1: HIC-SMT and in-line module.png

3. The module needs to be baked in the following cases:
   - The packaging bag is damaged before unpacking.
   - There is no humidity indicator card (HIC) in the packaging bag.
   - After unpacking, circles of 10% and above on the HIC become pink.
   - The total exposure time has lasted for over 168 hours since unpacking.
   - More than 12 months have passed since the sealing of the bag.
4. Baking settings:
   - Temperature: 40°C and ≤ 5% RH for reel package and 125°C and ≤5% RH for tray package (please use the heat-resistant tray rather than a plastic container)
   - Time: 168 hours for reel package and 12 hours for tray package
   - Alarm temperature: 50°C for reel package and 135°C for tray package
   - Production-ready temperature after natural cooling: < 36°C
   - Re-baking situation: If a module remains unused for over 168 hours after being baked, it needs to be baked again.
   - If a batch of modules is not baked within 168 hours, do not use the wave soldering to solder them. Because these modules are Level-3 moisture-sensitive devices, they are very likely to get damp when exposed beyond the allowable time. In this case, if they are soldered at high temperatures, it may result in device failure or poor soldering.
5. In the whole production process, take electrostatic discharge (ESD) protective measures.
6. To guarantee the passing rate, it is recommended that you use the SPI and AOI to monitor the quality of solder paste printing and mounting.

7.6 Recommended oven temperature curve

Select a proper soldering manner according to the process. For the SMT process, please refer to the recommended oven temperature curve of reflow soldering. For the wave soldering process, please refer to the recommended oven temperature curve of wave soldering. There are some differences between the set temperatures and the actual temperatures. All the temperatures shown in this module datasheet are obtained through actual measurements.

Manner 1: SMT process (Recommended oven temperature curve of reflow soldering)

Set oven temperatures according to the following curve.

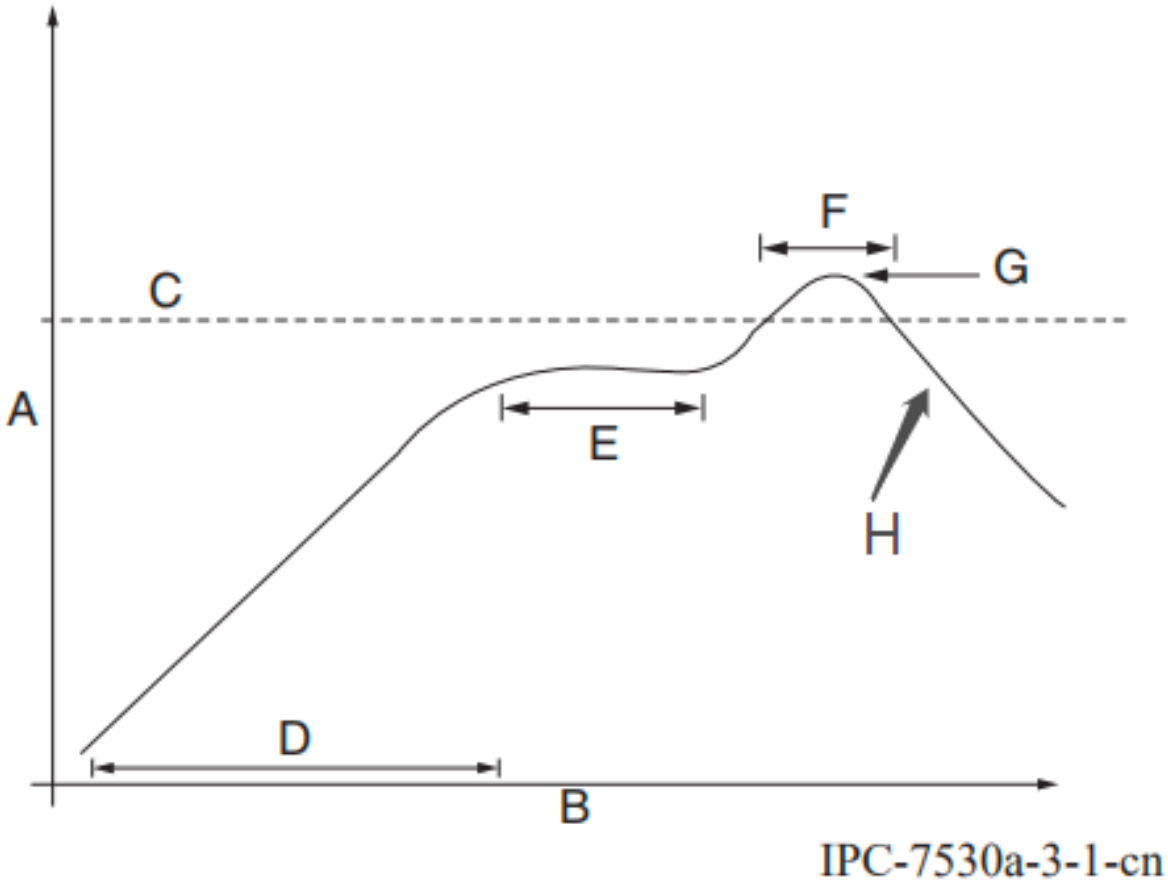

- A: Temperature axis
- B: Time axis
- C: Liquidus temperature: 217 to 220°C
- D: Ramp-up slope: 1 to 3°C/s
- E: Duration of constant temperature: 60 to 120s; the range of constant temperature: 150 to 200°C
- F: Duration above the liquidus: 50 to 70s
- G: Peak temperature: 235 to 245°C
- H: Ramp-down slope: 1 to 4°C/s

The above curve is just an example of the solder paste SAC305. For more

details about other solder pastes, please refer to Recommended oven temperature curve in the solder paste specifications.

Manner 2: Wave soldering process (Oven temperature curve of wave soldering)

Set oven temperatures according to the following temperature curve of wave soldering. The peak temperature is 260°C±5°C.

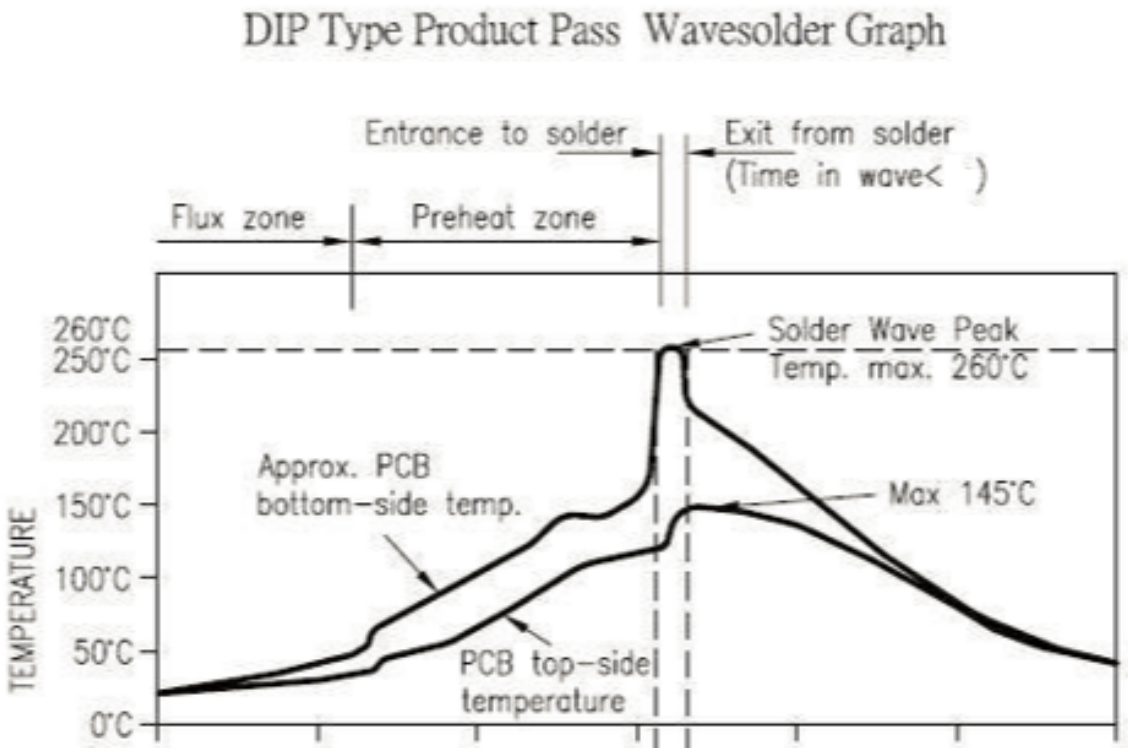

Suggestions on oven temperature curve of wave soldering		Suggestions on manual soldering temperature	
Preheat temperature	80 to 130 °C	Soldering temperature	360±20°C
Preheat time	75 to 100s	Soldering time	< 3s/point
Peak contact time	3 to 5s	NA	NA

Suggestions on oven temperature curve of wave soldering		Suggestions on manual soldering temperature	
Temperature of tin cylinder	260±5°C	NA	NA
Ramp-up slope	≤2°C/s	NA	NA
Ramp-down slope	≤6°C/s	NA	NA

7.7 Storage conditions

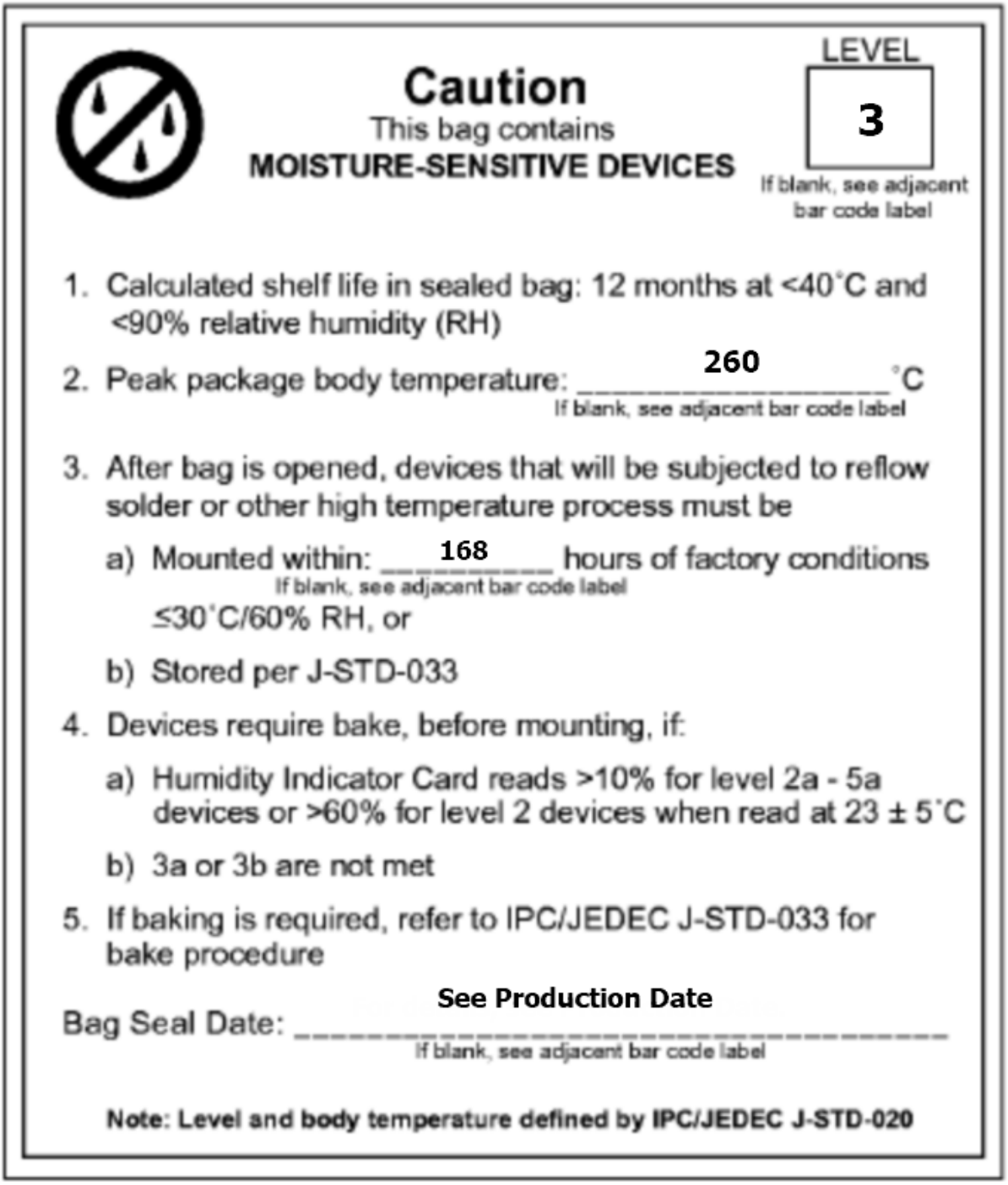

Caution

This bag contains

MOISTURE-SENSITIVE DEVICES

LEVEL

3

If blank, see adjacent bar code label

1. Calculated shelf life in sealed bag: 12 months at <40˚C and <90% relative humidity (RH)
2. Peak package body temperature: **260** ˚C
   If blank, see adjacent bar code label
3. After bag is opened, devices that will be subjected to reflow solder or other high temperature process must be
   a) Mounted within: **168** hours of factory conditions
   If blank, see adjacent bar code label
   ≤30˚C/60% RH, or
   b) Stored per J-STD-033
4. Devices require bake, before mounting, if:
   a) Humidity Indicator Card reads >10% for level 2a - 5a devices or >60% for level 2 devices when read at 23 ± 5˚C
   b) 3a or 3b are not met
5. If baking is required, refer to IPC/JEDEC J-STD-033 for bake procedure

Bag Seal Date: **See Production Date**
If blank, see adjacent bar code label

Note: Level and body temperature defined by IPC/JEDEC J-STD-020

8 MOQ and packaging information

Product model	MOQ (pcs)	Shipping packaging method	The number of modules per reel	The number of reels per carton
ZTU	4400	Tape reel	1100	4

9 Appendix: Statement

FCC Caution: Any changes or modifications not expressly approved by the party responsible for compliance could void the user' s authority to operate this device.

This device complies with Part 15 of the FCC Rules. Operation is subject to the following two conditions: (1) This device may not cause harmful interference, and (2) this device must accept any interference received, including interference that may cause undesired operation.

Note: This device has been tested and found to comply with the limits for a Class B digital device, according to part 15 of the FCC Rules. These limits are designed to provide reasonable protection against harmful interference in a residential installation. This device generates, uses, and can radiate radio frequency energy and, if not installed and used following the instructions, may cause harmful interference to radio communications. However, there is no guarantee that interference will not occur in a particular installation.

If this device does cause harmful interference to radio or television reception, which can be determined by turning the device off and on, the user is encouraged to try to correct the interference by one or more of the following measures:

- Reorient or relocate the receiving antenna.
- Increase the separation between the device and receiver.
- Connect the device into an outlet on a circuit different from that to which the receiver is connected.
- Consult the dealer or an experienced radio/TV technician for help.

Radiation Exposure Statement

This device complies with FCC radiation exposure limits set forth for an uncontrolled rolled environment. This device should be installed and operated with a minimum distance of 20cm between the radiator and your body.

Important Note

This radio module must not be installed to co-locate and operating simultaneously with other radios in the host system except following FCC multi-transmitter product procedures. Additional testing and device authorization may be required to operate simultaneously with other radios.

The availability of some specific channels and/or operational frequency bands are country-dependent and are firmware programmed at the factory to match the intended destination. The firmware setting is not accessible by the end-user.

The host product manufacturer is responsible for compliance with any other FCC rules that apply to the host not covered by the modular transmitter grant of certification. The final host product still requires Part 15 Subpart B compliance testing with the modular transmitter installed.

The end-user manual shall include all required regulatory information/warnings as shown in this manual, including "This product must be installed and operated with a minimum distance of 20 cm between the radiator and user body".

This device has got an FCC ID: 2ANDL-ZTU. The end product must be labelled in a visible area with the following: "Contains Transmitter Module FCC ID: 2ANDL-ZTU".

This device is intended only for OEM integrators under the following conditions:

The antenna must be installed such that 20cm is maintained between the antenna and users, and the transmitter module may not be co-located with any other transmitter or antenna.

As long as the 2 conditions above are met, further transmitter tests will not be required. However, the OEM integrator is still responsible for testing their end-product for any additional compliance requirements required with this module installed.

Declaration of Conformity European Notice

Hereby, Hangzhou Tuya Information Technology Co., Ltd declares that this module product is in compliance with essential requirements and other relevant provisions of Directive 2014/53/EU,2011/65/EU. A copy of the Declaration of conformity can be found at https://www.tuya.com.

This product must not be disposed of as normal household waste, in accordance with the EU directive for waste electrical and electronic equipment (WEEE-2012/19/EU). Instead, it should be disposed of by returning it to the point of sale, or to a municipal recycling collection point.

The device could be used with a separation distance of 20cm to the human body.