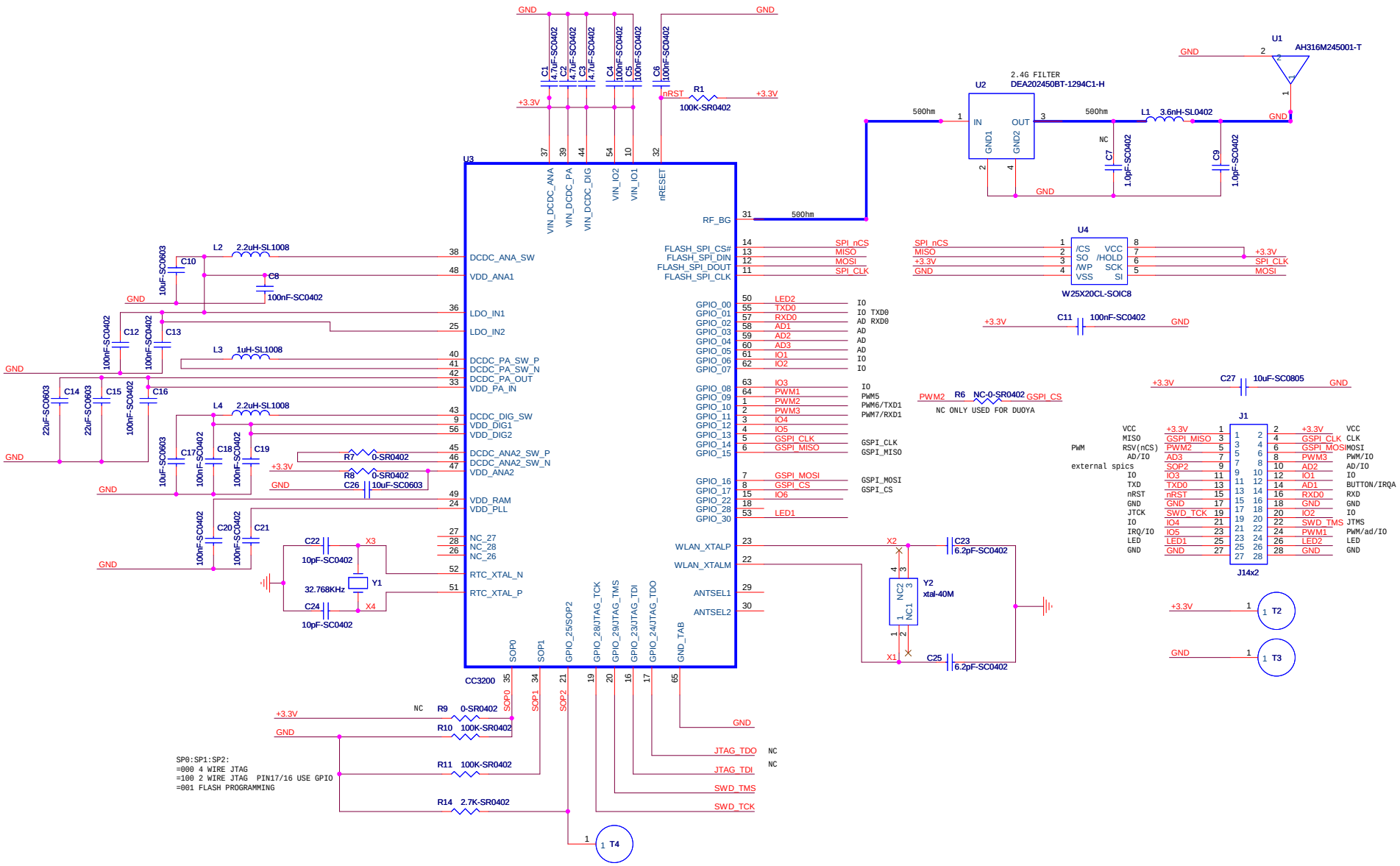

Title	<Title>
Size A3	Document Number <Doc>
Rev	
Date: Sunday, September 14, 2014	Sheet 1 of 1