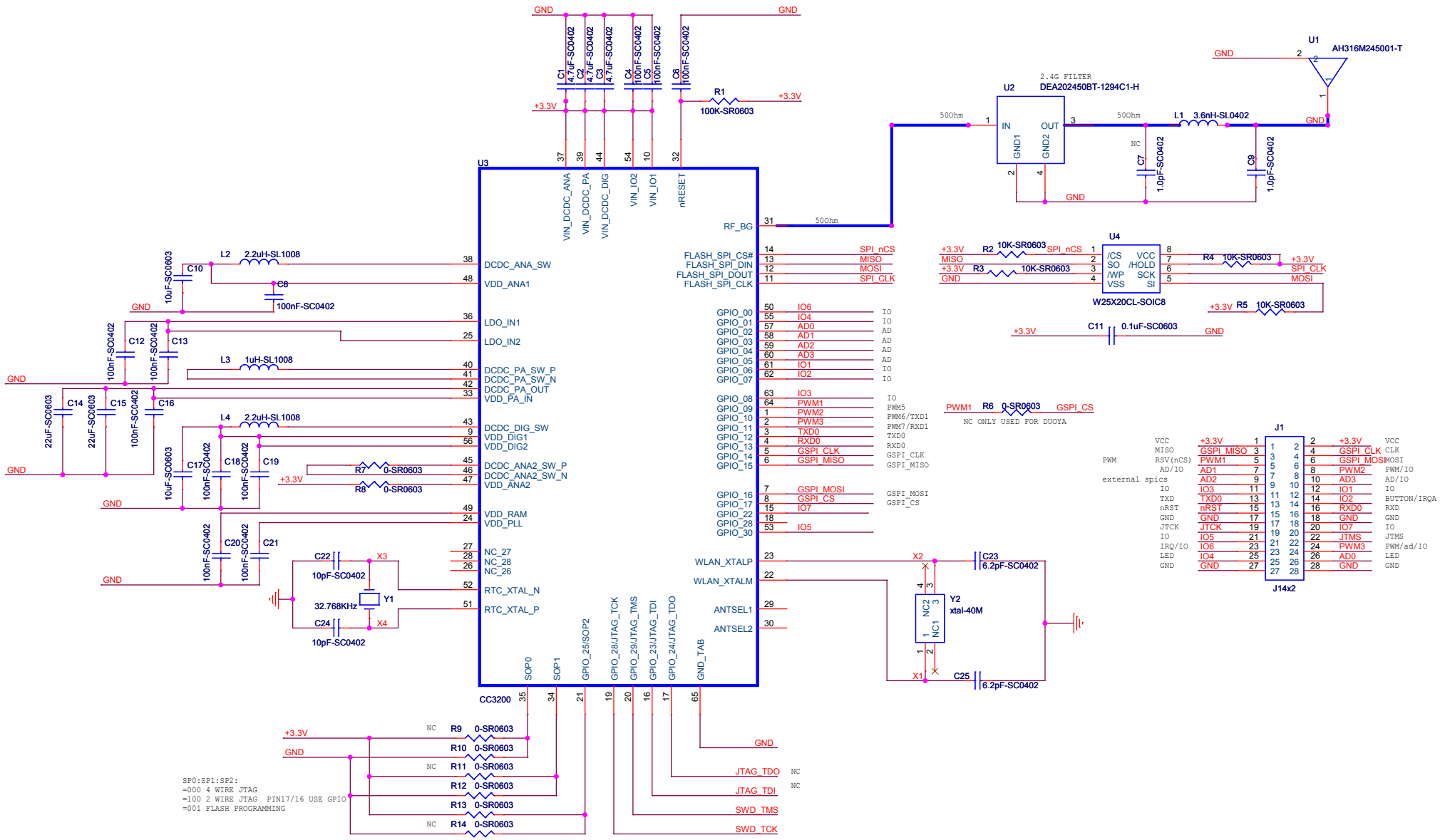

Title	<Title>
Size A3	Document Number <Doc>
Rev	
Date: Sunday, August 24, 2014	Sheet 1 of 1