REVISIONS				
ZONE	REV	DESCRIPTION	DATE	APPROVED

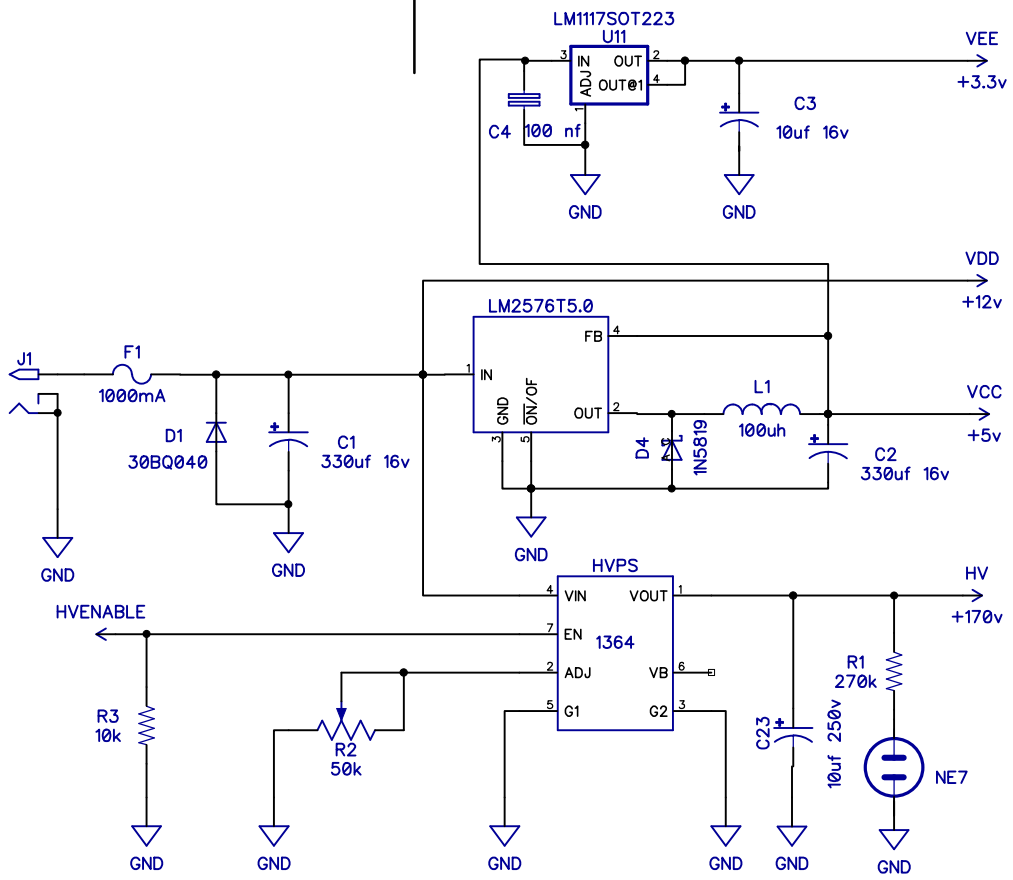

Zev-1-8 Nixie Clock

Power Supply

REV 8

SCALE

Power Supply