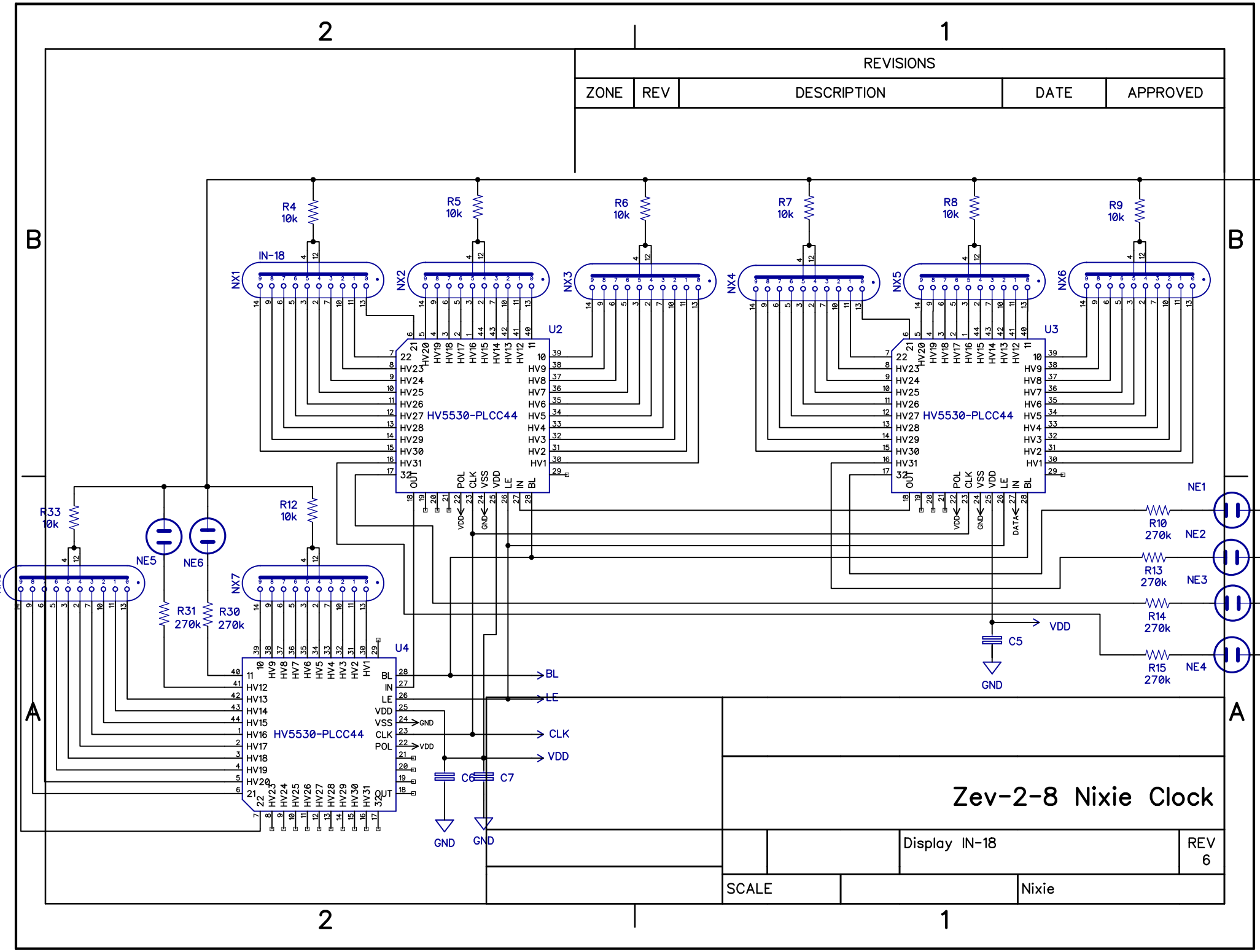
REVISIONS
ZONE
REV
DESCRIPTION
DATE
APPROVED
R4 10k
R5 10k
R6 10k
R7 10k
R8 10k
R9 10k
R33 10k
R12 10k
IN-18
NX1
NX2
NX3
NX4
NX5
NX6
NX7
NX8
U2
U3
U4
HV5530-PLCC44
NE1
NE2
NE3
NE4
NE5
NE6
R10 270k
R13 270k
R14 270k
R15 270k
R31 270k
R30 270k
C5
C6
C7
VDD
GND
BL
LE
CLK
Zev-2-8 Nixie Clock
Display IN-18
REV 6
SCALE
Nixie