Diode I vs. V curves

Objective:

The purpose of this activity is to investigate the current vs. voltage characteristics of a PN junction diode.

Materials:

ADALM2000 Active Learning Module
Solder-less Breadboard
1 - Resistor (1KΩ or any similar value from 1KΩ to 5KΩ)
1 - small signal diode (1N914 or similar)

Directions:

The current vs. voltage characteristics of the PN junction diode can be measured using the ADALM2000 Board and the following connections. The green boxes indicate where to connect the ADALM2000 board. Set up the breadboard with waveform generator output, W1, attached to one end of the resistor. The 2+ scope input is also connected here. The other end of the resistor is connected to one end of the diode as shown in the first diagram. The 2- scope input as well as the 1+ scope input is also connected to the second end of the resistor. The other end of the diode is connected to ground along with the 1- scope input.

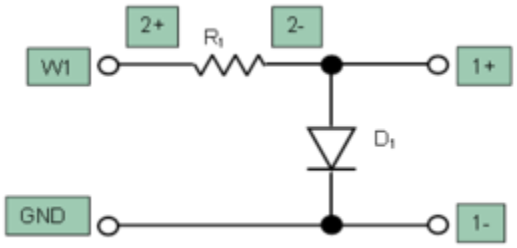

Figure 1. Connection diagram for diode I/V curves

Hardware Setup:

The waveform generator should be configured for a 100 Hz triangle wave with 6 volt amplitude peak-to-peak and 0 volt offset. The differential input of scope channel 2 (2+,2-) is used to measure the current in the resistor (and diode). The Single ended input of scope channel 1 (1+) is used to measure the voltage across the diode (1- input can be grounded). The Scope should be setup with channel 1 at 500mV per division and channel 2 set also at 500mV per division. The current flowing through the diode, I_D, is the voltage measured by channel 2 divided by the resistor value (1KΩ in this example). Use the XY display mode to plot the voltage across the diode (scope channel 1) on the X axis vs. the current in the diode (scope channel 2) on the Y axis.

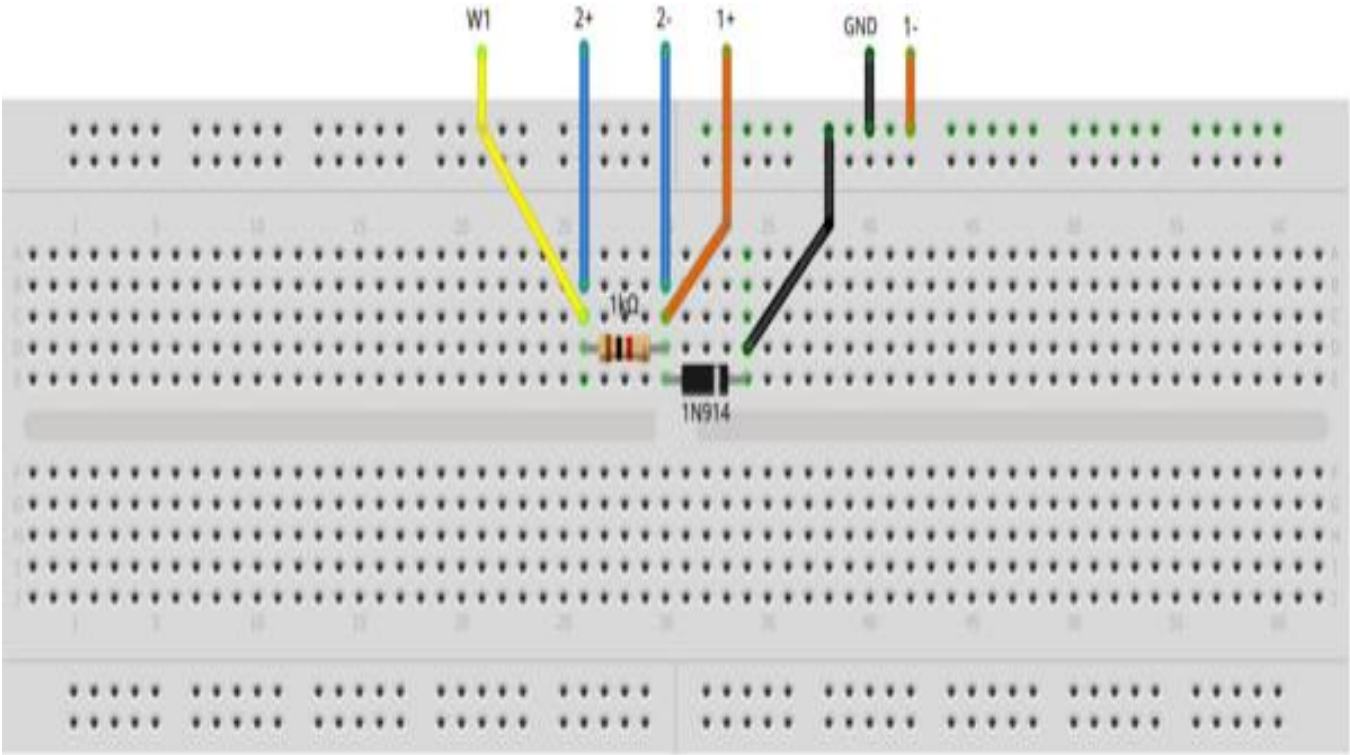

Figure 2. Current vs. Voltage, linear scales Bread board circuit.

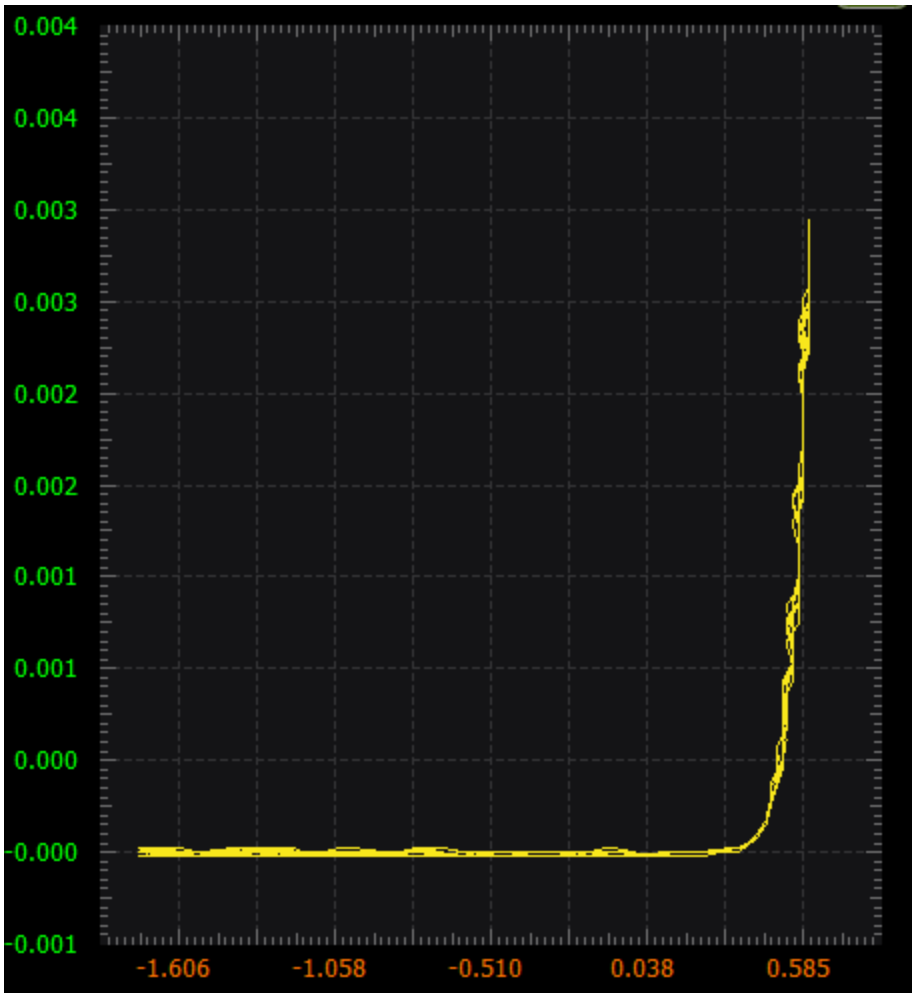

Figure 3. Current vs. Voltage, linear scales Scopy plot

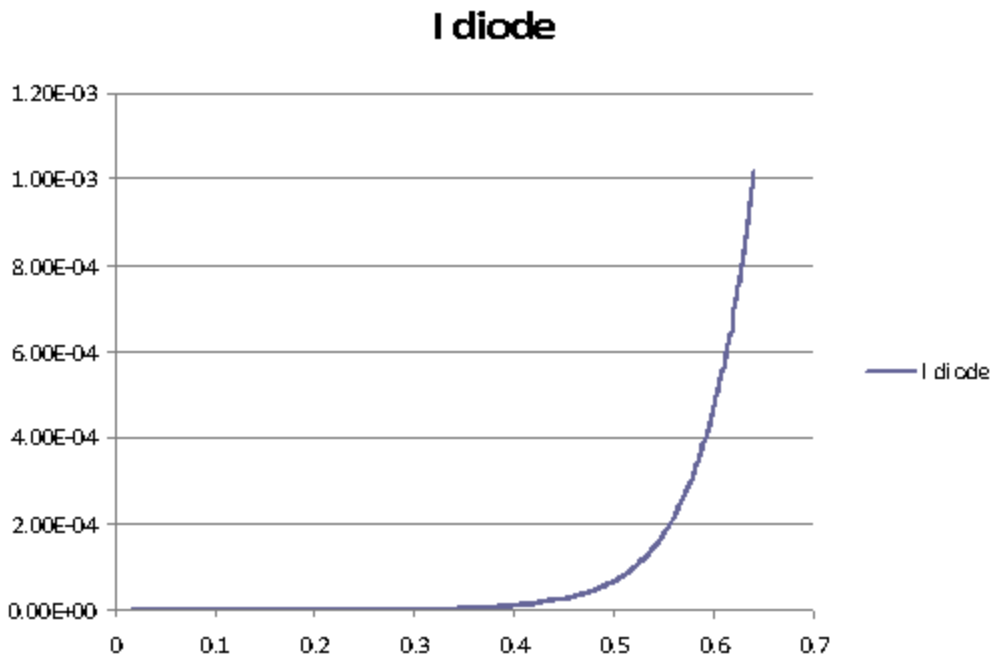

Figure 4. Current vs. Voltage, linear scales Excel plot

Load the captured data into spreadsheet program like Excel and calculate the diode current I_D. Plot the current vs. the voltage across the diode. The diode voltage, current relationship is logarithmic. If plotted on log scale the line should be straight as seen in the second plot.

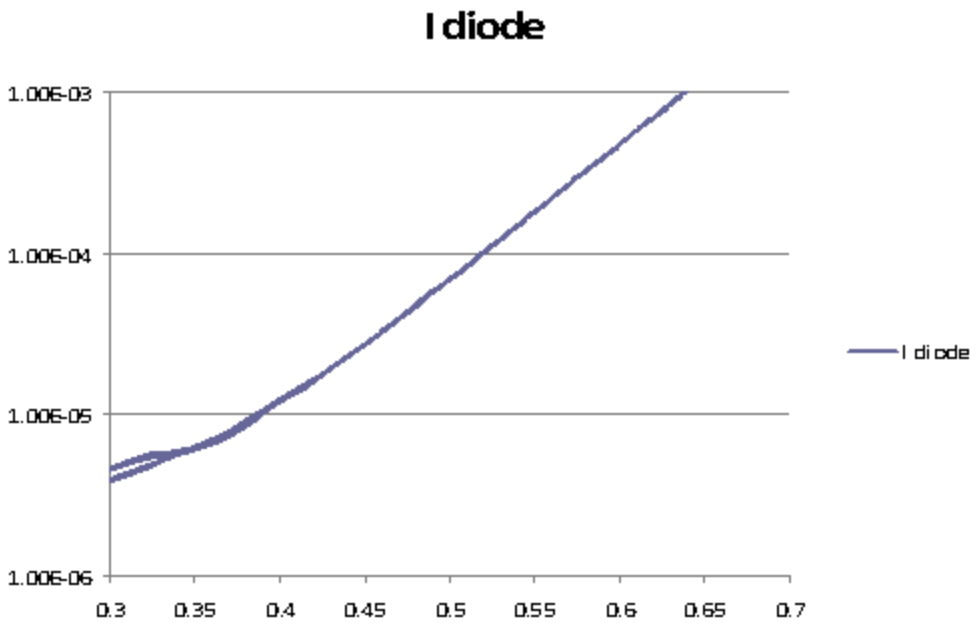

Figure 5. Current vs. Voltage on log scale

Procedure:

Run signal generator and XY plot to get output like this

CH – 1 X-axis voltage across diode

CH – 2 Y-axis current through diode (Voltage across the resistor)

Diode IV Charecteristics

Signal generator

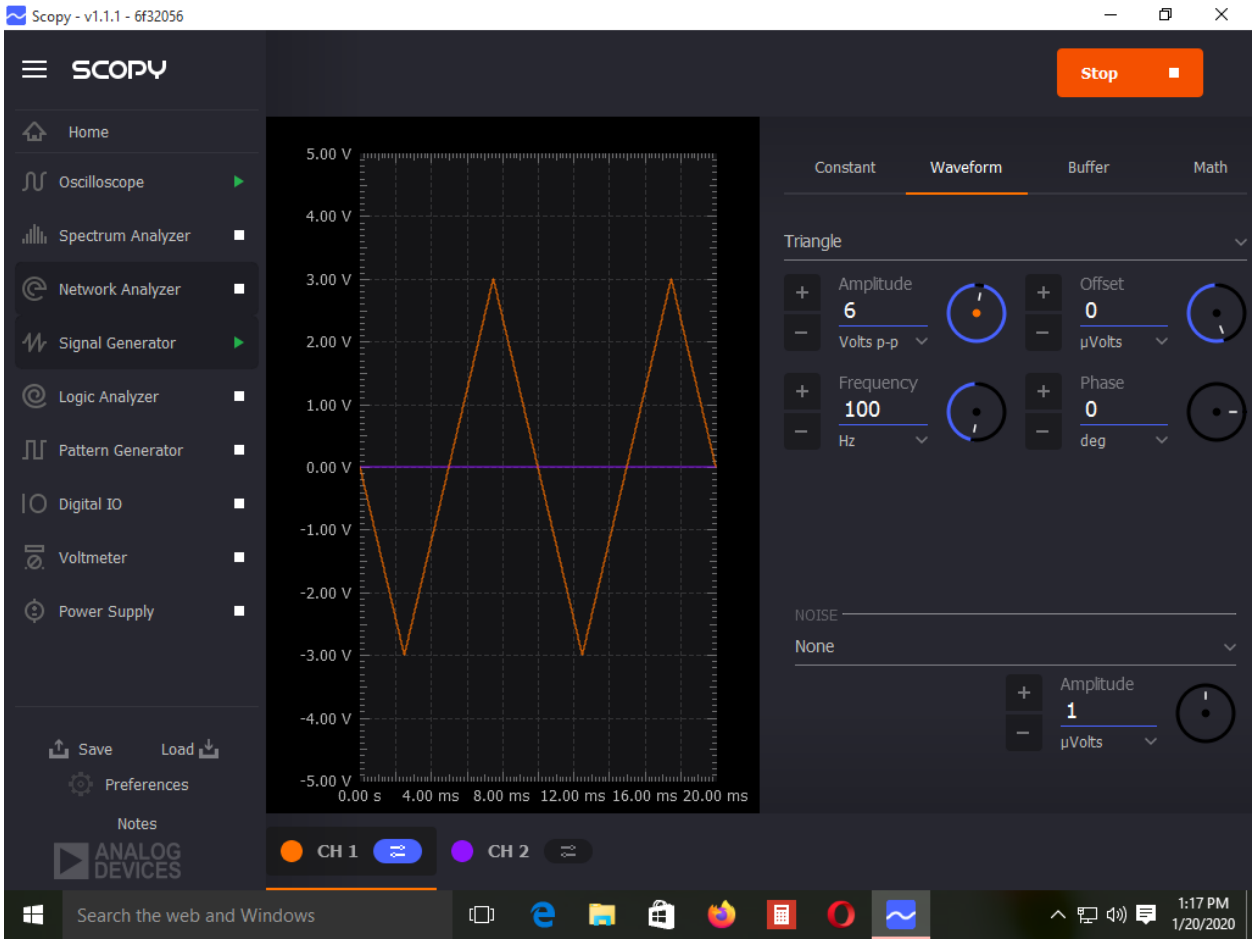

IV Curve

Run signal generator and XY plot to get output like this

CH – 1 X-axis voltage across diode

CH – 2 Y-axis current through diode (Voltage across the resistor)

Response for DC

Change signal generator to constant mode and gradually change voltage and take readings for current through diode and voltage across diode

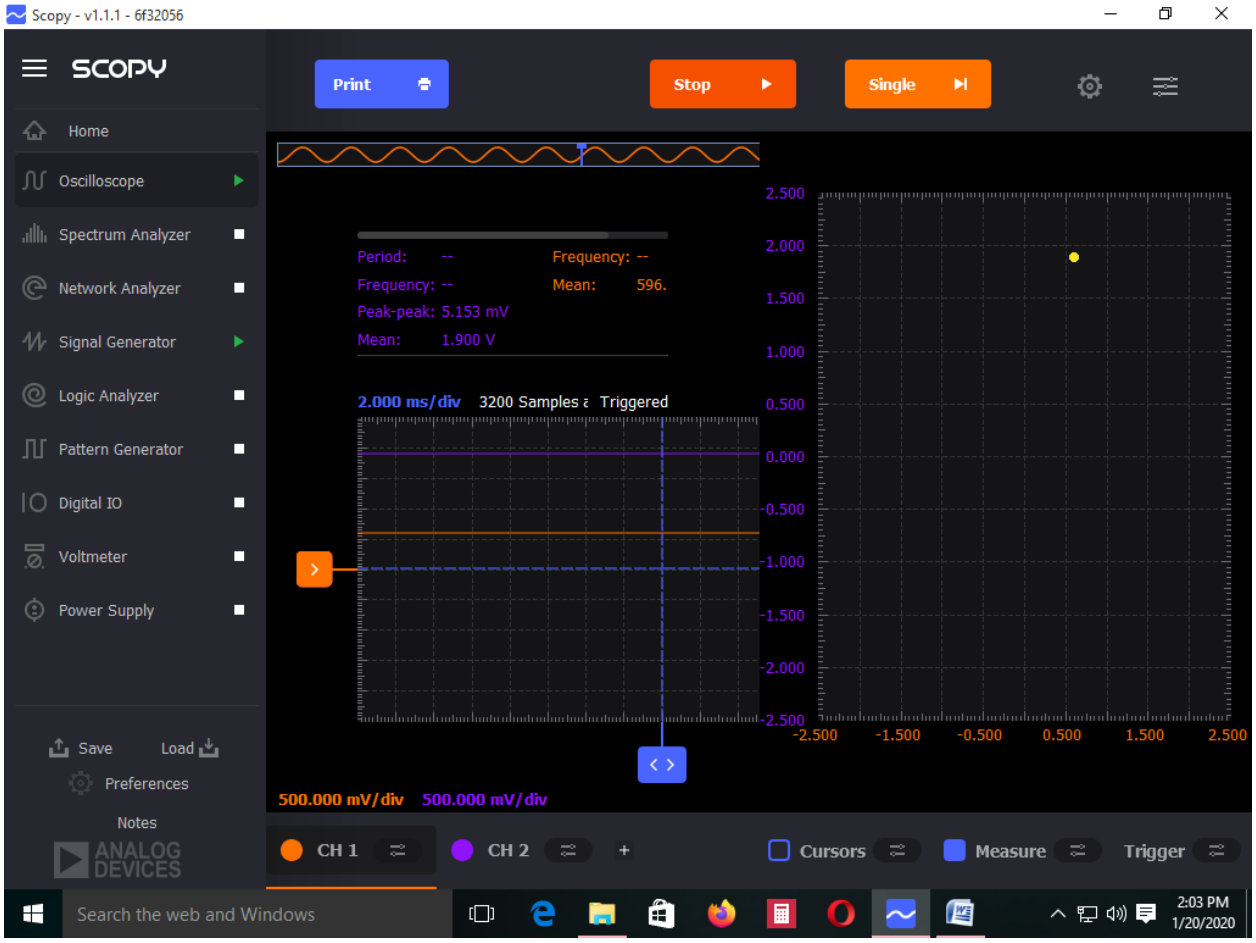

YOUR PART

Take reading as follows and plot the graph

S.NO	Voltage across diode	Current through diode
1	0.3 V	
2	0.4 V	
3	0.5V	
4	0.7V	
5	0.8V	
6	0.9V	
7	1.00V	
8	2.00V	
9	3.00V	

Observe whether it is same as you saw in the scope

Half wave rectifier

Objective:

The purpose of this activity is to investigate the use of a diode as a half wave rectifier.

Materials:

1 - Resistor (4.7KΩ or any similar value)
1 - small signal diode (1N914 or similar)

Directions:

Set up the breadboard with waveform generator output W1 attached to one end of the diode. The other end of the diode is connected to one end of the load resistor as shown in figure 6. The other end of the resistor is connected to ground. Single ended input of scope channel 2 (2+) is also connected to the end of the resistor not connected to ground (2- input can be grounded).

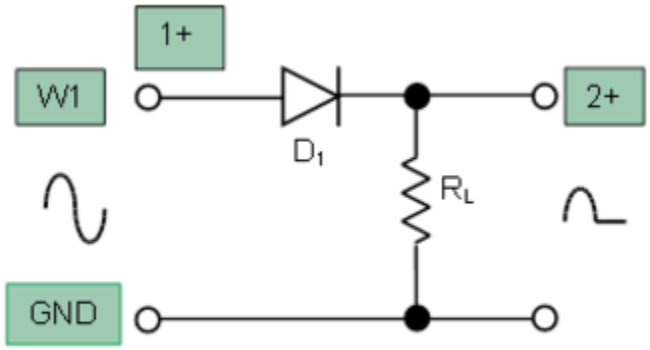

Figure 6. Connection diagram for half wave diode rectifier

Hardware Setup:

The waveform generator should be configured for a 100 Hz Sine wave with 6 volt amplitude peak-to-peak and 0 volt offset. The scope channel 2 (2+) is used to measure the voltage across the load resistor, R_L. Both scope channels should be set to 500mV per division.

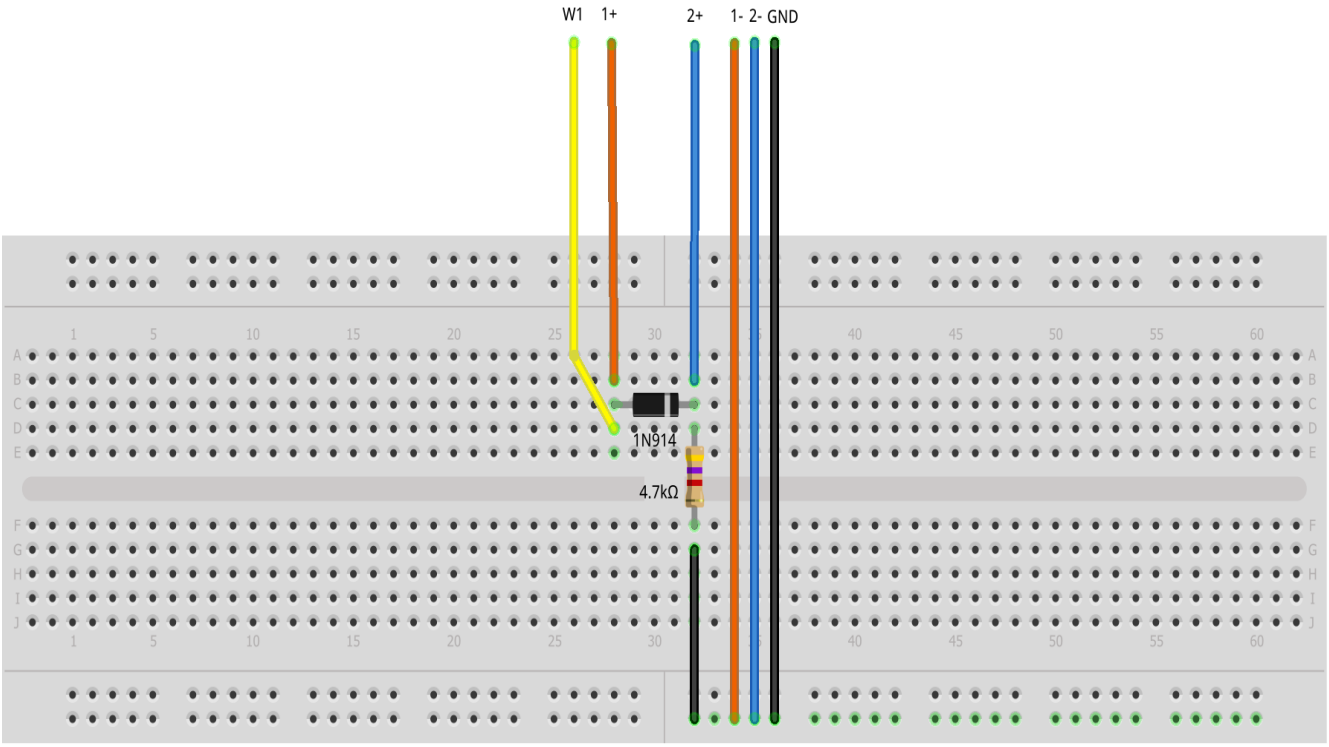

Figure 7. Half Wave Diode Rectifier Breadboard Circuit

Procedure:

Plot the two waveforms using Oscilloscope feature from the Scopy tool.

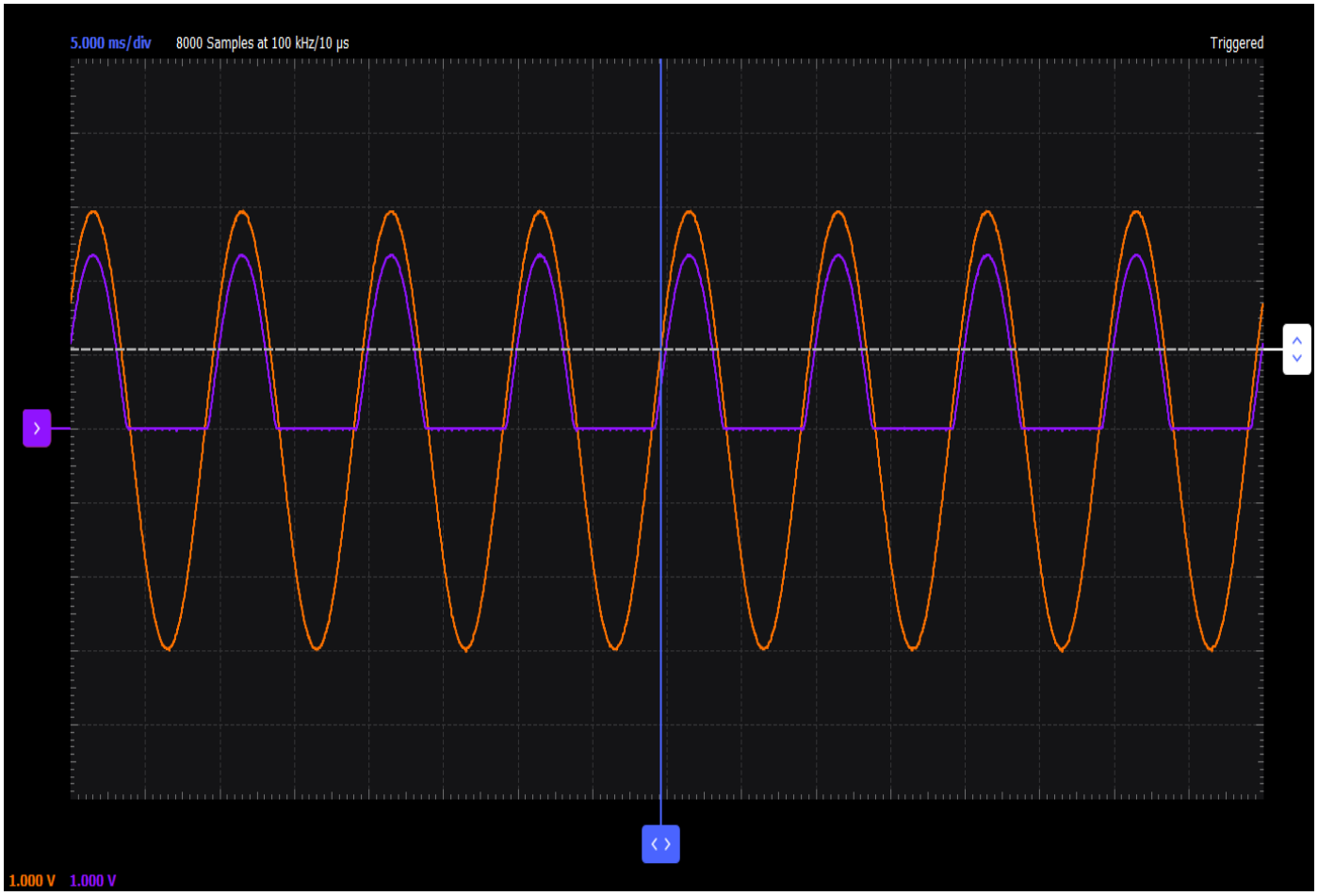

Figure 8. Half Wave rectified waveform

Questions:

Why is the peak value of the rectified output less than the peak value of the AC input and by how much? At what point in the input waveform does the rectified waveform become positive i.e. something other than zero? What happens if the direction of the diode is reversed? Repeat the experiment with the direction of the diode reversed.

Half wave rectified output

Here you can see output only in positive half cycle.

Also output available only if input greater than 0.6V of diode forward breakdown voltage

Full wave rectifier

Objective:

The purpose of this activity is to investigate the use of two diodes as a full wave rectifier.

Materials:

1 - Resistor (4.7KΩ or any similar value)
2 - small signal Diodes (1N914 or similar)

Directions:

Set up the breadboard with W1 attached to one end of the first diode, D_1, and W2 to one end of the second diode, D_2. Both diodes should face in the same direction. The other end of each diode is connected to one end of the load resistor as shown figure 9. The other end of the resistor is connected to ground. Single ended input of scope channel 2 (2+) is connected to the junction of the resistor and the two diodes.

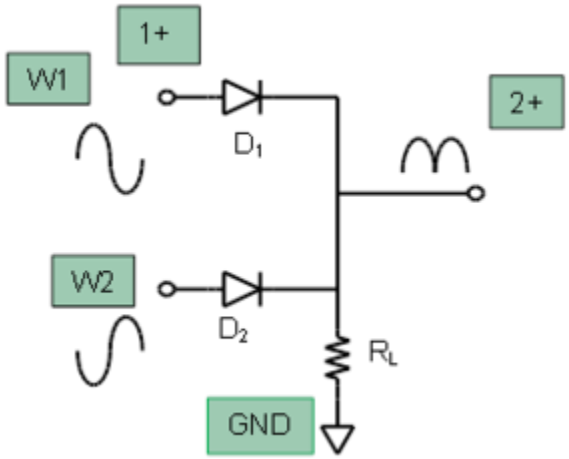

Figure 9. Connection diagram for full wave diode rectifier

Hardware Setup:

The first waveform generator, W1, should be configured for a 100 Hz Sine wave with 6 volt amplitude peak-to-peak and 0 volt offset. The second AWG generator, W2, should be configured also for a 100 Hz Sine wave with 6 volt peak-to-peak amplitude and 0 volt offset but with the phase set to 180 degrees. The Single ended input of scope channel 2 (2+) is used to measure the voltage across the load resistor. Both scope channels should be set to 500mV per division.

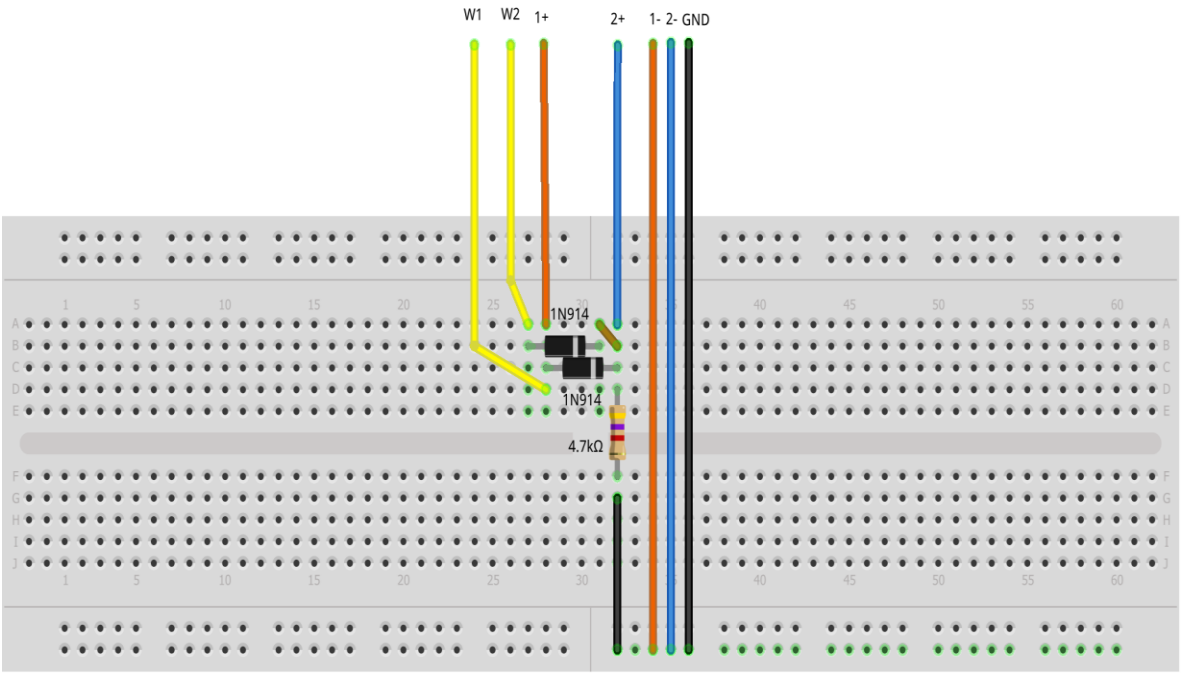

Figure 10. Full Wave Diode Rectifier Breadboard Circuit

Procedure:

Plot the two waveforms using the Oscilloscope provided by the Scopy tool. If both 0 degree and 180 degree phases of the AC input are available, then a second diode can fill in the missing half-wave of the input and produce the full-wave rectified signal shown in this plot. Again the forward voltage of the diodes is apparent and the output waveform does not come to a sharp point at the zero crossing due to the non-zero turn on voltage of the diodes.

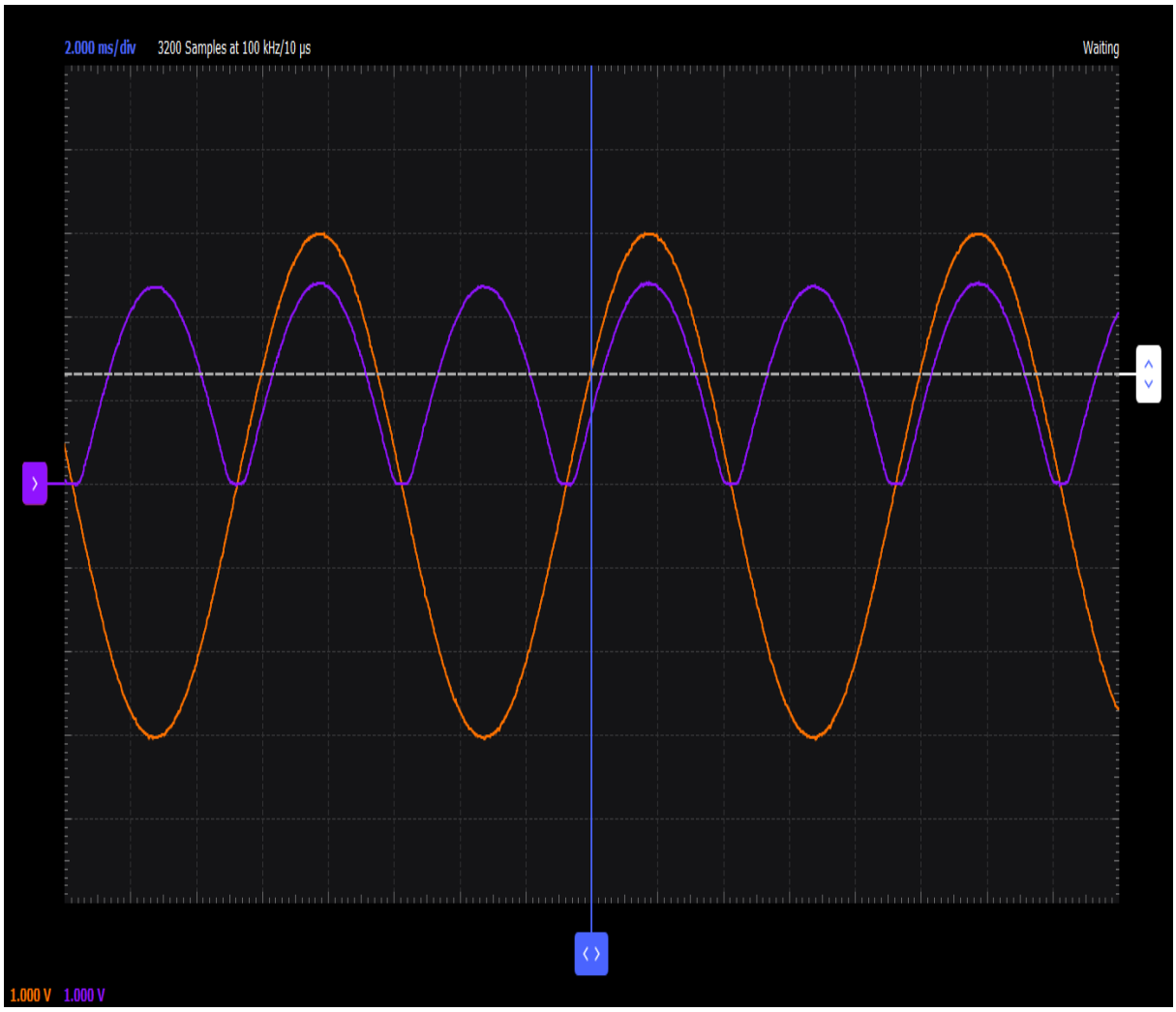

Figure 11. Full Wave rectified waveform

Full wave rectified wave form

Here you can see output in both half cycles.

Bridge rectifier

Objective:

The purpose of this activity is to investigate the use of four diodes as a bridge rectifier.

Materials:

1 - Resistor (4.7KΩ or any similar value)
4 - small signal Diodes (1N914 or similar)

Directions:

Four diodes can be arranged in a bridge configuration to provide a full-wave rectification from a single AC phase as shown here. However, it can also be seen that only the AC input or the load can be referenced to ground.

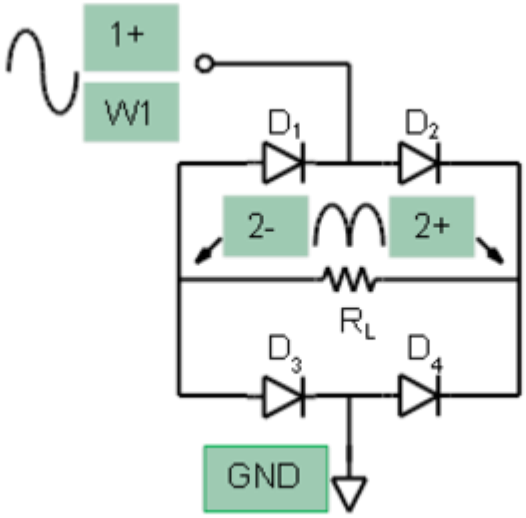

Figure 12. Connection diagram for diode bridge rectifier

Hardware Setup:

The waveform generator should be configured for a 100 Hz Sine wave with 6 volt peak-to-peak amplitude and 0 volt offset. The

scope channel 2 (2+. 2-) is used to measure the voltage across the load resistor, R_L. Both scope channels should be set to 500mV per division.

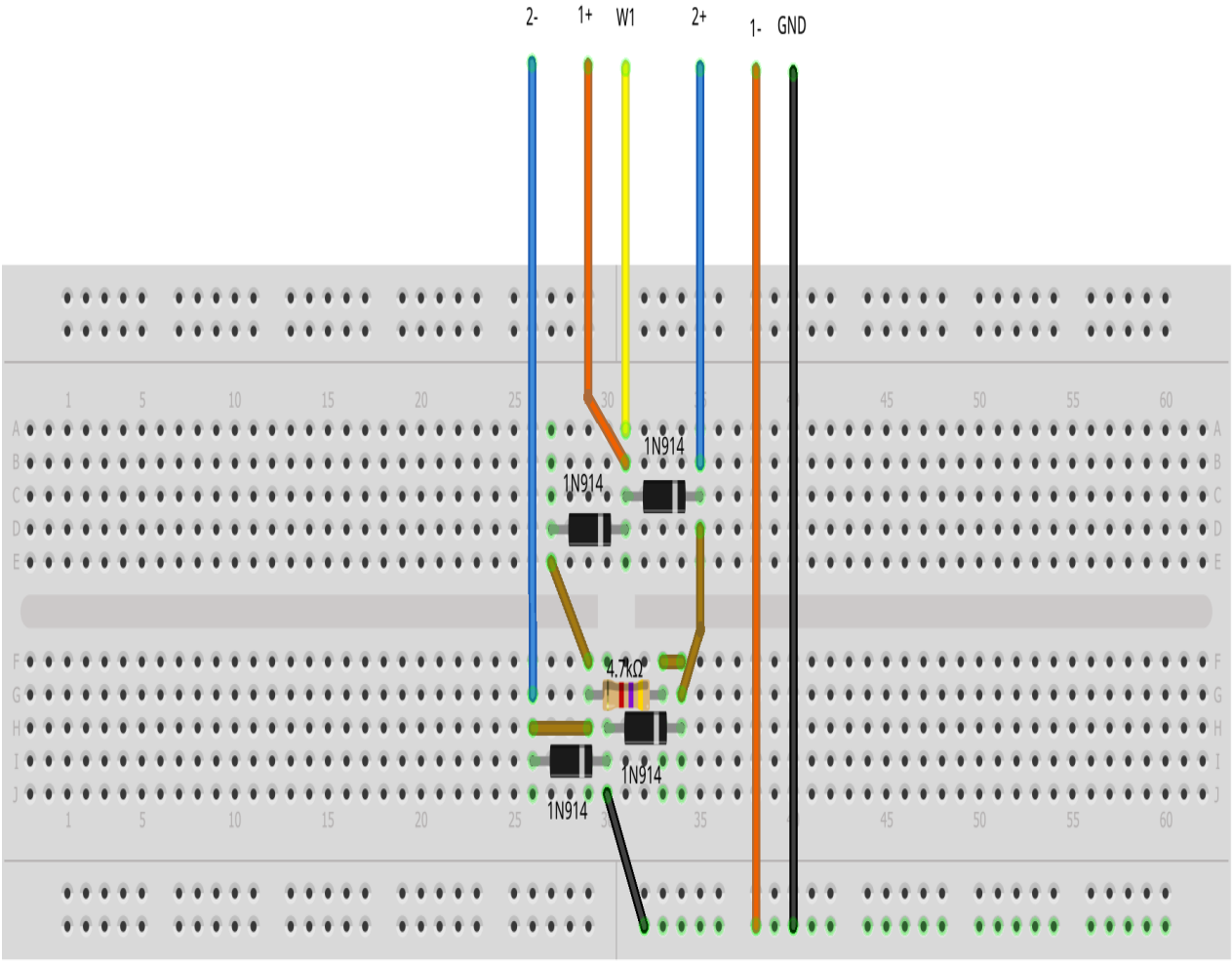

Figure 13. Diode Bridge Rectifier Breadboard Circuit

Procedure:

Plot the two waveforms using the Oscilloscope provided by the Scopy tool. The disadvantage of this circuit is that now two diode drops are in series with the load and the peak value of the rectified output is less than the AC input by 1.2 Volts rather than the 0.6 V in the previous circuits.

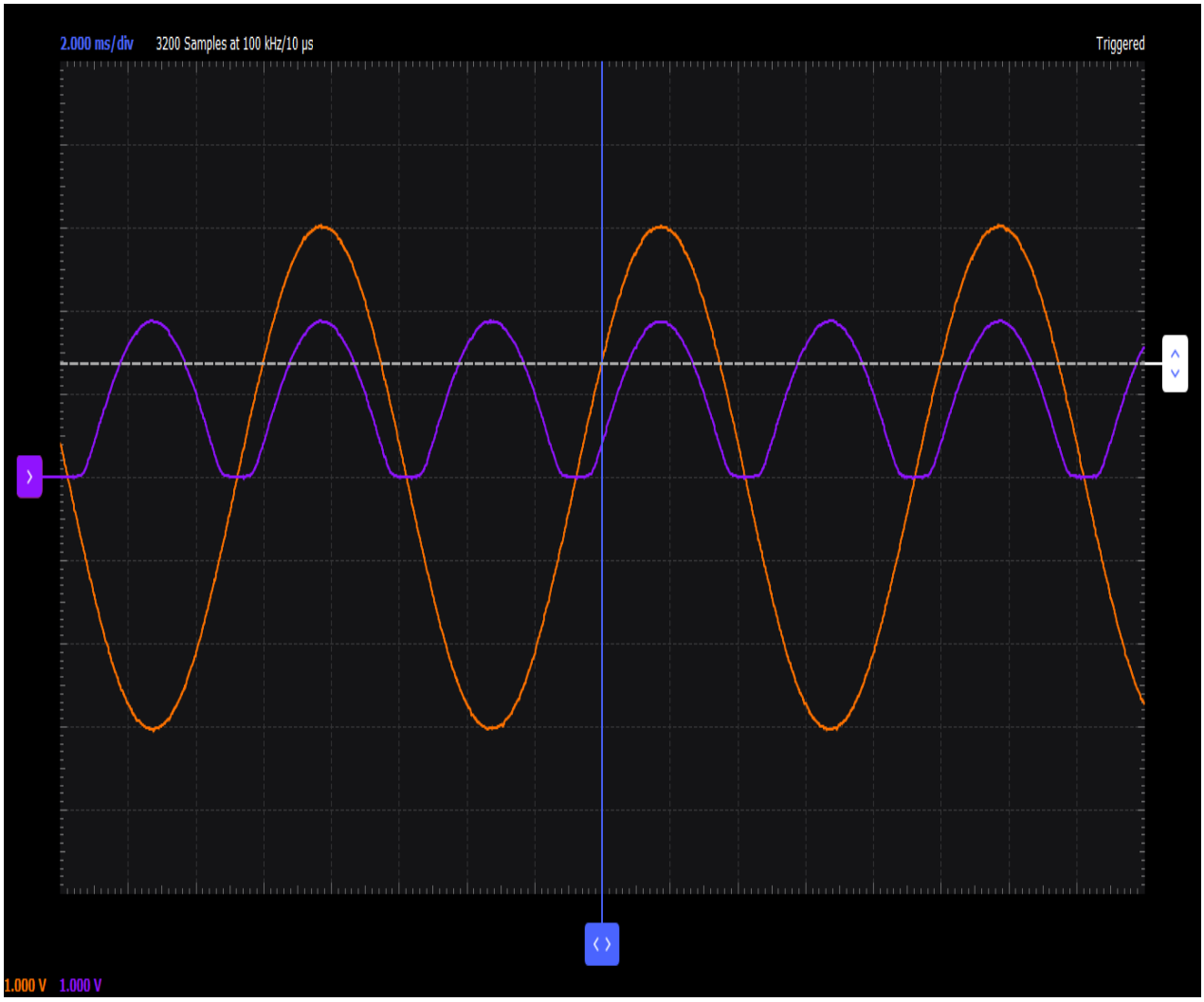

Figure 14. Full Wave Bridge rectifier waveforms

Bridge rectifier wave form

Here also you can see output in two half cycles. But total drop across diode is 1.2V

Your part

Buy a 15 – 0 -15 centre tapped transformer and 6 IN 4006 diodes

Two ends of the output are W1 & W2 and ground point is centre tap

Repeat all the experiments using real power supply using transformer.

Reference book for semiconductor devices

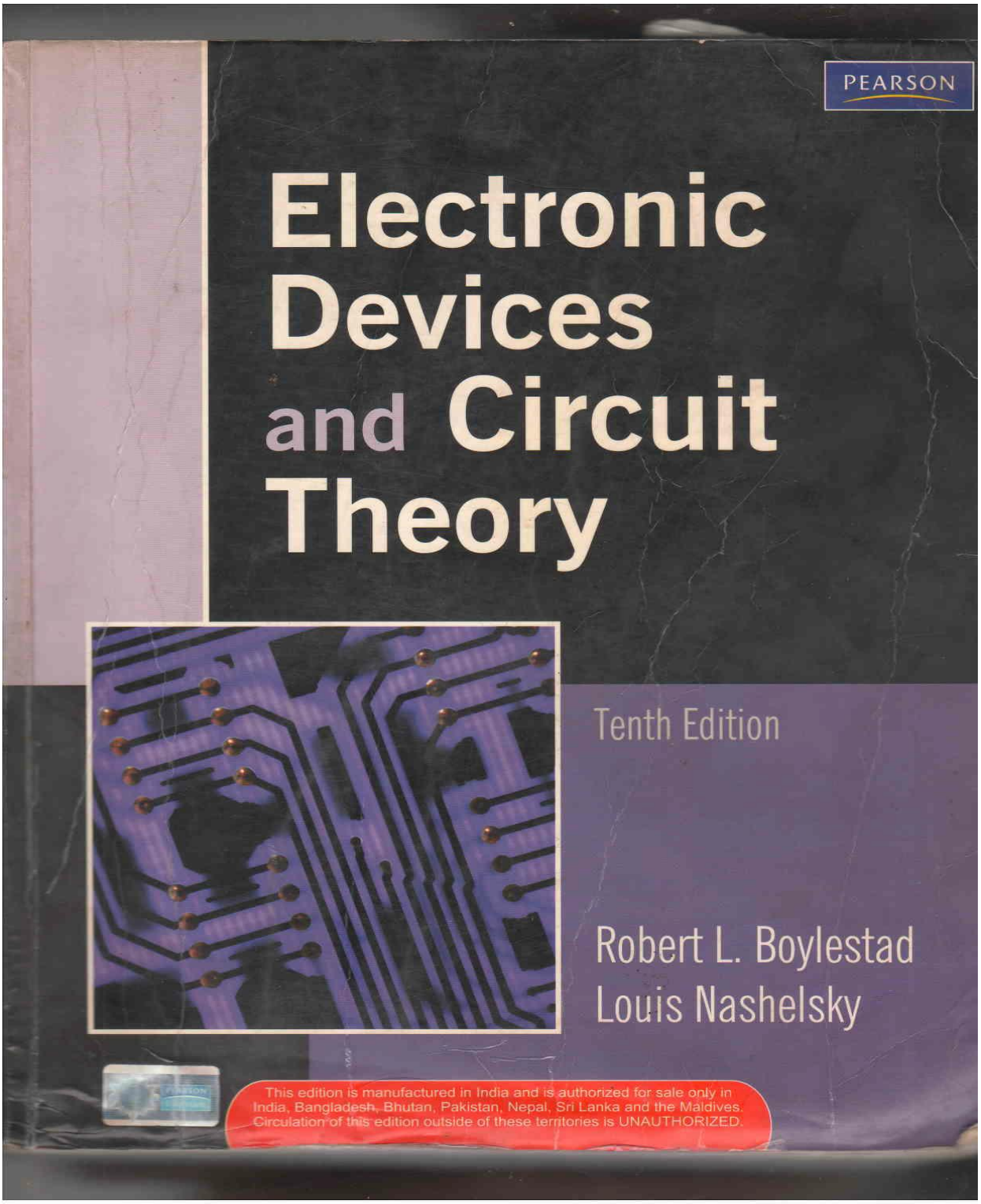

Introduction to semi conducter devices

Defnition

Semiconductors are special class of elements having conductivity between that of a good conductor and that of an insulator

Most frequently used three types are

1. Germanium (Ga)
2. Silicon (Si)
3. Gallium Arsenide(GaAs)

First diode developed in 1939 and first transistor in 1947

In these decades germanium was widely used.

Germanium has the drawback of reliability, particularly temperature sensitivity

Scientist were aware of silicon at that time. But manufacturing silicon of high purity was the challenge.

First silicon transistor came in 1954.

Advantages of silicon.

1. Very abundant material
2. Less temperature sensitive

Gallium Arsenide(GaSa)

Gallium Arsenide was more difficult to manufacture at high purity and was more expensive. First GaSa transistor came at 1970. However in time demand for increase speed resulted in more funding for GaSa. Today it is consistently used as the base

material for new high speed , very large scale integrated circuit designs (VLSI).

Covalent bonding and intrinsic materials

To fully understand why Si, Ge, & GaSa are semiconductors of choice for electronics requires some understanding of the atomic structure of each and how the atoms are bound together to form a crystalline structure. The Bohr model for three materials is given below.

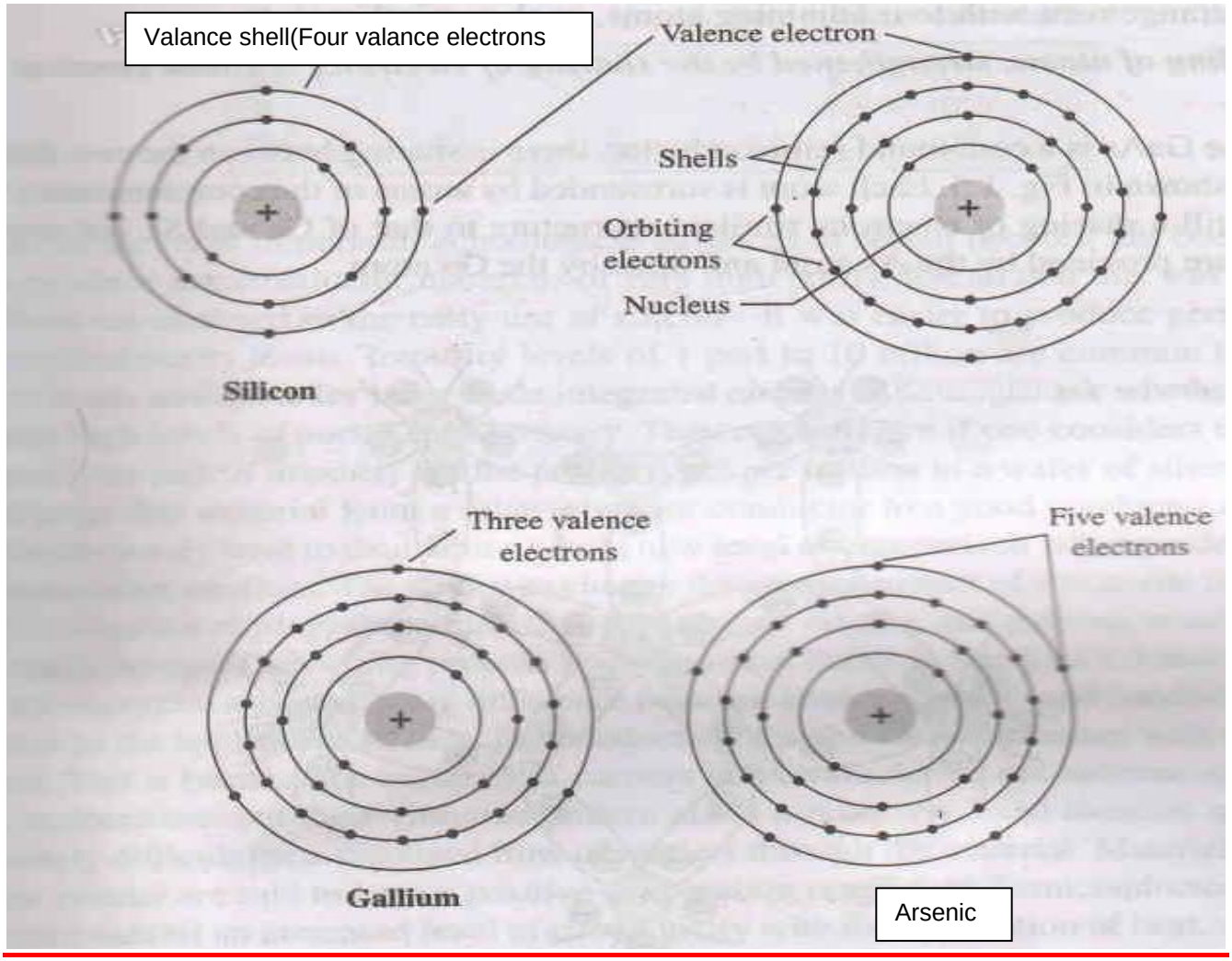

Atomic structure

Atoms have

1. Nucleus
2. Electrons

Nucleus has both neutron and protons

Electron appears in fixed orbit around nucleus. Each orbits are numbered n=1,n=2 and so on. Number of electrons in an orbit is given by the formula

No. of electrons = $2n^2$ where n denote orbit number.

Valance electrons

The number of electrons in the outer most orbit is called the valance electrons.

The term valance is used to indicate that the potential required (ionization potential) to remove any electron from the atomic structure is significantly lower than that required for any other electrons in the structure.

Only valence electrons participate in any chemical reactions & so valance electrons are important for an atom that determines the chemical property.

Atoms that has eight electrons in the outer most orbit are stable. So atoms always try to attain to attain stable state by sharing, donating or accepting the valance electrons with other atoms of same type or different type. This is how the molecules are formed.

Single crystal semiconductors

In general semiconductors fall into one of the two classes. Single crystal and compound. Silicon is a single crystal semiconductor. Single crystal structure meaning all atoms are of same type having same atomic number

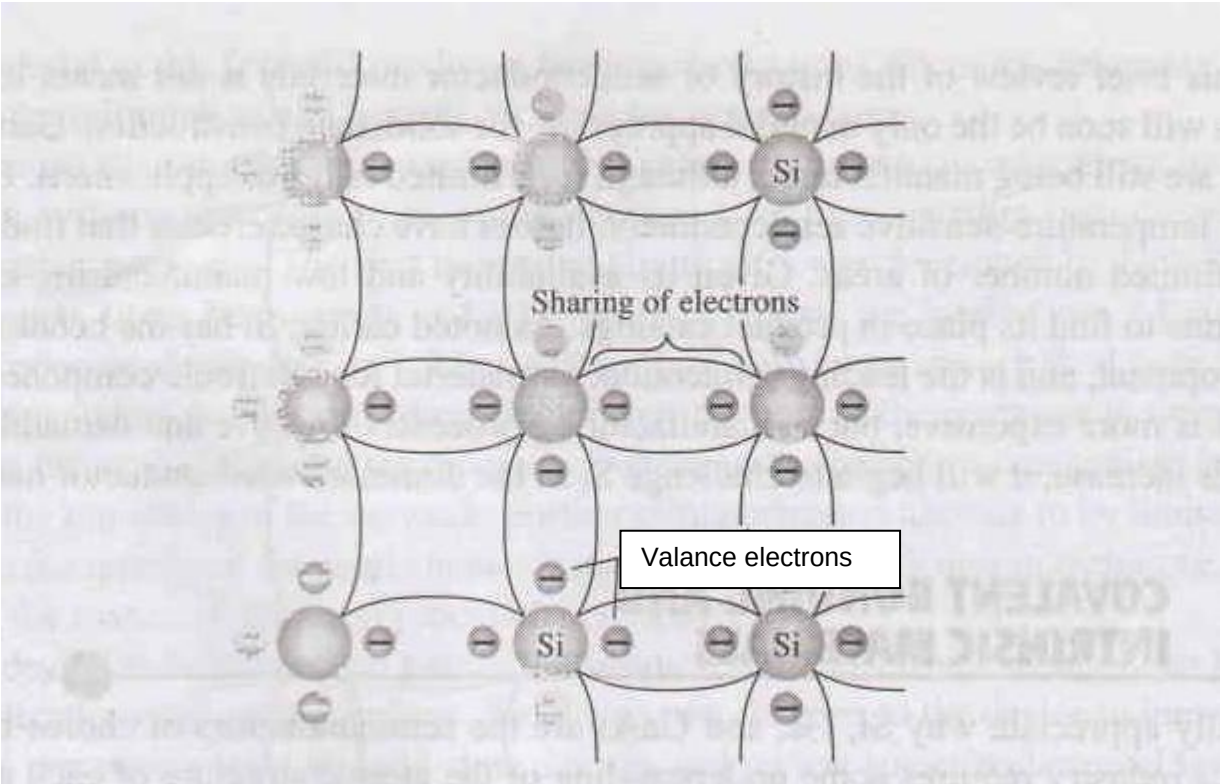

Covalent bonding of silicon atom

Silicon has 14 orbiting electrons , germanium has 32, gallium has 31 & arsenic has 33 orbiting electrons. Silicon has four electrons in the outer most orbit which mean that it has four valance electrons.

In a pure silicon or germanium crystal the four valance electrons of one atom form a bonding arrangement with four adjoin atoms as shown in figure.

This bonding of atoms by sharing of electrons is called covalent bonding. By this way silicon have 8 electrons in the outer most orbit & attain stability.

Silicon has 14 orbiting electrons, germanium has 32, gallium has 31 & arsenic has 33 orbiting electrons. Silicon has four electrons in the outer most orbit which mean that it has four valance electrons.

In a pure silicon or germanium crystal the four valance electrons of one atom form a bonding arrangement with four adjoin atoms as shown in figure.

This bonding of atoms by sharing of electrons is called covalent bonding. By this way silicon have 8 electrons in the outer most orbit & attain stability.

Gallium arsenide (GaSa)

Because GaSa is a compound semiconductor there is a sharing between the two different atom as shown in the figure. Each atom is surrounded by atom of complementary type. there is still sharing of electrons similar in structure to that of Ge and Si. But now five electrons are provided by the As atom and three by Ga atom.

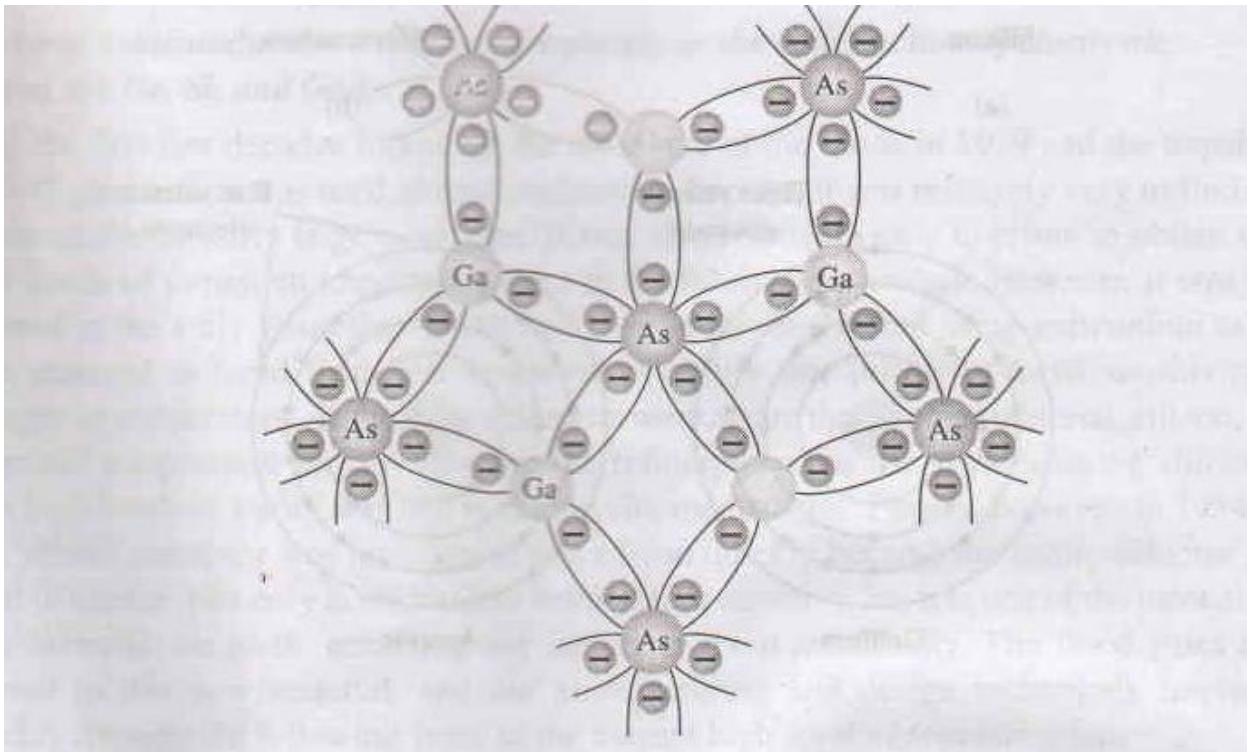

Covalent bonding of the GaAs crystal.

Although the covalent bond will result in a stronger bond between the valence electrons and their parent atom, it is still possible for the valence electrons to absorb sufficient kinetic energy from external natural causes to break the covalent bond and assume the "free" state. The term free is applied to any electron that has separated from the fixed lattice structure and is very sensitive to any applied electric fields such as established by voltage sources or any difference in potential. The external causes include effects such as light energy in the form of photons and thermal energy (heat)from the surrounding medium. At room temperature there are approximately 1.5 X 1010 free carriers in I cm3 of intrinsic silicon material, that is, 15,000,000,000 (15 billion) electrons in a space smaller than a small sugar cube- an enormous number.

The term intrinsic applied to any semiconductor material that has been carefully refined to reduce the number of impurities to a very low leading essentially as pure as can be made available through the modern technology.

The number of carriers in the intrinsic form is important, but other characteristic of material are more significant in determining its use in the field. One such factor is the relative mobility (μ_0) of free carriers to move through the material .Table 2 clearly reveals that the free carrier in GaSa have more than five times the mobility of free carriers in Si, a factor that result in response time using GaSa electronic devices that can be up to five times those of the same device made from silicon.

Temperature coefficient

Semiconductor materials exhibit an increased level of conductivity with the application of heat. As the temperature rises an increasing number of valence electrons absorb sufficient thermal energy to break the covalent bond and to contribute to the number of free carriers. Thus semiconductors have negative temperature co-efficient of resistance.

Table 1

semiconductor	Intrinsic carriers per cubic cm
GaSa	$1.7*10^{6}$
Si	$1.5*10^{10}$
Ge	$2.5*10^{13}$

Table 2

semiconductor	$\mu 0$ (cm^2 / V.s)
GaSa	$1.7*10^{6}$
Si	$1.5*10^{10}$
Ge	$2.5*10^{13}$

Energy levels

Within the atomic structure each and every isolated atoms there are specific energy levels associated with each shell and orbiting electrons as shown in figure.

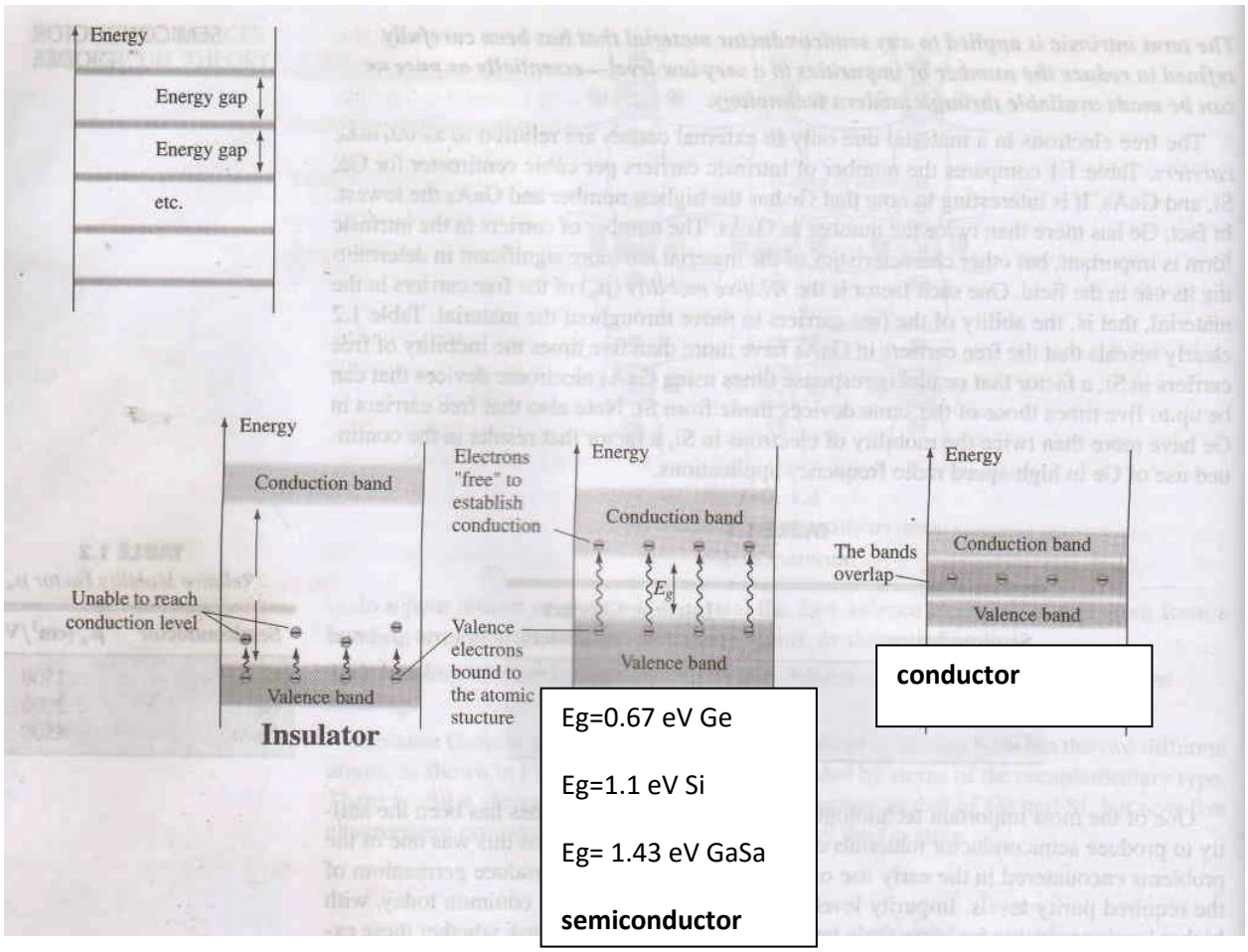

The energy level associated with each shell will be different for every element. However ,in general:

The farther an electron from the nucleus ,the higher the energy state, and any electron that has left its parent atom has higher energy state than any electron in the atomic structure.

In figure a note that only specific energy levels can exist for the electrons in atomic structure of an isolated atom. This result in a

series of gaps between allowed energy levels where carriers are note permitted.

However, as the atoms of a material are brought closer together to form the crystal lattice structure, there is an interaction between atoms, which will result in the electrons of a particular shell of an atom having slightly different energy levels from electrons in the same orbit of an adjoining atom. The result is an expansion of the fixed, discrete energy levels of the valence electrons of Fig.a to bands as shown in Fig.b In other words, the valence electrons in a silicon material can have varying energy levels as long as they fall within the band of Fig. 1.6b. Figure l.6b clearly reveals that there is a minimum energy level associated with electrons in the conduction band and a maximum energy level of electrons bound to the valence shell of the atom. Between the two is an energy gap that the electron in the valence band must overcome to become a free carrier. That energy gap is different for Ge, Si. and GaAs; Ge has the smallest gap and GaAs the largest gap. In total, this simply means that:

An electron in the valence band of silicon must absorb more energy than one in the valence band of germanium to become a free carrier similarly, an electron in the valence band of gallium arsenide must gain more energy than one in silicon or germanium to enter the conduction band.

This difference in energy gap requirements reveals the sensitivity of each type of semiconductor to changes in temperature. For instance, as the temperature of a Ge sample increases the number of electrons that can pick up thermal energy and enter the conduction band will increase quite rapidly because the energy gap is quite small. However, the number of electrons entering the conduction band for Si, or GaAs would be a great deal less. This

Sensitivity to changes in energy level can have positive and negative effects. The design of photo detectors sensitive to light and security systems sensitive to heat would appear to be an excellent area of application for Ge devices. However, for transistor networks, where stability is a high priority, this sensitivity to temperature or light can be a detrimental factor.

The unit for measurements are in electron volts (eV) in figure. The unit of measure is appropriate because energy W =QV(as derived from defining equation for voltage V= W/Q).Substituting the charge of one electron and potential difference of 1 V results in energy level referred as one electron volt.

Extrinsic material

The characteristic of semiconductor material can be altered significantly by addition of specific impurity atoms to the relatively pure semiconductor material .the impurities although only added at 1 part per 10 million, can alter the band structure sufficiently to totally change the electrical properties of the material.

A semiconductor material that has been subjected to doping is called an extrinsic material.

There are two type of semiconductor material of immeasurable to importance to semiconductor device fabrication :

1. n-type material
2. p-type material

n-type material

Both n-type and p-type material are formed by adding a predetermined number of impurity atom to silicon base. An n-type material is created by introducing impurity element that have five

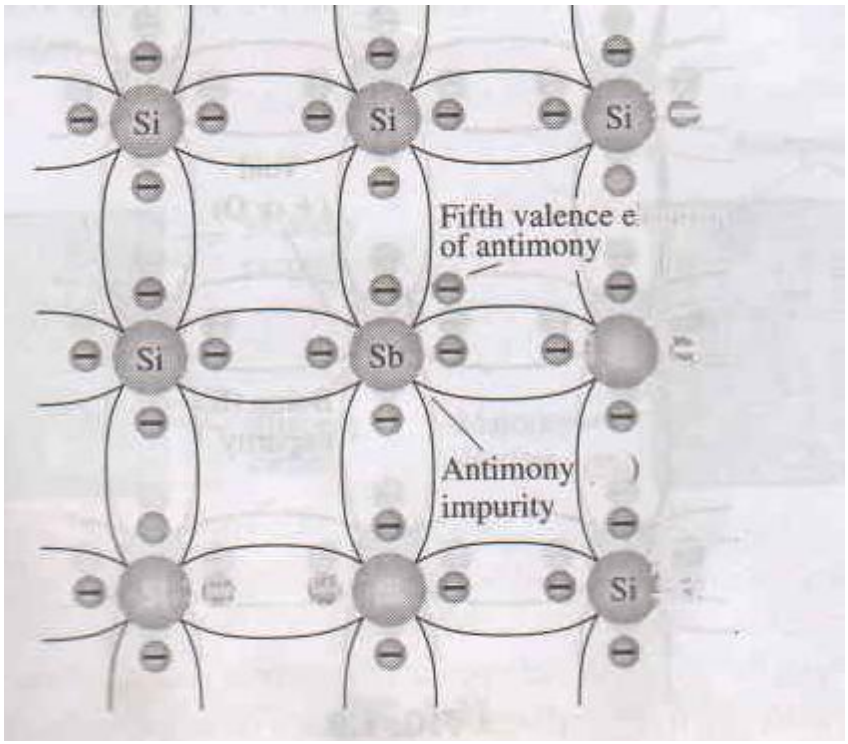

Valance electrons (pentavalent) such as antimony arsenic & phosphrous.The effect of such impurity elements is indicated in figure.

Note that four covalent bonds are still present. There is, however, an additional fifth electron due to the impurity atom, which is unassociated with any particular covalent bond. This remaining electron, loosely bound to its parent (antimony) atom, is relatively free to move within the newly formed n-type material. Since the inserted impurity atom has donated a relatively "free" electron to the structure:

Diffused impurities with five valence electrons are called donor atoms.

It is important to realize that even though a large number of free carriers have been established in the n-type material, it is still electrically neutral since ideally the number of positively charged

protons in the nuclei is still equal to the number of free and orbiting negatively charged electrons in the structure. The effect of this doping process on the relative conductivity can best be described through the use of the energy-band diagram of Fig. 1.8. Note that a discrete energy level (called the donor level) appears in the forbidden band with an Eg significantly less than that of the intrinsic material. Those free electrons due to the added impurity sit at this energy level and have less difficulty absorbing a sufficient measure of thermal energy to move into the conduction band at room temperature. The result is that at room temperature, there are a large number of carriers (electrons) in the conduction level, and the conductivity of the material increases significantly. At room temperature in an intrinsic Si material there is about one free electron for every 10^{12} atoms. If the dosage level is 1 in 10 million(10^{7}), the ratio $10^{12}/\ 10^{12}=\ 10^{5}$ indicates that the carrier concentration has increased by a ratio of 100,000 :1.

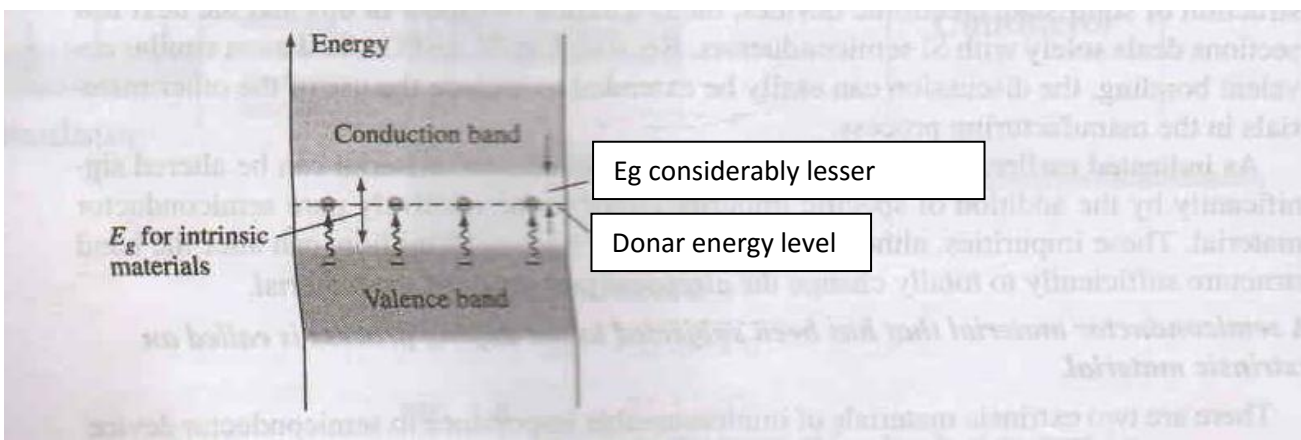

p-type material

The p-type material is formed by doping a pure germanium or silicon atom with impurity atoms having three valance electrons. The elements most frequently used are boron, gallium, and indium. The effect of these element is indicated in figure

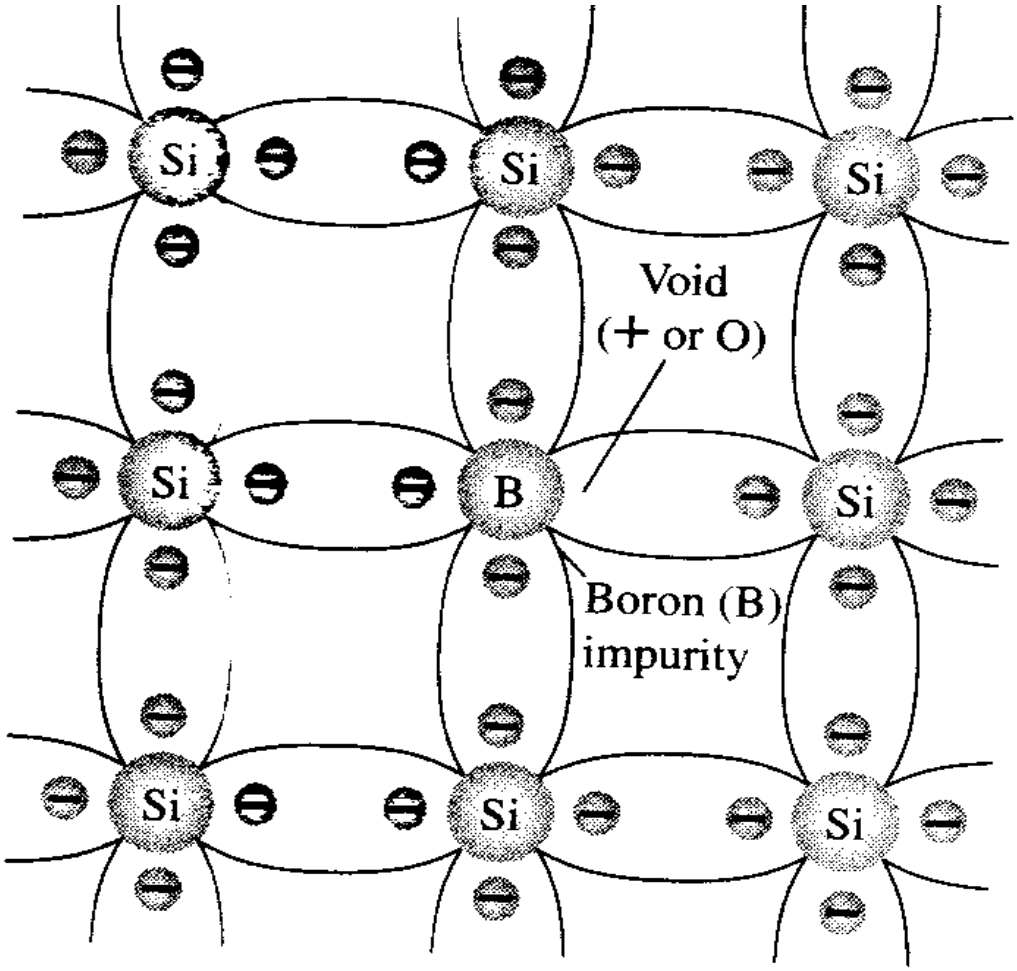

Now note that there is now an in sufficient number of electrons to complete the covalent bonds of newly formed lattice. The resulting valence is called a hole

The diffused impurities with three electrons are called acceptor atoms.

Electron versus hole flow

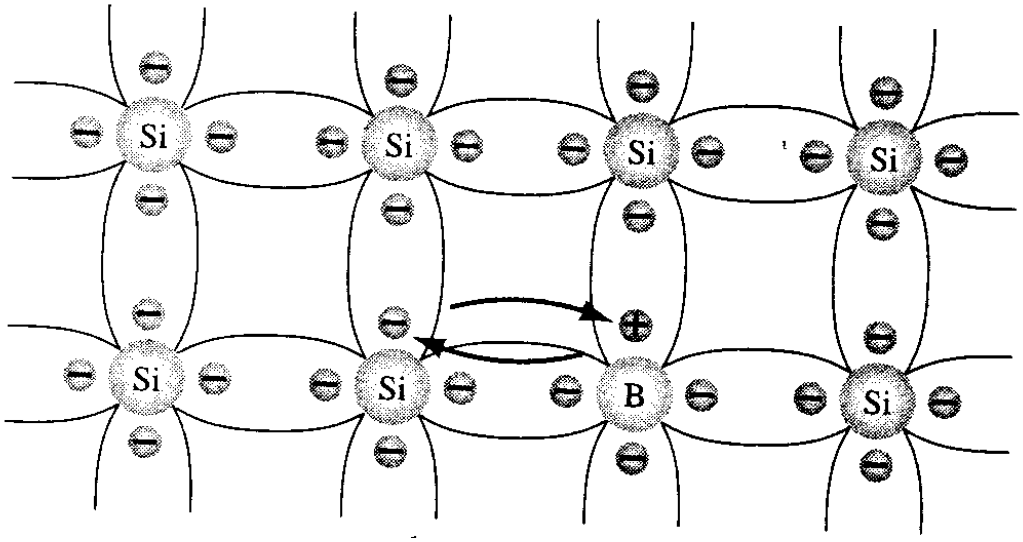

The effect of hole on conduction is shown in figure.If a valence electron acquires sufficient kinetic energy to break its covalent bond and fills the void created by a hole, then a vacancy, or hole, will be created in the covalent bond that released the electron. There is therefore ,a transfer of holes to the left and electrons to the right, as shown in the figure.

Majority and minority carriers

In an n-type material the electrons is called majority carrier and holes are called minority carriers.

In a p-type material the hole is the majority carrier and electrons are minority carriers.

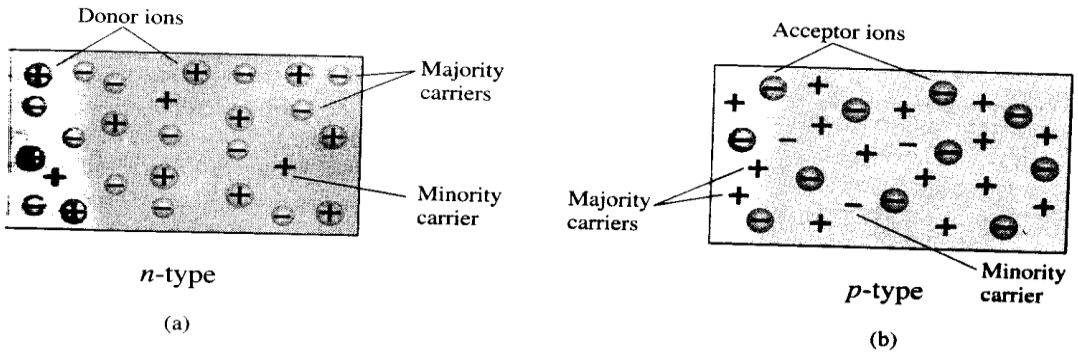

Semiconductor diode

The PN is formed by simply joining an n-type material and p-type material together. At the instant the two materials are joined the electrons and holes in the junction will combine resulting in the

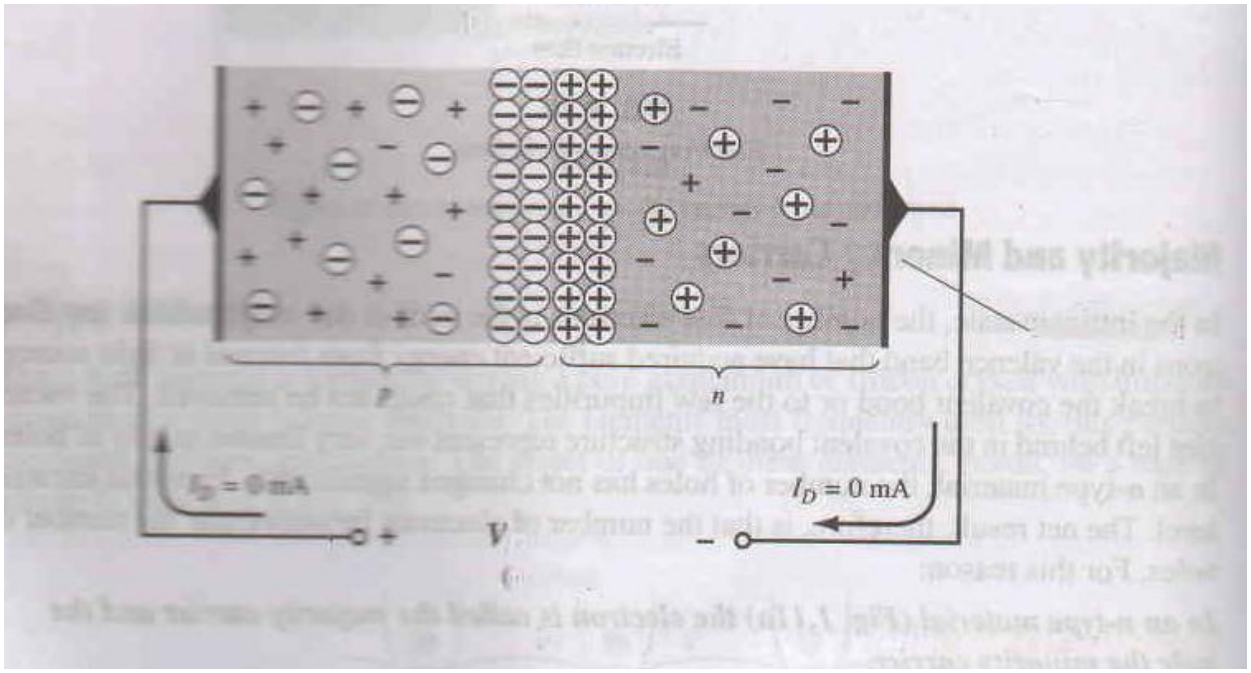

Lack of free carriers in the junction region as shown in figure.I*n* this region only positive and negative ions remain once free carriers are absorbed.

The region of uncovered positive and negative ions is called depletion region due to the depletion of free carriers in the region.

Reverse bias condition

If an external potential is applied across PN Junction such that the

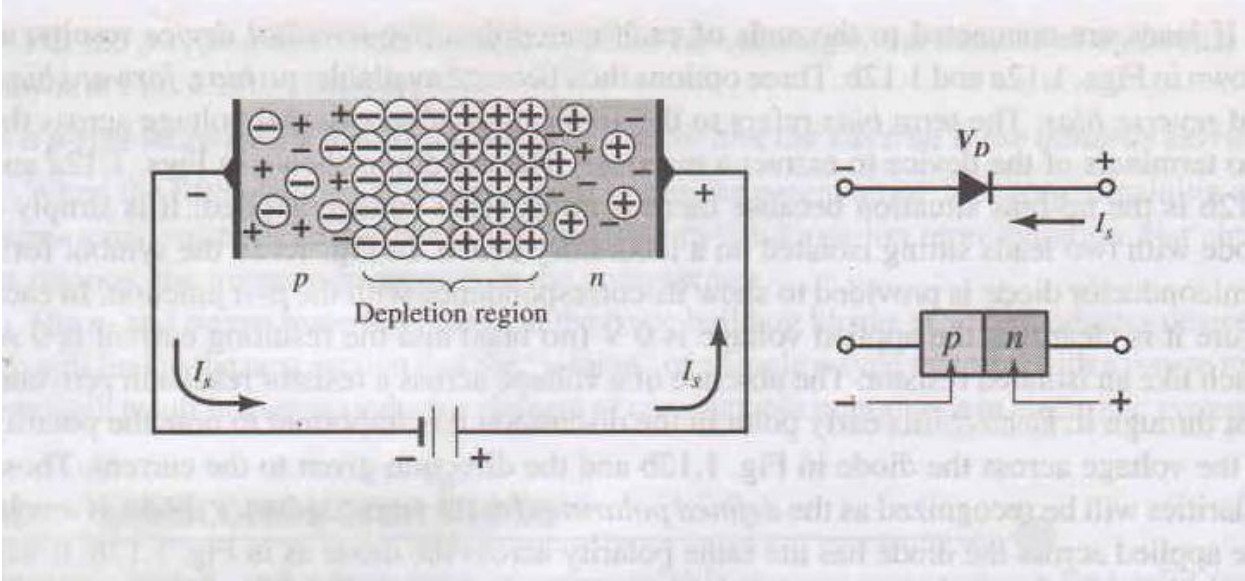

positive terminal is connected to the n-type material and negative terminal is connected to the p-type material as shown in the figure, the number of uncovered positive ions in the depletion region of n-type material due to the large number of free electrons drawn to the positive potential of applied voltage. Similarly the numbered uncovered negative ions will increase in the p-type material. The net effect ,therefore is a widening of depletion region. This widening of will establish too great a barrier for majority carrier to overcome ,effectively resulting the majority carrier flow to zero.

The number of minority carrier however ,entering the depletion region will not change, resulting in minority carrier flow of microamperes.

Forward bias condition

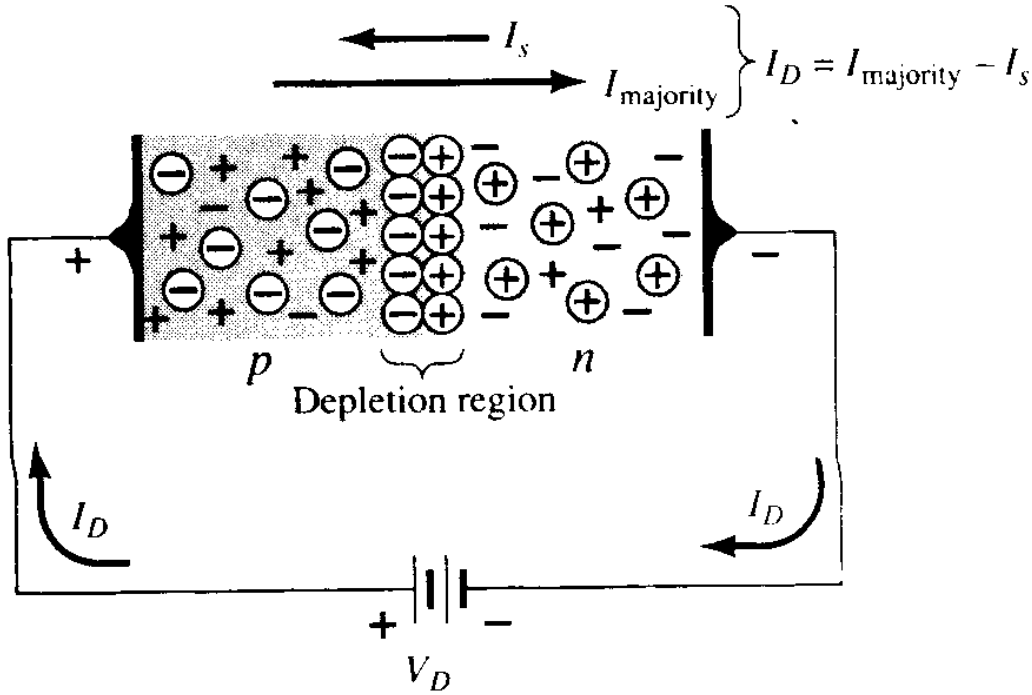

Forward biased condition is achieved by applying positive voltage to p-type and negative supply to n-type material. the application of forward bias will pressure electrons in the n-type material and holes in p-type materials to recombine with ions near the boundary and reduce the width of depletion region. The reduction in the width of depletion region results in heavy majority carrier flow across the junction. As the applied bias increases in magnitude, the depletion region continue to decrease in width until a flood of electrons can pass through the junction ,resulting exponential raise in current.

The number of minority carrier however ,entering the depletion region will not change, resulting in minority carrier flow of microamperes.

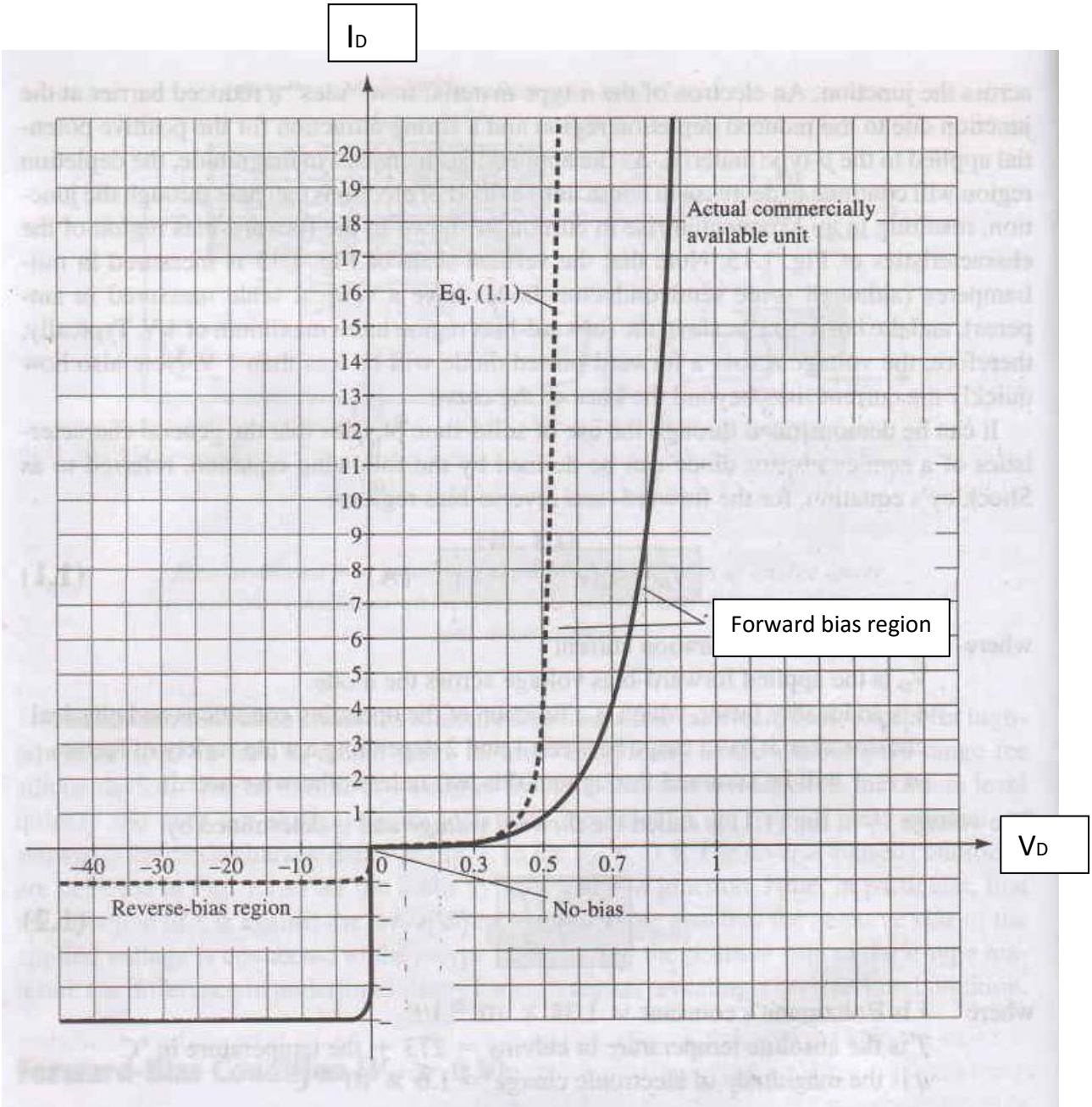

Silicon semiconductor device characteristics