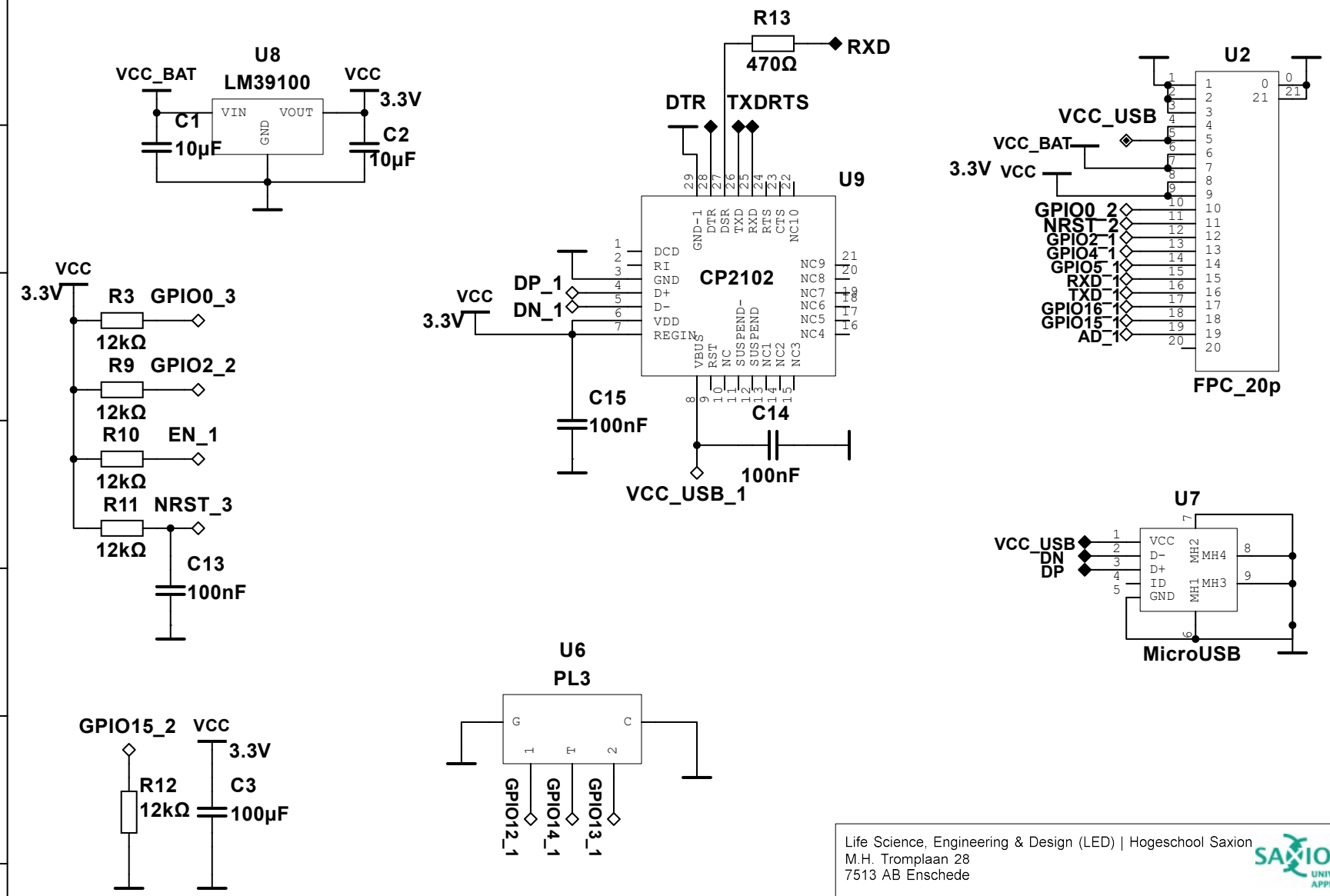

Life Science, Engineering & Design (LED) | Hogeschool Saxion
M.H. Tromplaan 28
7513 AB Enschede

Title: Smart Watch	Desc.: Group 2 - Smart Watch layer2	
Designed by: Group 2	Document No: 2	Revision: 1
Checked by: Umit Guler	Date: 5/28/2019	Size: A4
Approved by: Umit Guler	Sheet 2 of 2	