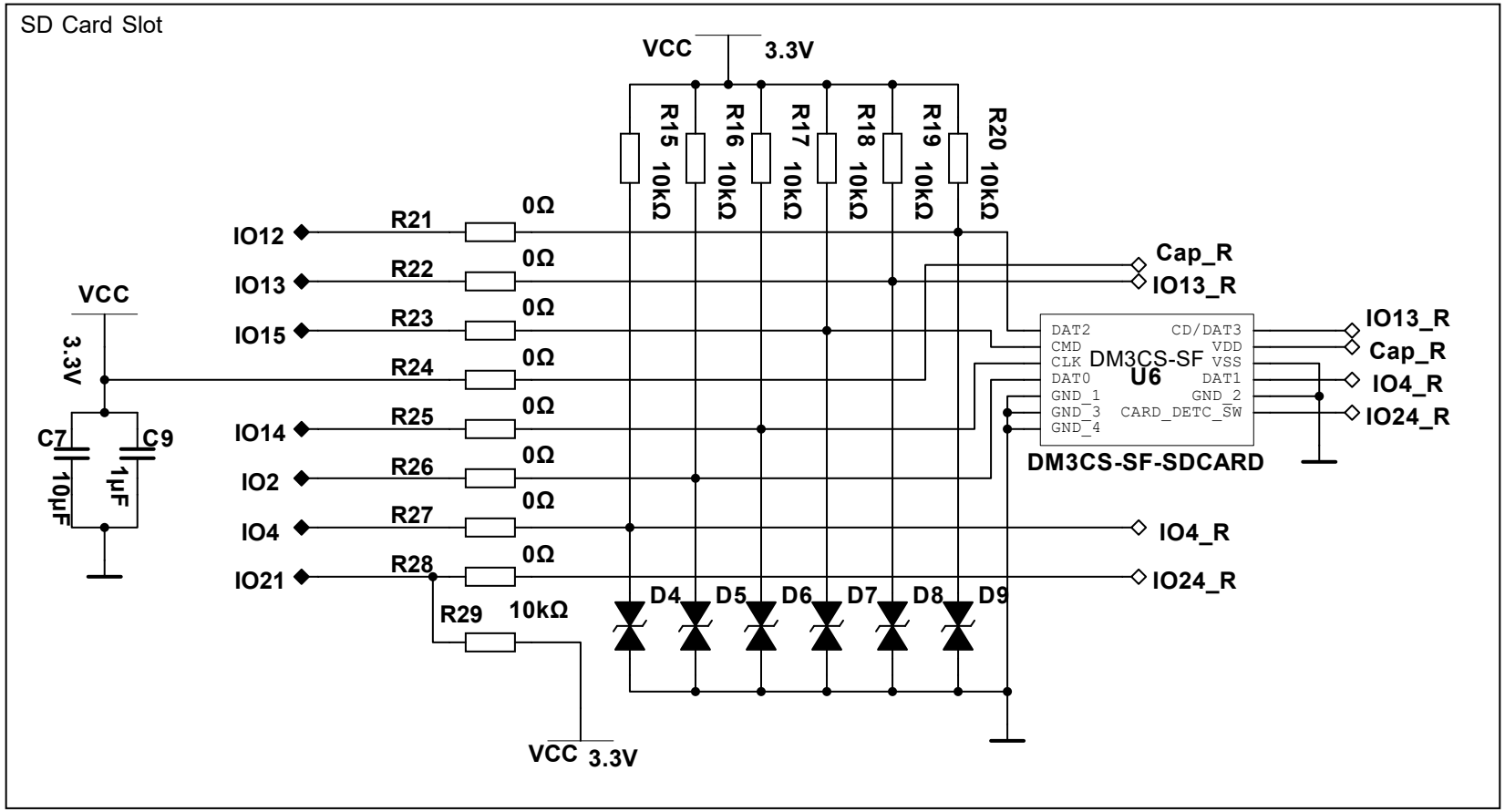

Life Science, Engineering & Design (LED) | Hogeschool Saxion
M.H. Tromplaan 28
7513 AB Enschede

Title: Intro Assigment 1	Desc.: SD card	
Designed by: Dimitar Rangelov	Document No: 3	Revision: 1
Checked by: Umit Guler	Date: 3/13/2019	Size: A
Approved by: Umit Guler	Sheet 3 of 6	