MATH1025B
Essential Mathematical Methods

Chapter 0: Preliminaries

September 3, 2025

Sets and Notations

- A **set** is a collection of different things. These things are called **elements** or members of the set.
- Set: usually denoted by $A, B, X, Y, \ldots$
  Element: usually denoted by $a, b, x, y, \ldots$
- If x is an element of a set A, we say that x **belongs to** A or x is in A, and write $x \in A$.
- If x is not an element of A, we write $x \notin A$.

Sets and Notations

- A is a **subset** of B: $\quad A \subseteq B \quad$ or $\quad B \supseteq A \quad$ if

  every element of A is also an element of B

  (i.e. if $x \in A$, then $x \in B$)

  For example, { all CC students } is a subset of { all CUHK students }.

- Two sets A and B are said to be **equal**, and we write $A = B$, if they have the same elements. Equivalently, this means that

$$A \subseteq B \quad \text{and} \quad B \subseteq A.$$

Sets and Notations

- A set is normally defined by
  (1) listing its elements explicitly:

$$\text{e.g.} \quad \{1,2,3\}, \quad \{0,1,2,3,\dots\}, \quad \{\frac{\pi}{2},\frac{\pi}{3},\frac{\pi}{4},\dots\}; \quad \text{or}$$

  (2) specifying a property that determines the elements of the set:

$$\{x \in S \colon P(x)\}$$

  is the set of all elements in S for which the property P is true.

Sets and Notations

Some common sets and their notations:

- Natural numbers
$$\mathbb{N} := \{0, 1, 2, 3, \dots\}$$
- Integers
$$\mathbb{Z} := \{\dots, -2, -1, 0, 1, 2, \dots\}$$
- Positive integers
$$\mathbb{Z}^+ := \{1, 2, 3, \dots\}$$

(The symbol $:=$ means that the symbol on the left is being defined by the symbol on the right.)

In particular,
$$\mathbb{Z}^+ \subseteq \mathbb{N} \subseteq \mathbb{Z}.$$

Sets and Notations

- Rational numbers

$$\mathbb{Q} := \{p/q : p, q \in \mathbb{Z} \text{ and } q \neq 0\}$$

Examples:

$$\underbrace{\frac{1}{2}, \frac{2}{4}}_{\text{same element}}, \frac{3}{2}, \underbrace{\frac{-3}{2}, \frac{3}{-2}}_{\text{same element}}, \underbrace{\frac{2}{1}, \frac{3}{-1}}_{\text{integers}}, \ldots$$

- Real numbers

$$\mathbb{R}$$

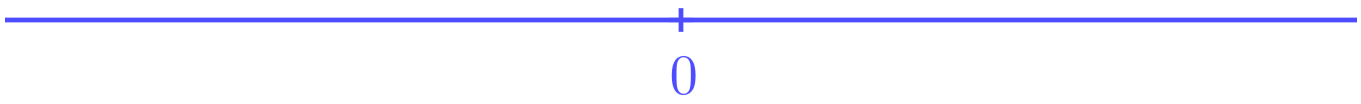

Examples:

$$\text{all integers}, \quad \text{all rational numbers}, \sqrt{2}, \sqrt{3}, \pi$$

Sets and Notations

- $[a, b] := \{x \in \mathbb{R} : a \leq x \leq b\}$
- $(a, b) := \{x \in \mathbb{R} : a < x < b\}$
- $(a, b] := \{x \in \mathbb{R} : a < x \leq b\}$
- $[a, \infty) := \{x \in \mathbb{R} : a \leq x\}$
- The empty set $\emptyset$, i.e. $\emptyset = \{\ \}$

Example 0.1

(a) $\{x \in \mathbb{N} : x^2 - 1 = 0\} = \{1\}$ since the solutions of $x^2 - 1 = 0$ are $x = 1$ and $x = -1$, among which only $x = 1$ is a natural number.

(b) The set of all positive even numbers $= \{2, 4, 6, \dots\}$ can be written as

$$\{n \in \mathbb{Z}^+ : n = 2m, \text{ for some } m \in \mathbb{Z}^+\} \quad \text{or} \quad \{2m : m \in \mathbb{Z}^+\}.$$

(c) The set of all positive odd numbers $= \{1, 3, 5, \dots\}$ can be written as

$$\{n \in \mathbb{Z}^+ : n = 2m - 1, \text{ for some } m \in \mathbb{Z}^+\} \quad \text{or} \quad \{2m - 1 : m \in \mathbb{Z}^+\}.$$

Set Operations

Let A, B be two sets.

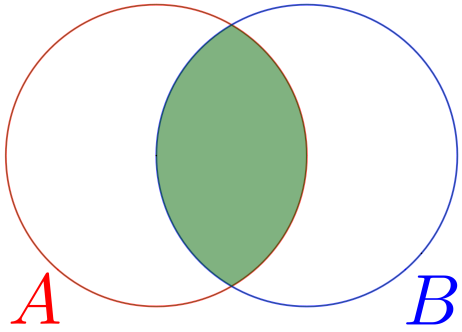

Intersection: $A \cap B$

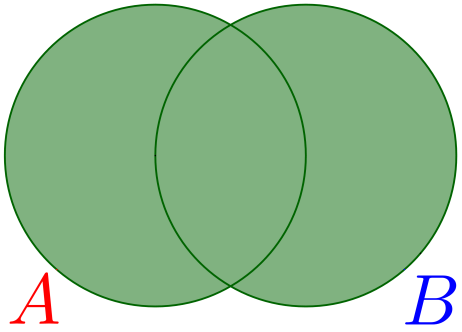

Union: $A \cup B$

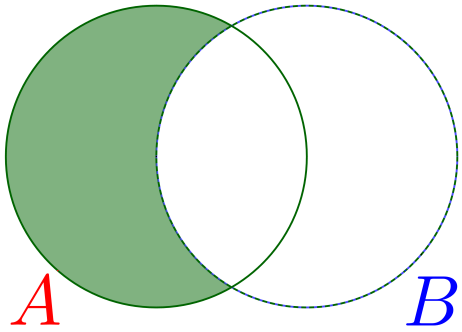

Relative complement of B in A: $A \backslash B$

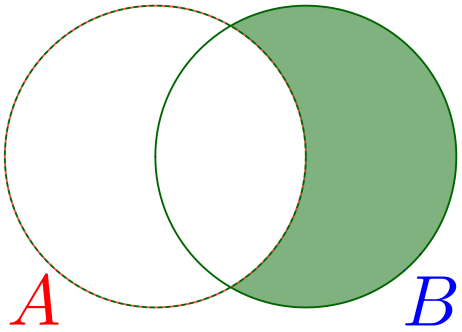

Relative complement of A in B: $B \backslash A$

Example 0.2

Let $A = \{1, 2\}$, $B = \{2, 3\}$, $C = \{3\}$.

- $A \cap B = \{2\}, \qquad A \cap C = \emptyset$
- $A \cup B = \{1, 2, 3\}$
- $A \backslash B = \{1\}, \qquad B \backslash A = \{3\}$

Example 0.3

Set of all real numbers except 2: $\mathbb{R} \backslash \{2\}$
(Not $\mathbb{R} \backslash 2$ as 2 is not a set)

Example 0.4

The set $\{x \in \mathbb{R} : x^2 > 1\}$ can be written as

$$\{x \in \mathbb{R} : x > 1 \text{ or } x < -1\} \quad \text{or} \quad (-\infty, -1) \cup (1, \infty) \quad \text{or} \quad \mathbb{R} \backslash [-1, 1].$$

Some logic symbols:

- $\forall$: for all / for any / for every / given any
  Example:
  $$\forall\ n \in \mathbb{N}, n \in \mathbb{Z}$$
- $\exists$: there exists (at least one) / for some
  Example:
  $$\exists\ x \in \mathbb{Z} \text{ such that } x^2 - 1 = 0$$
- $\exists!$: there exists unique / there exists exactly one
  Example:
  $$\exists!\ x \in \mathbb{R} \text{ such that } x^2 - 2x + 1 = 0$$
- $\implies$: implies
  Example:
  $$x > 1 \implies x^2 > 1$$
- $\iff$: if and only if (shortened form iff) / is logically equivalent to
  Example:
  $$\text{In } \triangle ABC,\ \angle ABC = 90^\circ \iff AB^2 + BC^2 = AC^2$$

Example 0.5

The statement

$$\forall\, x \in \mathbb{Z}, \exists\, y \in \mathbb{Z}, x + y = 0 \tag{1}$$

can be read as

For every integer x, there exist an integer y such that $x + y = 0$.

Similarly the statement

$$\exists\, y \in \mathbb{Z}, \forall\, x \in \mathbb{Z}, x + y = 0 \tag{2}$$

can be read as

There exist an integer y such that for every integer x, $x + y = 0$.

These two statements are very different. For example, (1) is true while (2) is false.

Functions

- A function is a rule that assigns to **each** element in a set A **exactly one** element in a set B.

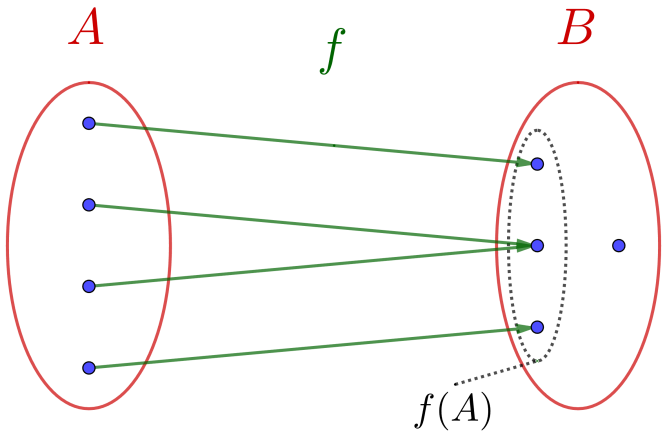

- If $b = f(a)$, we refer to b as the **value** of f at a, or the **image** of a under f.
- The set A is called the **domain**, the set B is called the **codomain** of the function.
- The **range** of f, $f(A)$ (or range(f)), is defined by

$$f(A) := \{f(x) \in B : x \in A\}.$$

- A function f from A to B is denoted by $f : A \to B$. We also say that f **maps** A into B.

Example 0.6

(a) Let $f : \mathbb{R} \to \mathbb{R}$ be a function defined by $f(x) = x^2$ for all $x \in \mathbb{R}$. Then $\text{range}(f) = [0, \infty)$.

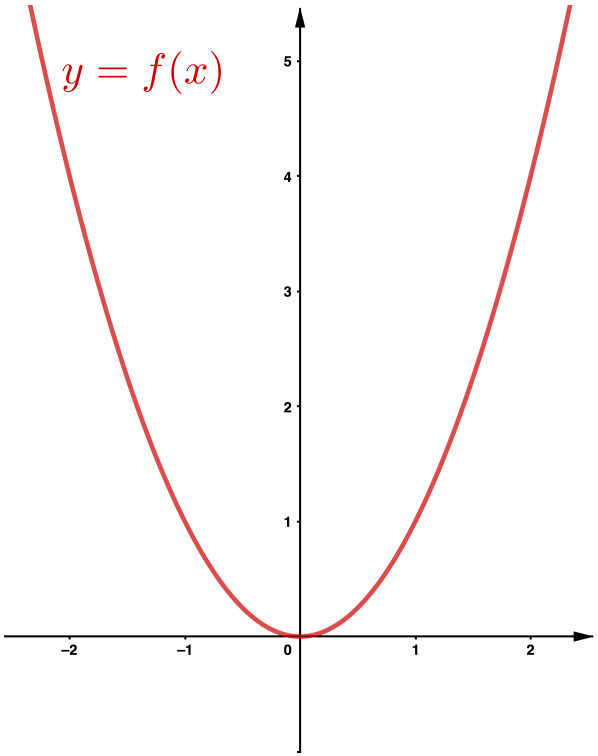

To show $\text{range}(f) = [0, \infty)$, we need to verify

- $\text{range}(f) \subseteq [0, \infty)$
  Reason: $\forall x \in \mathbb{R}, f(x) = x^2 \geq 0$

- $[0, \infty) \subseteq \text{range}(f)$
  Reason: $\forall y \in [0, \infty), x := \sqrt{y} \in \mathbb{R}$ satisfies $f(x) = (\sqrt{y})^2 = y$

Example 0.6

(a) Let $f : \mathbb{R} \to \mathbb{R}$ be a function defined by $f(x) = x^2$ for all $x \in \mathbb{R}$. Then $\text{range}(f) = [0, \infty)$.

(b) If we change the domain and define another function $g : [-1, 2) \to \mathbb{R}$ by $g(x) = x^2$ for all $x \in \mathbb{R}$. Then $\text{range}(g) = [0, 4)$.

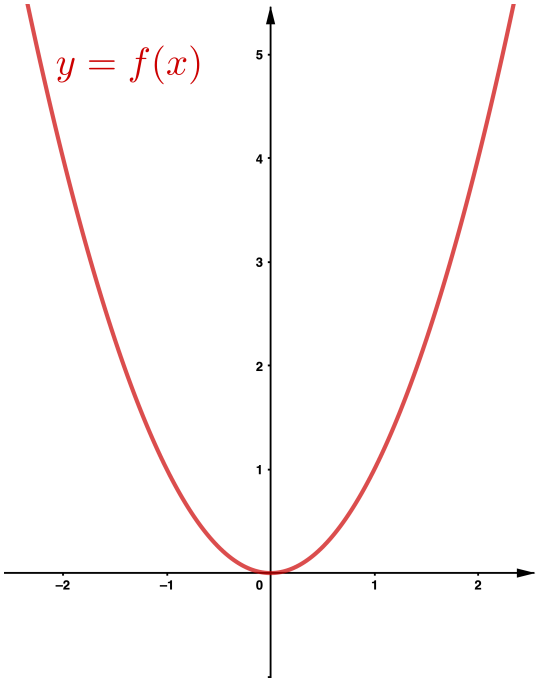

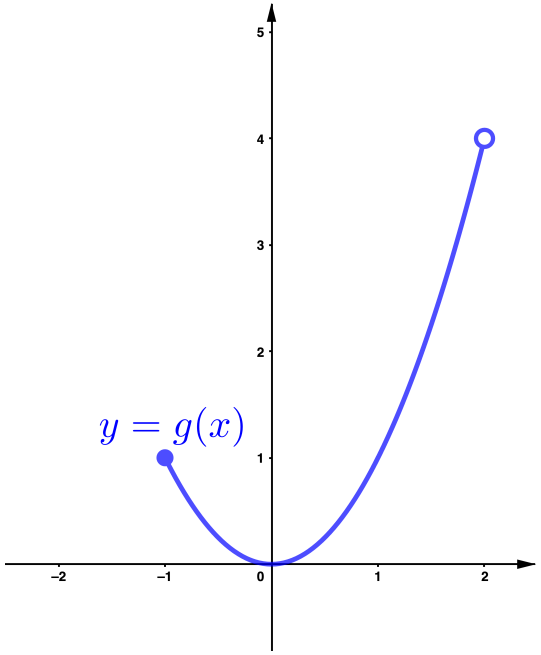

Note: Even f and g are defined by the same formula, they are two different functions.

Example 0.7 (Piecewise defined function)

Consider the function $f : \mathbb{R} \to \mathbb{R}$ defined by

$$f(x) = \begin{cases} x + 1 & \text{if } x \geq 2 \\ 3 - x & \text{if } x < 2. \end{cases}$$

Note that $f(2) = 2 + 1 = 3 \neq 3 - 2 = 1$.

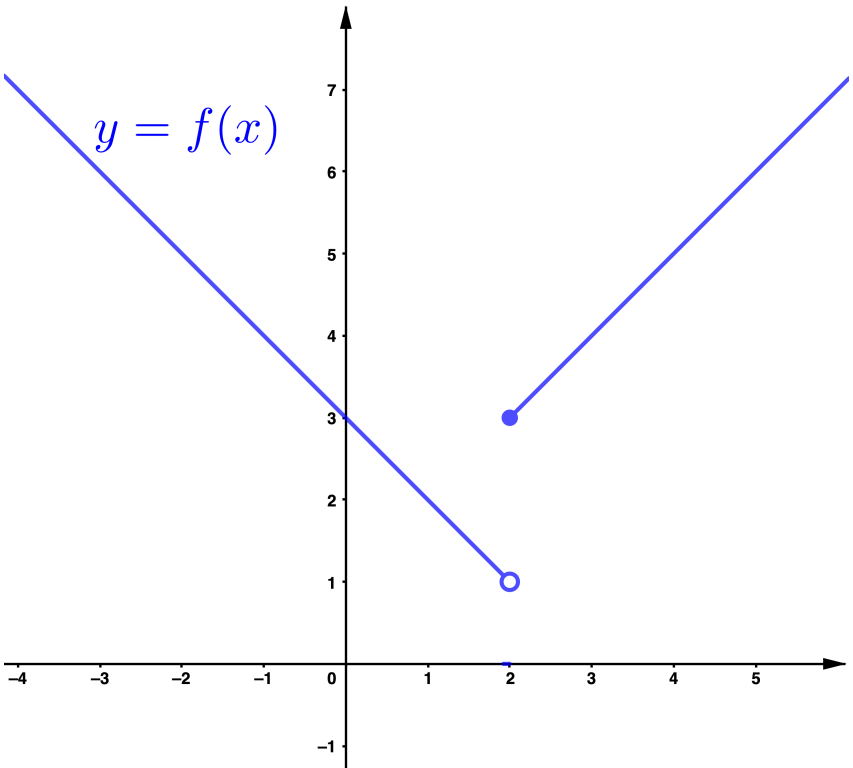

Definition 0.1 (Injective, Surjective and Bijective Functions)

Let $f : A \to B$ be a function from A to B.

(i) f is said to be **injective** if

$$\text{for all } x_1, x_2 \in A, \text{ if } f(x_1) = f(x_2), \text{ then } x_1 = x_2.$$

(ii) f is said to be **surjective** if

$$\text{for any } y \in B, \text{ there exists } x \in A \text{ such that } f(x) = y$$
$$(\text{i.e. } f(A) = B).$$

(iii) If f is both injective and surjective, then f is said to be **bijective**.

Injective and Surjective Functions

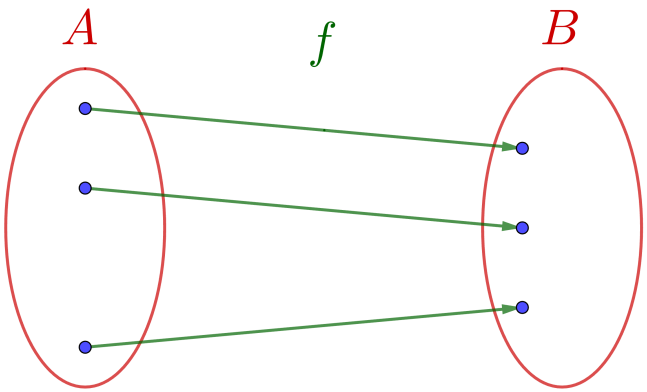

both injective and surjective

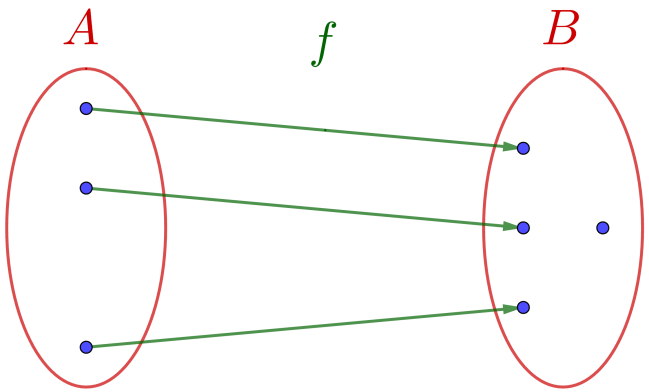

injective but not surjective

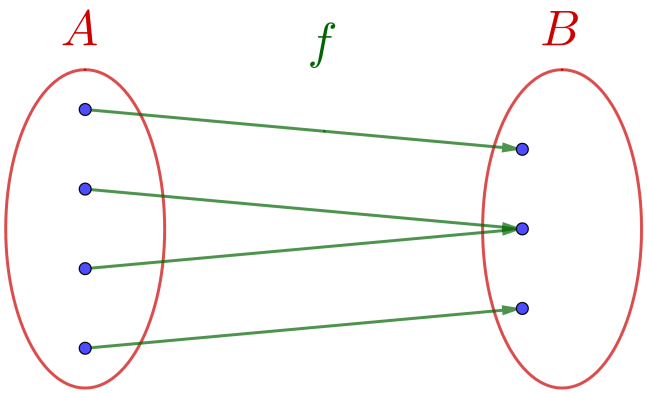

surjective but not injective

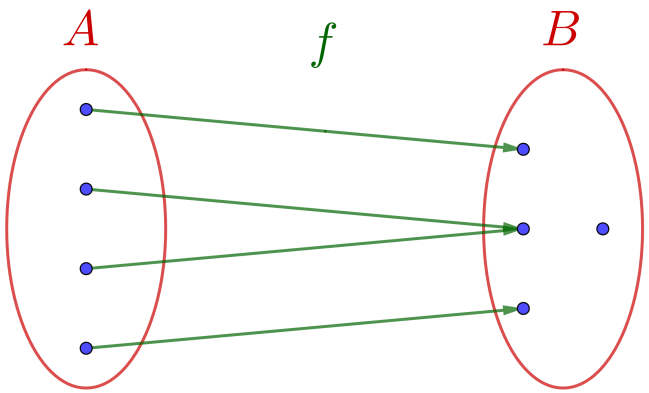

neither injective nor surjective

Example 0.8

Functions		Injective	Surjective
$f : \mathbb{R} \to \mathbb{R}$	$f(x) = \sin x$	NO	NO
$g : \mathbb{R} \to [-1, 1]$	$g(x) = \sin x$	NO	YES
$h : [-\frac{\pi}{2}, \frac{\pi}{2}] \to [-1, 1]$	$h(x) = \sin x$	YES	YES

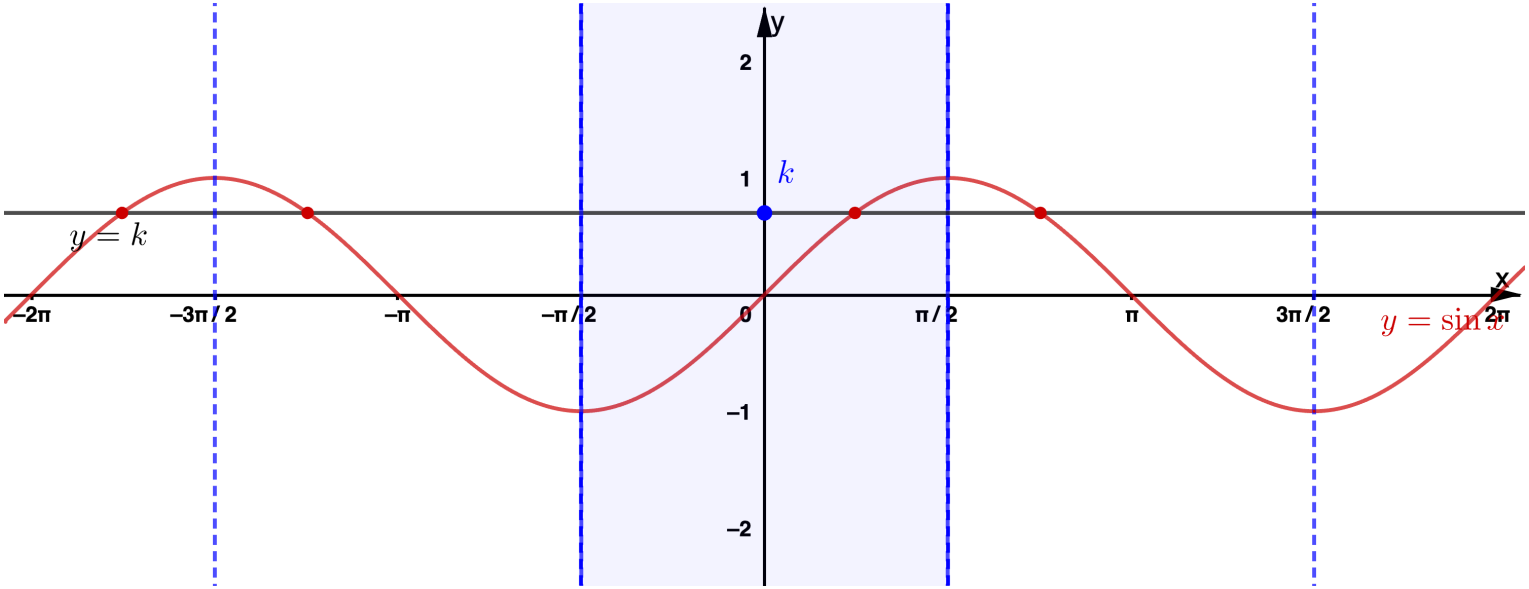

Definition 0.2 (Inverse of a Function)

Let $f : A \to B$ be a function. Suppose $g : B \to A$ is a function satisfying

(i) $g(f(x)) = x$ for all $x \in A$, and

(ii) $f(g(y)) = y$ for all $y \in B$.

Then g is said to be an **inverse** of f.

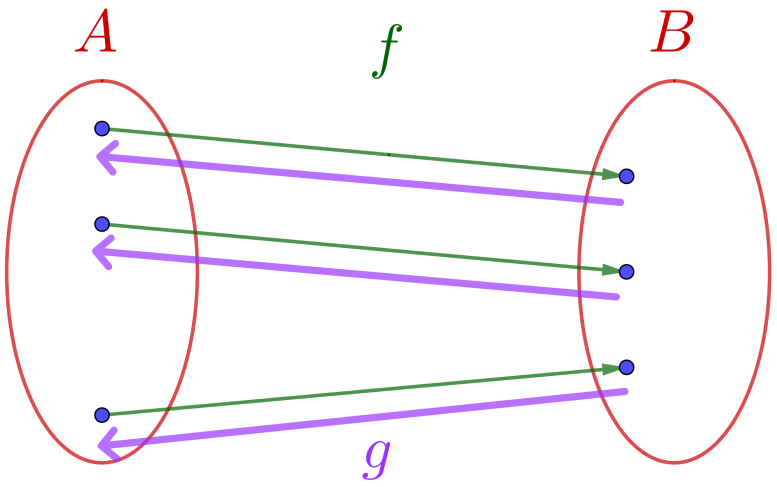

Fact:

1. Once an inverse of f exists, it is unique, so we denote it by f^{-1}.
2. f has an inverse if and only if f is bijective.

Example 0.9

Let $f : \mathbb{R} \to (0, \infty)$ be defined by $f(x) = e^x$.
Then f is bijective, so f^{-1} exists and it is denoted by $f^{-1}(x) = \ln x$.
We have

- $f^{-1}(f(x)) = \ln(e^x) = x \quad \forall\, x \in \mathbb{R}$;
- $f(f^{-1}(y)) = e^{\ln y} = y \quad \forall\, y \in (0, \infty)$.

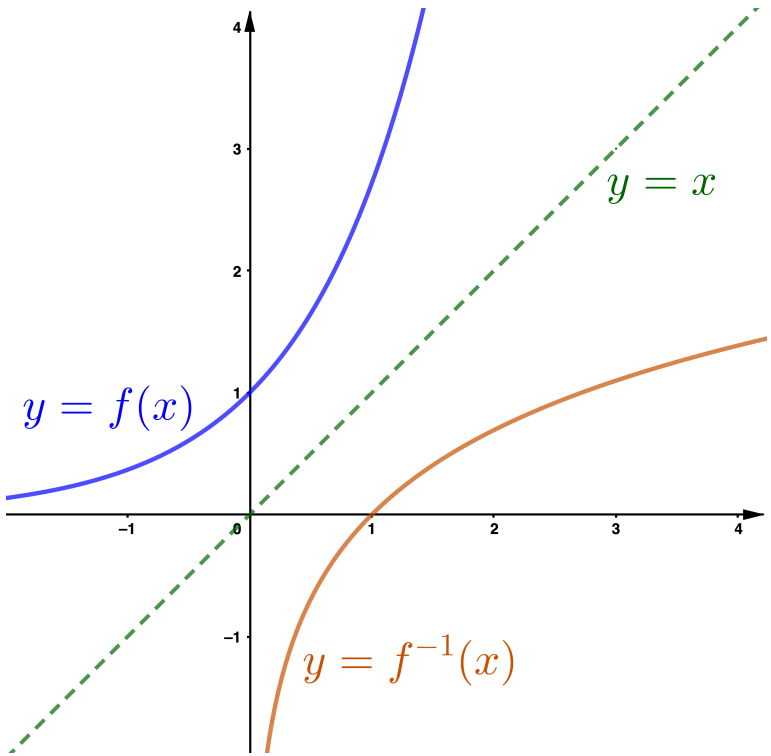

Example 0.10

Show that $f : (0, \infty) \to (1, \infty)$ defined by $f(x) = 2x^3 + 1$ is a bijective function. Find its inverse.

Injective:

$$
\begin{aligned}
& & f(x_1) &= f(x_2) \\
&\implies & 2x_1^3 + 1 &= 2x_2^3 + 1 \\
&\implies & x_1^3 - x_2^3 &= 0 \\
&\implies & (x_1 - x_2)(x_1^2 + x_1x_2 + x_2^2) &= 0 \\
&\implies & x_1 - x_2 = 0 \quad \text{or} \quad & \begin{array}{c} x_1^2 + x_1x_2 + x_2^2 = 0 \\ \text{(impossible since } x_1, x_2 > 0) \end{array} \\
&\implies & x_1 &= x_2
\end{aligned}
$$

Hence f is injective.

Example 0.11

Show that $f : (0, \infty) \to (1, \infty)$ defined by $f(x) = 2x^3 + 1$ is a bijective function. Find its inverse.

Surjective:

Let $y \in (1, \infty)$. Take $x = \sqrt[3]{\dfrac{y-1}{2}} \in (0, \infty)$. Then

$$\begin{aligned} f(x) &= f(\sqrt[3]{\frac{y-1}{2}}) \\ &= 2\left(\sqrt[3]{\frac{y-1}{2}}\right)^3 + 1 \\ &= 2\left(\frac{y-1}{2}\right) + 1 \\ &= y. \end{aligned}$$

Hence f is surjective.

The inverse of f is $f^{-1} : (1, \infty) \to (0, \infty)$ where $f^{-1}(y) = \sqrt[3]{\dfrac{y-1}{2}}$.

Summation and Product Symbols

Definition 0.3 (Summation Symbol)

Let m, n be integers such that $m \leq n$. Suppose $a_m, a_{m+1}, \ldots, a_n$ are numbers. Then we write

$$\sum_{i=m}^{n} a_i = a_m + a_{m+1} + \cdots + a_n.$$

Remark: The symbol i here is called the dummy index.

Example 0.12

(a) $\displaystyle\sum_{i=1}^{n} i^2 = 1^2 + 2^2 + \cdots + n^2$

(b) $\displaystyle\sum_{i=0}^{10} 2^i = 1 + 2 + 2^2 + \cdots + 2^{10}$

(c) $\displaystyle\sum_{k=0}^{50} (-1)^k (2k+1) = \underbrace{1 - 3 + 5 - 7 + \cdots - 99 + 101}_{\text{alternating } +,\ -}$

Summation and Product Symbols

Theorem 0.1 (Some basic properties of the summation symbol)

(1) $$\sum_{i=m}^{n} C \cdot a_i = C \cdot \sum_{i=m}^{n} a_i$$

(2) $$\sum_{i=m}^{n} (a_i \pm b_i) = \left(\sum_{i=m}^{n} a_i \right) \pm \left(\sum_{i=m}^{n} b_i \right)$$

(3) $$\sum_{i=m}^{n} a_i = \sum_{i=m+s}^{n+s} a_{i-s} \qquad \textit{(shift of index)}$$

(4) $$\left(\sum_{i=m}^{n} a_i \right) \left(\sum_{j=p}^{q} b_j \right) = \sum_{i=m}^{n} \sum_{j=p}^{q} a_i b_j = \sum_{j=p}^{q} \sum_{i=m}^{n} a_i b_j$$

Example 0.13 (Telescoping method)

Simplify $\sum_{i=1}^{n} \frac{1}{k(k+1)}$.

$$
\begin{aligned}
\sum_{i=1}^{n} \frac{1}{k(k+1)} &= \sum_{k=1}^{n} \left(\frac{1}{k} - \frac{1}{k+1} \right) \\
&= \sum_{k=1}^{n} \frac{1}{k} - \sum_{k=1}^{n} \frac{1}{k+1} \\
&= \sum_{k=1}^{n} \frac{1}{k} - \sum_{k=2}^{n+1} \frac{1}{k} \\
&= \left(\frac{1}{1} + \sum_{i=2}^{n} \frac{1}{k} \right) - \left(\sum_{k=2}^{n} \frac{1}{k} + \frac{1}{n+1} \right) \\
&= 1 - \frac{1}{n+1}.
\end{aligned}
$$

Definition 0.4 (Product Symbol)

Let m, n be integers such that $m \leq n$. Suppose $a_m, a_{m+1}, \ldots, a_n$ are numbers. Then we write

$$\prod_{i=m}^{n} a_i = a_m \times a_{m+1} \times \cdots \times a_n.$$

Example 0.14

(a) $\displaystyle\prod_{i=1}^{n} i = 1 \cdot 2 \cdots n = n!$

(b) $\displaystyle\sum_{i=1}^{n} 2^i = 2^1 \cdot 2^2 \cdots 2^n = 2^{1+2+\cdots+n} = 2^{\left(\sum_{i=1}^{n} i\right)} = 2^{\frac{n(n+1)}{2}}$

(c) $\displaystyle\sum_{i=1}^{n} \log(i) = \log 1 + \log 2 + \cdots + \log n = \log(1 \cdot 2 \cdots n) = \log\left(\prod_{i=1}^{n} i\right)$