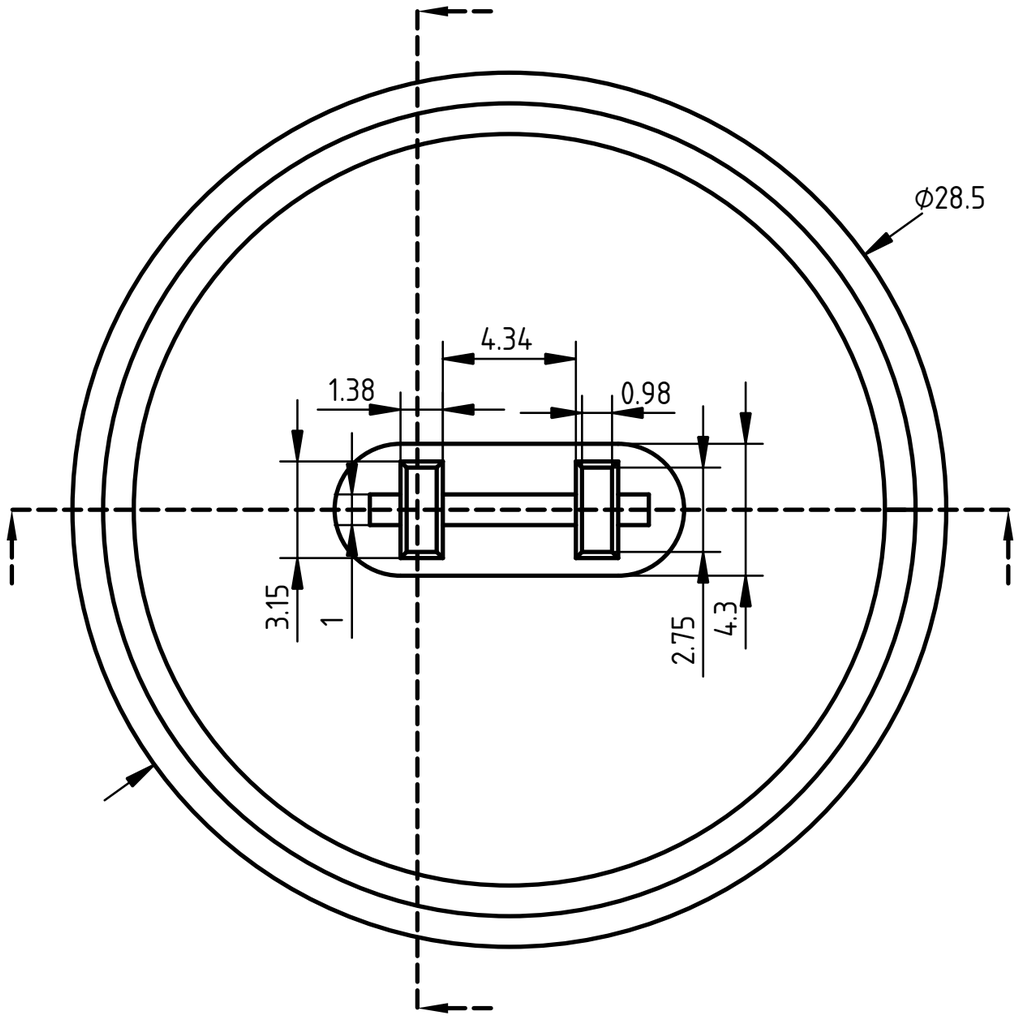

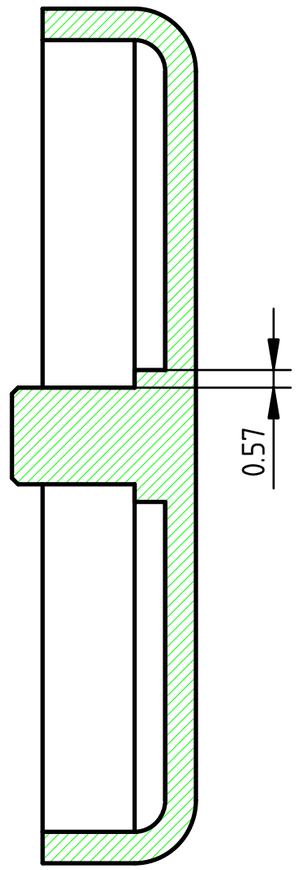

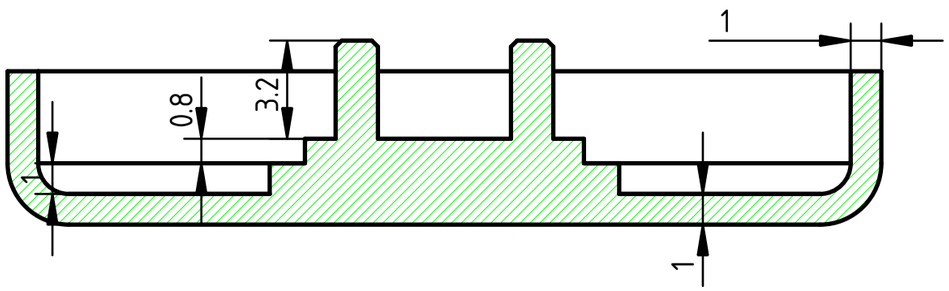

AUTHOR NAME : mizma		**Flatbox ACR** Button Cap Big	
DATE : 2022-07-23			
SUPERVISOR NAME : –			
DATE : –			
FORMAT : A3		COMPANY : –	
SCALE : 5:1	WEIGHT (kg) : –	VERSION : rev 1	SHEET : 1/1
COPYRIGHT			

I	
H	
G	
F	
E	
D	
C	
B	
A	