NUC Power Supply

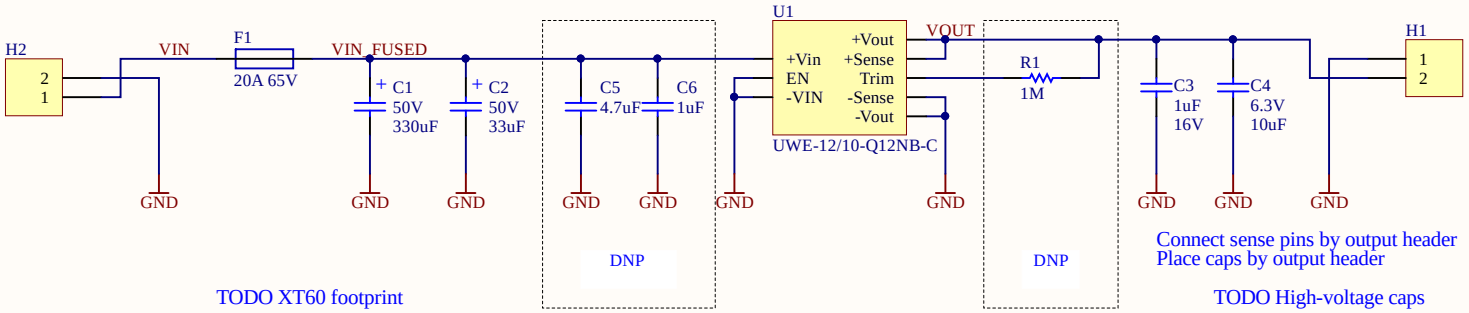

TODO XT60 footprint

Connect sense pins by output header
Place caps by output header

TODO High-voltage caps

FUSE FOR 3S
Max current is with 10V input and 10A output.
Approx 90% efficiency gives 13.3A.
Brick datasheet says to rate for twice the full current at the nominal input voltage, so that would be a 25-30A fast blow fuse.
FUSE FOR 4S
Max current is with 13V input and 10A output.
Approx 90% efficiency gives 10.3A, which would be a 20A fuse.
20A fuses are a bit easier to source, so let's call it a 20A fast blow fuse with max 36V.

CAPACITORS
Recommended capacitors are input 33uF, output 1uF // 10uF, ESR < 700mR @ 100kHz.

NOTE
Using an isolated DC-DC converter and connecting the two grounds together is silly but not harmful. I can't find any PoL coverters that do 9-36V in and 12V out.

TRIM
1% up (12.12V) is 4492.7kR
2.5% up (12.3V) is 1820.7kR.
5% up (12.6V) is 930.1kR.
1M resistors probably make sense.

Temp coeff must be 100ppm/C or less.

Title *NUC Power Supply*		*ECE Department* *University of Canterbury* *Christchurch 8041* *New Zealand*
Drawn by Matthew Edwards	Revision: 1	
Date: 30/01/2019 Time: 2:25:05 PM	Sheet 1 of 1	
File: C:\Working\nuc_power\NUC_power.SchDoc		

UNIVERSITY OF CANTERBURY
Te Whare Wānanga o Waitaha