Connections are different from v1/v2.1

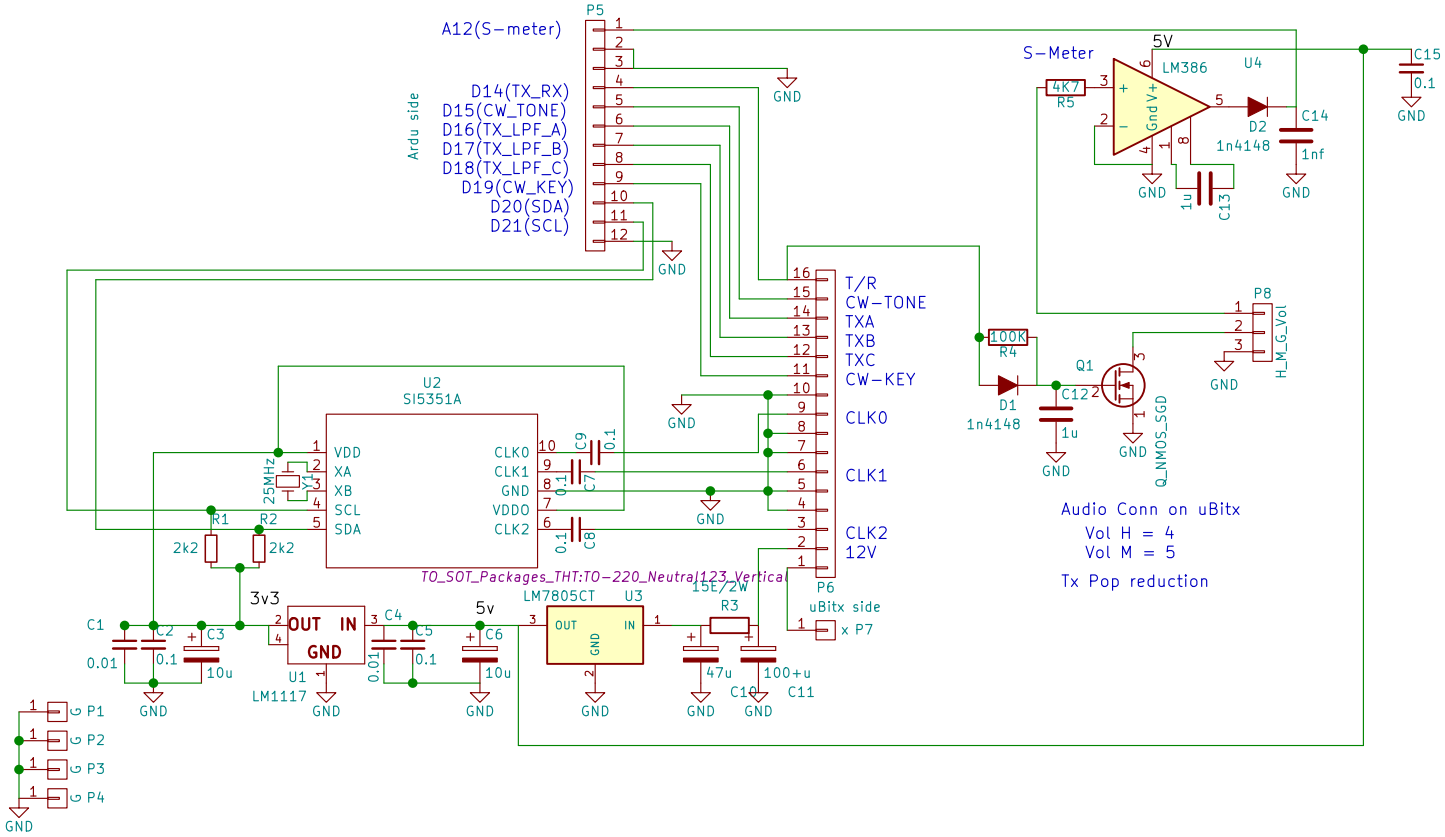

P1 diff from v1
P1 on Arduino -chk connections
P2 on uBitx
VU2SPF

Sheet: /
File: arduMega5351uBitx.sch

Title: 5351 Piggyback board for uBitx with Ardu Mega TFT

Size: A4	Date: 2018-07-14	**Rev: 2.3**
KiCad E.D.A. kicad 4.0.2+dfsg1-stable		Id: 1/1