ESTE DOCUMENTO ES PROPIEDAD DE REPSOL, NO PUEDE SER COPIADO, REPRODUCIDO Y / O USADO SIN PREVIA AUTORIZACIÓN DE REPSOL. PLANO INFORMATIZADO (NO REVISAR MANUALMENTE).
THIS DOCUMENT BELONGS TO REPSOL. IT CAN NOT BE COPIED, REPRODUCED AND/OR USED WITHOUT PREVIOUS AUTHORIZATION OF REPSOL. COMPUTERIZED DRAWING (HANDWRITING STRICTLY FORBIDEN).
© REPSOL, S.A. MADRID, Última Actualización /Last Issue 2012-2016

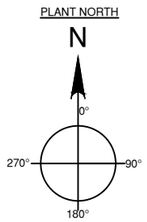

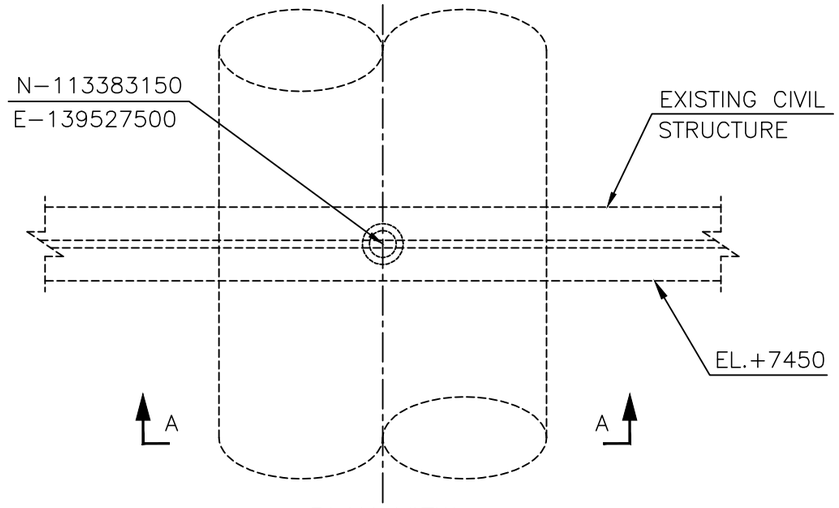

PLAN VIEW

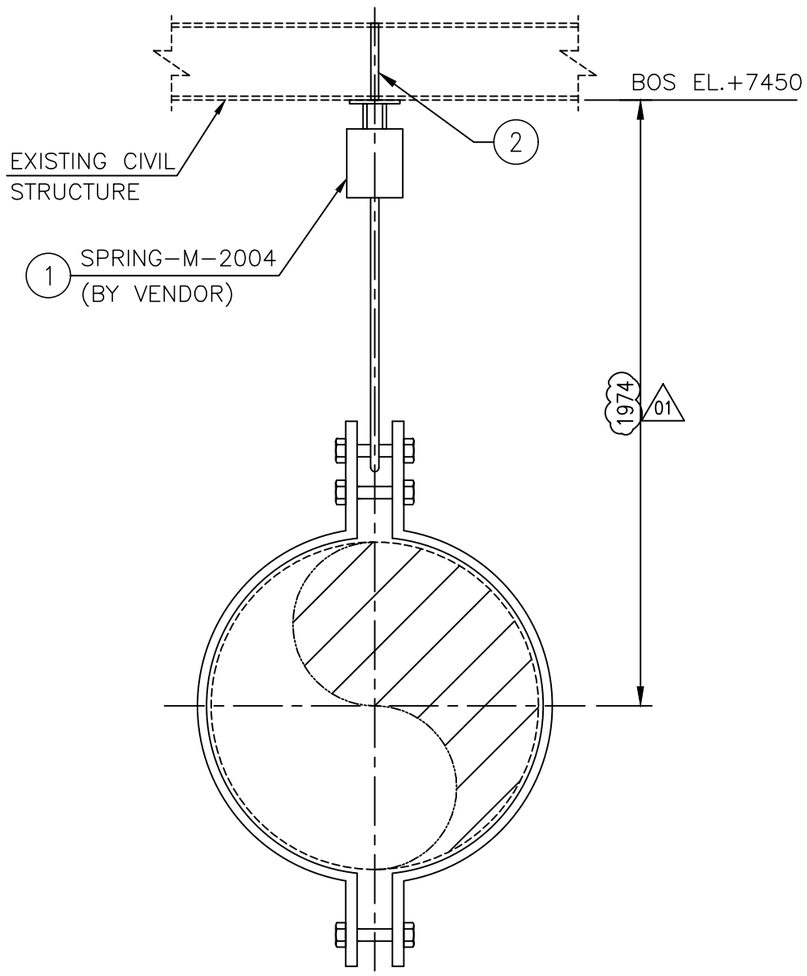

VIEW A-A

BILL OF MATERIAL

SR.NO.	DESCRIPTION	QTY.	WIEGHT (Kg.)
1	SPRING, BY VENDOR	1	–
2	PLATE (210*526*10)	1	8.67

"*" SUPPORT HEIGHT TO BE ADJUSTED AS PER SITE CONDITION.

NOTES:

1. ALL DIMENSIONS ARE IN MILLIMETER.
2. FULLY INSULATED TRUNION (SUPPORT) INSULATION SHALL COVER THE ENTIRE TRUNION UP TO THE BASE PLATE A PER THE DRAWING. TRUNION AND CLOSURE PLATE SHALL HAVE THE SAME INSULATION MATERIAL AND THICKNESS OF THE RUN PIPE.
3. ALL FILLET WELDS SHALL BE GROUND TO SMOOTH CONCAVE CONTOUR.
4. SUPPORT WELDING SHALL BE IN ACCORDANCE WITH DOC. 4274-XH-SW-00000001
5. WELDED JOINTS USED FOR FABRICATION OF SUPPORT SHALL HAVE CONTINUOUS SEAM EXAMINED BY LIQUID PENETRANT TEST ON 100% OF JOINTS.
6. PIPING LONGITUDINAL WELD SHALL BE ORIENTED TO AVOID INTERFERENCE WITH SUPPORT WELDINGS.
7. THE DRAWING REVISION INDEX SHOWN IN TITLE BLOCK IS REFERRED TO THIS SUPPORTS ONLY. FOR THIS WHOLE DOCUMENT REVISION REFER TO THE COVER PAGES.

APPROVED FOR CONSTRUCTION		
Date	Initials	Signature
28-Nov-23	E.Simonito	

UNIT : 2120	LINE NO.: 42"CYG-40C05-1E22(P)	
CWA : 2121	SP NO.: SP-005	SUPPORT NO.: 5010

ATTACHMENT SP-005 OF BELOW DOCUMENT

REV. REV.	DESCRIPCIÓN DESCRIPTION	FECHA DATE	REALIZ. PREP.	COMPR. CHCK.	APROB. APPROV.	V'B' CLIENTE CLIENT APPROVAL
01	ISSUED FOR CONSTRUCTION	28-Nov-23	M.AZHAR	H.JADHAV	G.PAGANONI	
00	ISSUED FOR CONSTRUCTION	25-May-23	M.AZHAR	H.JADHAV	G.PAGANONI	

REALIZADO PREPARED	28-Nov-23	M.AZHAR	
COMPROB. CHECKED	28-Nov-23	H.JADHAV	
APROBADO APPROVED	28-Nov-23	G.PAGANONI	
V'B' CLIENTE CLIENT APPROVAL			

ESCALA: SCALE: 1:25

CONTRATISTA: CONTRACTOR: 4274-XH-DC-21210001

TAMAÑO: SIZE: DIN-A3

PROYECTO: PROJECT: 4001008

TÍTULO: TITLE: *PIPE SPECIAL SUPPORT DRAWING*

REPSOL Tecnimont

NEGOCIO: BUSINESS: REPSOL POLYMEROS

CENTRO: FACILITY: SINES INDUSTRIAL COMPLEX

ÁREA/ANEXO: AREA/ANNEX:	CLASIF.: CLASIF.:	PLANO Nº: DRAWING NUMBER:	REV.:
19	L	19-000-2-03-85121	01

4274-XH-DC-21210001-SP-005.dwg