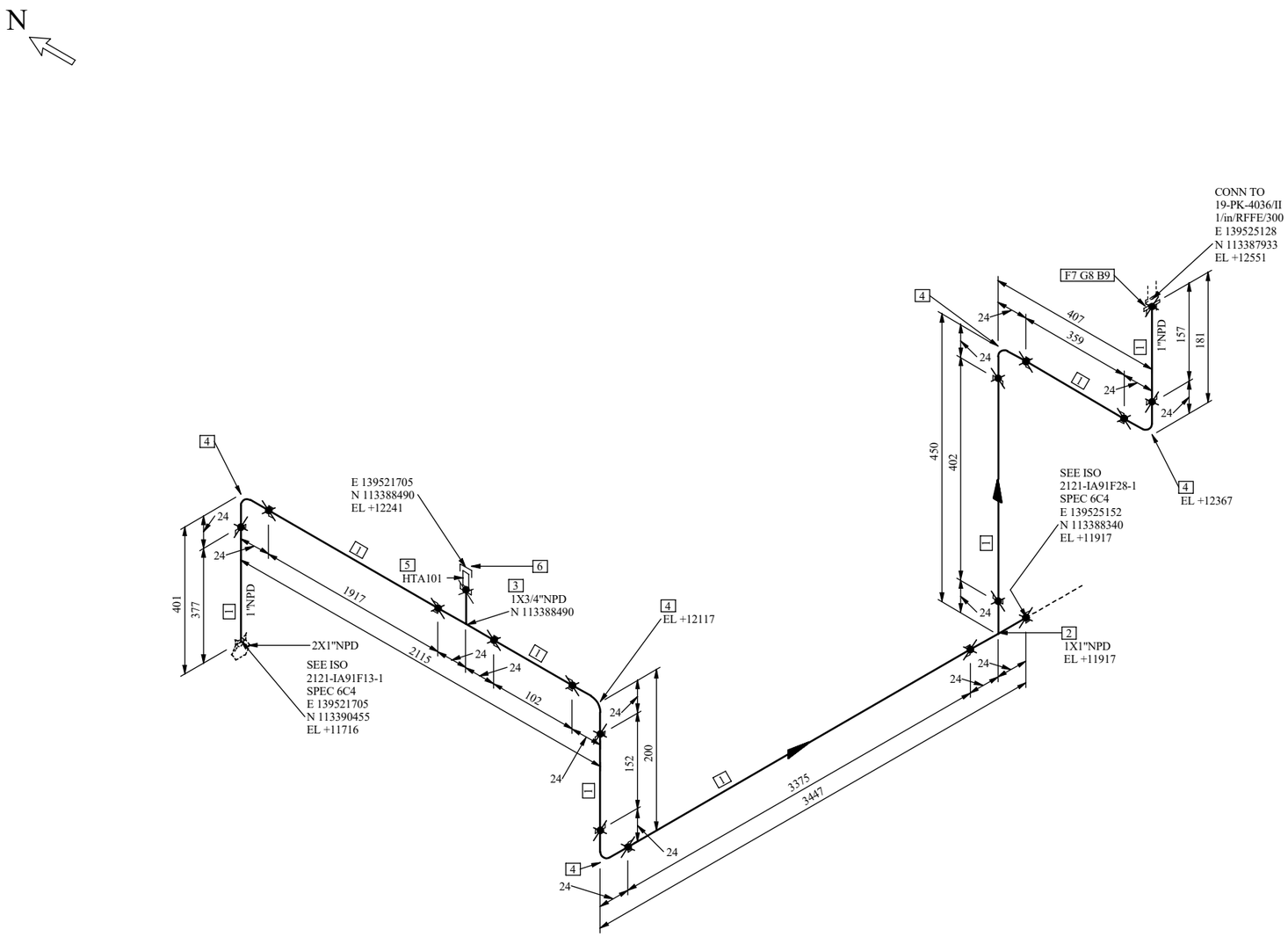

BILL OF MATERIAL

PT NO	COMPONENT DESCRIPTION	N.S. (IN)	ITEM CODE	QTY	HOLD STATUS
PIPE					
1	PIPE - A312-TP304/304L DUAL GR PE SMLS T01AL2CZ02 S-40S <PIPB04DA2140S> (L-PIP111)	1	I2257939	6.9 M	
FITTINGS					
2	TEE ASME B16.11 3000# A182-F304/304L DUAL GR SWE SWE - R11FNL2A1101 NREQD <TESB450LBK1> (L-TES04)	1X1	I2258184	1	
3	REDUCING TEE ASME B16.11 3000# A182-F304/304L DUAL GR SWE SWE - R12FNL2A1101 NREQD <RTEB450LBK13/4> (L-RTE18)	1X3/4	I2258205	1	
4	90 ELBOW ASME B16.11 3000# A182-F304/304L DUAL GR SWE SWE - R31FNL2A1103 NREQD <90FB450LBK1> (L-90F05)	1	I2258117	5	
5	NIPPLE - - A312-TP304/304L DUAL GR PE MTE SMLS LENGTH 100mm R03AQL2CZW04 S-80S <NTOB04DE2110424> (L-NTO09)	3/4	I2258068	1	
6	CAP ASME B16.11 3000# A182-F304/304L DUAL GR FTE NREQD - R41FNL2A2001 NREQD <CATB450KBK3/4> (L-CAT04)	3/4	I2259129	1	
FLANGES					
7	SW FLANGE ASME B16.5 300# A182-F304/304L DUAL GR RFFE SWE 125 - 250 AARH F02CFL2AB105 S-40S <SWFB450R35140S> (L-SWF34)	1	I2498682	1	
GASKETS					
8	SPIRAL WOUND GASKET ASME B16.20 300# RFTBE 304/GRAFOIL SS 304 SS 304 ASME B16.5 G03GFP1IS04 <N/A> (N/A)	1	I1168999	1	
BOLTS					
9	STUD BOLTS&NUTS ASME B18.31.2/ B18.2.2 A193-B8M CL2/A194-8MA INCH SIZE I01OB1601 <SB2R58G5/831/4> - 2 NUTS PER BOLT - 80 mm Length	5/8	I53458365	4	

REMARKS FOR MECHANICAL SUBCONTRACTOR:

1) LINES 1.1/2" AND SMALLER SHALL BE SUPPORTED IN FIELD IF NOT OTHERWISE INDICATED.
2) ALL DIMENSION AND PROPER CONFIGURATION FOR LINES NPS 1.1/2" AND SMALLER SHALL BE CHECKED IN FIELD BEFORE CONSTRUCTION.
3) FOR THE COMPONENTS MARKED AS FIELD WELDED WITH THIS SYMBOL ✕ , ONE WELD FOR ADJUSTMENT OF IN LINE COMPONENT MUST BE LEFT
4) FOR EXTRA PIPE LENGTH REFER TO 4274-LZ-PC-00000603.
5) GUSSETING TO BE IMPLEMENTED BY MECHANICAL SUBCONTRACTOR AS PER 45-L-45-000-2-00-80004 / 4274-XH-SG-00000002.
6) CROSSING BETWEEN WELDS ON PIPELINE SHALL NOT BE ALLOWED.
7) IN CASE OF DISCREPANCIES BETWEEN DATA SHOWN ON ISO AND IN LINE LIST (AS APPLICABLE, DATA SHOWN IN LINE LIST GOVERN.
8) ACTUAL CUT LENGTH OF PIPE AND FIELD WELDS SHALL BE DEFINED BY MECHANICAL SUBCONTRACTOR (REF.TO 4274-LZ-PC-00000603).
9) WHERE EARTHING BONDING IS REQUIRED, MECHANICAL SUBCONTRACTOR TO PERFORM IT BASED ON DOC. 45-P-000-7-06-00902/ 4274 -NN-DW-00000002 AND ASSEMBLY NO FEA005 AND FE019.

SUPPORTS LEGEND: [1] DENOTES PARTS LIST NO — PIPE SUPPORT — A = RESTING SUPPORT G = GUIDE F = AXIAL STOP B = ANCHOR M = SPRING S = TEFLON PAD
WHERE [A] WITHOUT NUMBERING IS INDICATED, THIS MEANS THAT THERE IS A REST DIRECTLY ON STEEL STRUCTURE.

REV.	DESCRIPTION	DATE	DRW. BY	CHECK BY	APPR. BY	APPR. CLIENT
01	ISSUED FOR REFERENCE	23-FEB-24	M.YADAV	P.VAZE	G.PAGANONI	
00	ISSUED FOR REFERENCE	14-APR-23	U.CHAVAN	P.VAZE	G.PAGANONI	

STRESS CALC. Nº: -
P & ID: 19-A-19-000-1-01-00001 sheet 106
LINE LIST Nº: 19-L-19-000-2-00-80602
PIPE LAYOUT Nº: 19-L-19-000-2-00-86196 sheet 4

ISSUED FOR REFERENCE

Signature for construction is shown on Iso list of relevant CWA

TITLE

ISOMETRIC DRAWING LINE

1"-IA-91F29-6C4

PIPE MATERIAL: 304, dual grade
HEAT TREATMENT (PWHT): N
PAINTING SCHEME (3): NR
PIPING CLASS: 6C4
WELDING CLASS (4): M
PED CATEGORY: Art 4.3
INSULATION CODE / THK. (mm): N 0

NOTES:
1. FOR TECHNICAL DETAILS SEE LINE LIST.
2. FOR VENT, DRAIN OR INSTRUMENT CONNECTION DETAILS SEE 45-L-45-000-2-00-80102.
3. WELDING ACCORDING TO 45-L-45-000-2-00-80021.
4. PAINTING ACCORDING TO 45-A-45-000-1-00-20160.
5. CODE SHOWN IN BOM BETWEEN "<" & ">" DENOTES REPSOL UNICODE. "<N/A>" MEANS UNICODE IS "NOT AVAILABLE".

CONTRACTOR: Tecnimont
CONTRACTOR DRAWING NUMBER: 4274-XH-DL-2121IA91F29-1
PROJECT: 4001008

REPSOL
LOW LINEAL DENSITY POLYETHILENE (PEL) AND POLYPROPYLENE (PP) PLANTS FOR PROJECT - ALBA PROJECT
CLIENT / COMPLEX: REPSOL POLYMEROS/ SINES INDUSTRIAL COMPLEX

ANNEX: 19
SPEC.: L
DRAWING NUMBER: 19-000-2-02-00001 sheet 2121IA91F29-1
REV.: 01

FILENAME: 19-000-2-02-00001 sheet 2121IA91F29-1.dwg

THIS DOCUMENT BELONGS TO REPSOL. IT CAN NOT BE COPIED, REPRODUCED AND/OR USED WITHOUT PREVIOUS AUTHORIZATION OF REPSOL. COMPUTERIZED DRAWING (HANDWRITING STRICTLY FORBIDEN).

EXTR. DATE: 19-02-2024 21:22:56 STREAM NO.:3250 STREAM REV. NO. : 10 REV. CAUSE ID: 9