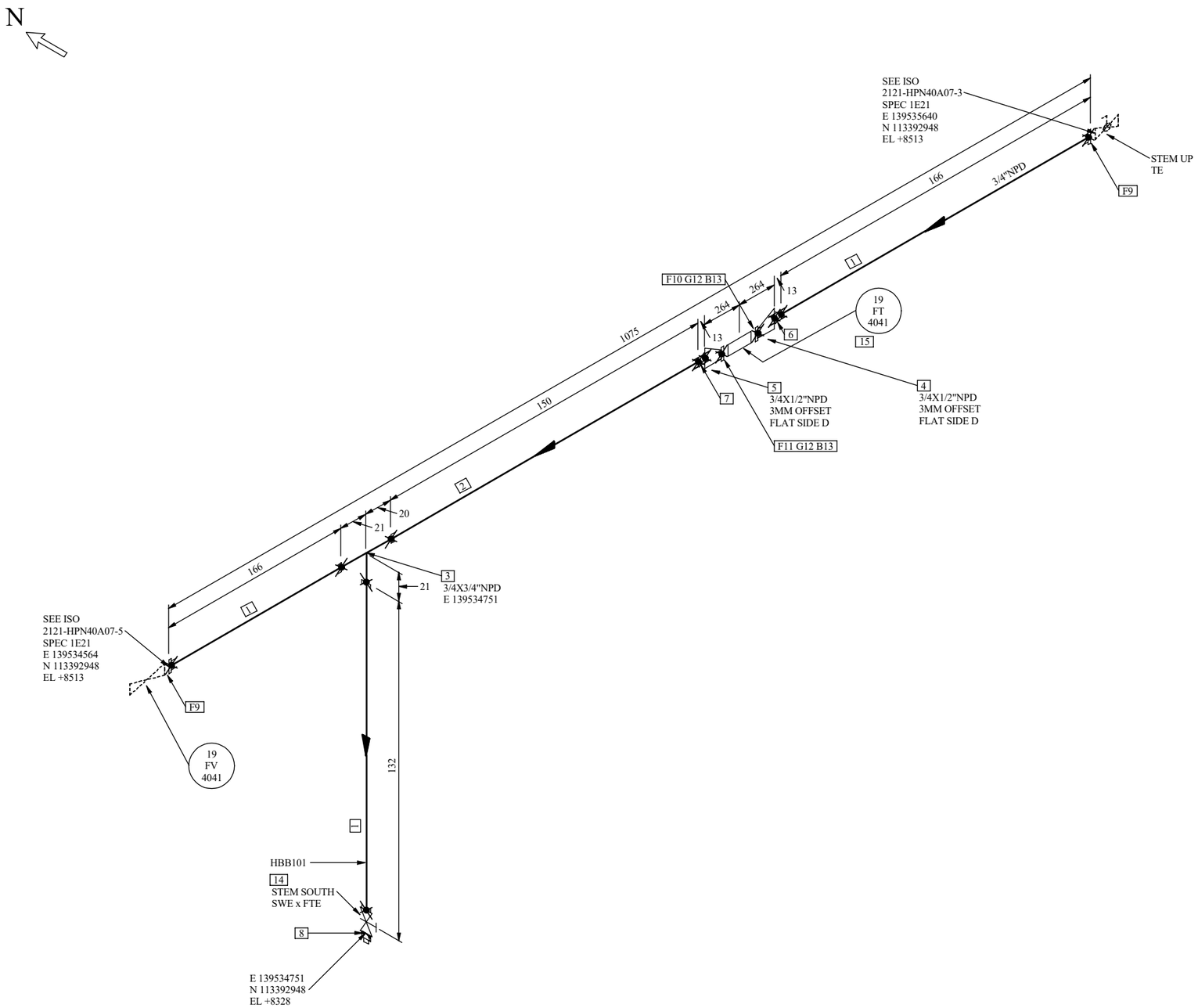

BILL OF MATERIAL

PT NO	COMPONENT DESCRIPTION	N.S. (IN)	ITEM CODE	QTY	HOLD STATUS
PIPE					
1	PIPE - A106-B PE SMLS T01AC03Z02 S-XS <PIPA010A13/4XS> (L-6679)	3/4	I132785	0.4 M	
2	PIPE - A106-B PE SMLS T01AC03Z02 S-XS <PIPA010A13/4XS> (L-6679).	3/4	I132785	0.2 M	
FITTINGS					
3	TEE ASME B16.11 3000# A105N SWE SWE - R11FNC441101 NREQD <TESA300LBK3/4> (L-179)	3/4X3/4	I1651300	1	
4	ECCENTRIC SWAGE MSS SP-95 - A105N PE PE SMLS SCH1-XS SCH2-XS R22FQC44ZZ01 <ESWA010AR11161016> (L-ESW31).	3/4X1/2	I63782592	1	
5	ECCENTRIC SWAGE MSS SP-95 - A105N PE PE SMLS SCH1-XS SCH2-XS R22FQC44ZZ01 <ESWA010AR11161016> (L-ESW31)	3/4X1/2	I63782592	1	
6	COUPLING ASME B16.11 3000# A105N SWE SWE - R01FNC441101 NREQD <FCPA300LBK3/4> (L-180).	3/4	I1651676	1	
7	COUPLING ASME B16.11 3000# A105N SWE SWE - R01FNC441101 NREQD <FCPA300LBK3/4> (L-180)	3/4	I1651676	1	
8	PLUG ROUND HEAD ASME B16.11 - A105N MTE NREQD - R42FQC44W001 NREQD <PLUA300CK3/4> (L-77)	3/4	I10088232	1	
FLANGES					
9	SW FLANGE ASME B16.5 300# A105N RFFE SWE 125 - 250 AARH F02CFC44B105 S-XS <SWFA300R353/4XS> (L-375)	3/4	I9762190	2	
10	SW FLANGE ASME B16.5 300# A105N RFFE SWE 125 - 250 AARH F02CFC44B105 S-XS <SWFA300R351/2XS> (L-375).	1/2	I9762189	1	
11	SW FLANGE ASME B16.5 300# A105N RFFE SWE 125 - 250 AARH F02CFC44B105 S-XS <SWFA300R351/2XS> (L-375)	1/2	I9762189	1	
GASKETS					
12	SPIRAL WOUND GASKET ASME B16.20 300# RFTBE 304/GRAFOIL CARBON STEEL SS 304 ASME B16.5 G03GFP1IS12 <N/A> (N/A)	1/2	I63508949	2	
BOLTS					
13	STUD BOLTS&NUTS ASME B18.31.2/ B18.2.2 A193-B7/A194-2H INCH SIZE I01OB0301 <SB2R51G1/221/2> - 2 NUTS PER BOLT - 65 mm Length	1/2	I53437190	8	
VALVES / IN-LINE ITEMS					
14	GATE VALVE API 602 800# A105N SWE FTE 8-F6&HF WB-OS&Y SOW API 602 HW V01GIC4412BL NREQD <N/A> (N/A)	3/4	I10015410	1	
INSTRUMENTS					
15	INSTRUMENT COMPONENT	1/2	19-FT-4041	1	

REMARKS FOR MECHANICAL SUBCONTRACTOR:

1) LINES 1.1/2" AND SMALLER SHALL BE SUPPORTED IN FIELD IF NOT OTHERWISE INDICATED.
2) ALL DIMENSION AND PROPER CONFIGURATION FOR LINES NPS 1.1/2" AND SMALLER SHALL BE CHECKED IN FIELD BEFORE CONSTRUCTION.
3) FOR THE COMPONENTS MARKED AS FIELD WELDED WITH THIS SYMBOL ✱ , ONE WELD FOR ADJUSTMENT OF IN LINE COMPONENT MUST BE LEFT
4) FOR EXTRA PIPE LENGTH REFER TO 4274-LZ-PC-00000603.
5) GUSSETING TO BE IMPLEMENTED BY MECHANICAL SUBCONTRACTOR AS PER 45-L-45-000-2-00-80004 / 4274-XH-SG-00000002.
6) CROSSING BETWEEN WELDS ON PIPELINE SHALL NOT BE ADMITTED.
7) IN CASE OF DISCREPANCIES BETWEEN DATA SHOWN ON ISO AND IN LINE LIST (AS APPLICABLE, DATA SHOWN IN LINE LIST GOVERN.
8) ACTUAL CUT LENGTH OF PIPE AND FIELD WELDS SHALL BE DEFINED BY MECHANICAL SUBCONTRACTOR (REF.TO 4274-LZ-PC-00000603).
9) WHERE EARTHING BONDING IS REQUIRED, MECHANICAL SUBCONTRACTOR TO PERFORM IT BASED ON DOC. 45-P-000-7-06-00902/ 4274 -NN-DW-00000002 AND ASSEMBLY NO FEA005 AND FE019.

SUPPORTS LEGEND: 1 DENOTES PARTS LIST NO — PIPE SUPPORT — A = RESTING SUPPORT G = GUIDE F = AXIAL STOP B = ANCHOR M = SPRING S = TEFLON PAD
WHERE A WITHOUT NUMBERING IS INDICATED, THIS MEANS THAT THERE IS A REST DIRECTLY ON STEEL STRUCTURE.

REV.	DESCRIPTION	DATE	DRW. BY	CHECK BY	APPR. BY	APPR. CLIENT
00	ISSUED FOR REFERENCE	21-JUL-23	U.CHAVAN	P.VAZE	G.PAGANONI	

STRESS CALC. Nº: -
P & ID: 19-A-19-000-1-01-00001 sheet 28
LINE LIST Nº: 19-L-19-000-2-00-80602
PIPE LAYOUT Nº: 19-L-19-000-2-00-86197 sheet 3

ISSUED FOR REFERENCE

Signature for construction is shown on Iso list of relevant CWA

TITLE

ISOMETRIC DRAWING LINE

3/4"-HPN-40A07-1E21

PIPE MATERIAL: CS
HEAT TREATMENT (PWHT): N
PAINTING SCHEME (3): 1
PIPING CLASS: 1E21
WELDING CLASS (4): E
PED CATEGORY: Art 4.3
INSULATION CODE / THK. (mm): N 0

NOTES:
1. FOR TECHNICAL DETAILS SEE LINE LIST.
2. FOR VENT, DRAIN OR INSTRUMENT CONNECTION DETAILS SEE 45-L-45-000-2-00-80102.
3. WELDING ACCORDING TO 45-L-45-000-2-00-80021.
4. PAINTING ACCORDING TO 45-A-45-000-1-00-20160.
5. CODE SHOWN IN BOM BETWEEN "<" & ">" DENOTES REPSOL UNICODE. "<N/A>" MEANS UNICODE IS "NOT AVAILABLE".

CONTRACTOR: Tecnimont
CONTRACTOR DRAWING NUMBER: 4274-XH-DL-2121HPN40A07-4
PROJECT: 4001008

REPSOL
LOW LINEAL DENSITY POLYETHILENE (PEL) AND POLYPROPYLENE (PP) PLANTS FOR PROJECT - ALBA PROJECT
CLIENT / COMPLEX: REPSOL POLYMEROS/ SINES INDUSTRIAL COMPLEX

ANNEX: 19
SPEC.: L
DRAWING NUMBER: 19-000-2-02-00001 sheet 2121HPN40A07-4
REV.: 00

FILENAME: 19-000-2-02-00001 sheet 2121HPN40A07-4.dwg

THIS DOCUMENT BELONGS TO REPSOL. IT CAN NOT BE COPIED, REPRODUCED AND/OR USED WITHOUT PREVIOUS AUTHORIZATION OF REPSOL. COMPUTERIZED DRAWING (HANDWRITING STRICTLY FORBIDEN).

EXTR. DATE: 21-07-2023 09:32:32 STREAM NO.:4202 STREAM REV. NO. : 9 REV. CAUSE ID: