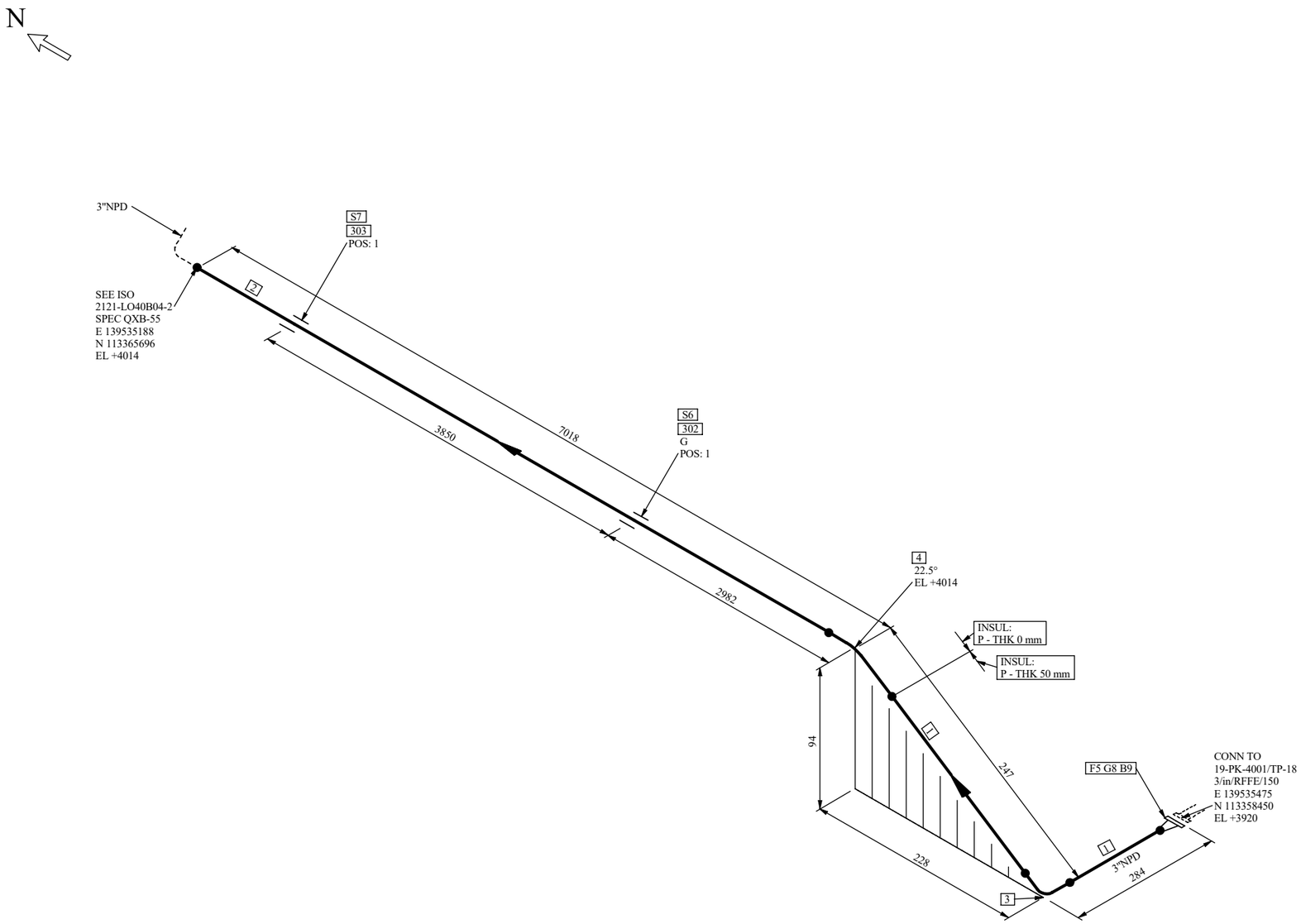

BILL OF MATERIAL

PT NO	COMPONENT DESCRIPTION	N.S. (IN)	ITEM CODE	QTY	HOLD STATUS
PIPE					
1	PIPE - A312-TP304/304L DUAL GR BE SMLS T01AL2CV02 S-10S <PIPB04DB2310S> (L-PIP113)	3	I3364303	0.3 M	
2	PIPE - A312-TP304/304L DUAL GR BE SMLS T01AL2CV02 S-10S <PIPB04DB2310S> (L-PIP113).	3	I3364303	7.0 M	
FITTINGS					
3	90 LR ELBOW ASME B16.9 A403-WP304/304L DG BE SMLS C01DL2FV01 S-10S <90LB23DF3310S> (L-8052)	3	I2259134	1	
4	45 LR ELBOW ASME B16.9 A403-WP304/304L DG BE SMLS C02DL2FV01 S-10S <45LB23DF3310S> (L-45L28)	3	I2259146	1	
FLANGES					
5	WN FLANGE ASME B16.5 150# A182-F304/304L DUAL GR RF BE 125 - 250 AARH F01CDL2ABV05 S-10S <WNFB450R15310S> (L-WNF55)	3	I2260689	1	
PIPE SUPPORTS					
6	SUPPORT HOR.NOT INS.PIP.N4G1	3	302	1	
7	WELDED BRACKET TO STRUCT. SB02 L80X80X10	3	303	1	
GASKETS					
8	SPIRAL WOUND GASKET ASME B16.20 150# RFTBE 316/GRAP SS 316 SS 316 ASME B16.5 G03GDP1IA10 <N/A> (N/A)	3	I1176462	1	
BOLTS					
9	STUD BOLTS&NUTS ASME B18.31.2/ B18.2.2 A320-B8 CL2/A194-8 INCH SIZE I01OB0901 <SB2R54G5/831/2> - 2 NUTS PER BOLT - 90 mm Length	5/8	I63615920	4	

REMARKS FOR MECHANICAL SUBCONTRACTOR:

1) LINES 1.1/2" AND SMALLER SHALL BE SUPPORTED IN FIELD IF NOT OTHERWISE INDICATED.
2) ALL DIMENSION AND PROPER CONFIGURATION FOR LINES NPS 1.1/2" AND SMALLER SHALL BE CHECKED IN FIELD BEFORE CONSTRUCTION.
3) FOR THE COMPONENTS MARKED AS FIELD WELDED WITH THIS SYMBOL ✖ , ONE WELD FOR ADJUSTMENT OF IN LINE COMPONENT MUST BE LEFT
4) FOR EXTRA PIPE LENGTH REFER TO 4274-LZ-PC-00000603.
5) GUSSETING TO BE IMPLEMENTED BY MECHANICAL SUBCONTRACTOR AS PER 45-L-45-000-2-00-80004 / 4274-XH-SG-00000002.
6) CROSSING BETWEEN WELDS ON PIPELINE SHALL NOT BE ADMITTED.
7) IN CASE OF DISCREPANCIES BETWEEN DATA SHOWN ON ISO AND IN LINE LIST (AS APPLICABLE, DATA SHOWN IN LINE LIST GOVERN.
8) ACTUAL CUT LENGTH OF PIPE AND FIELD WELDS SHALL BE DEFINED BY MECHANICAL SUBCONTRACTOR (REF.TO 4274-LZ-PC-00000603).
9) WHERE EARTHING BONDING IS REQUIRED, MECHANICAL SUBCONTRACTOR TO PERFORM IT BASED ON DOC. 45-P-000-7-06-00902/ 4274 -NN-DW-00000002 AND ASSEMBLY NO FEA005 AND FE019.

SUPPORTS LEGEND: 1 DENOTES PARTS LIST NO — PIPE SUPPORT — A = RESTING SUPPORT — G = GUIDE — F = AXIAL STOP — B = ANCHOR — M = SPRING — S = TEFLON PAD
WHERE A WITHOUT NUMBERING IS INDICATED, THIS MEANS THAT THERE IS A REST DIRECTLY ON STEEL STRUCTURE.

REV.	DESCRIPTION	DATE	DRW. BY	CHECK BY	APPR. BY	APPR. CLIENT
01	ISSUED FOR CONSTRUCTION	10-NOV-23	M.YADAV	P.VAZE	G.PAGANONI	
00	ISSUED FOR CONSTRUCTION	19-MAY-23	U.CHAVAN	P.VAZE	G.PAGANONI	

STRESS CALC. Nº: -
P & ID: 19-A-19-000-1-01-00001 sheet 29B
LINE LIST Nº: 19-L-19-000-2-00-80602
PIPE LAYOUT Nº: 19-L-19-000-2-00-86192 sheet 2

APPROVED FOR CONSTRUCTION

Signature for construction is shown on Iso list of relevant CWA

TITLE

ISOMETRIC DRAWING LINE

3"-LO-40B04-QXB-55 (P)

PIPE MATERIAL: 304, dual grade
HEAT TREATMENT (PWHT): N
PAINTING SCHEME (3): NR
PIPING CLASS: QXB-55
WELDING CLASS (4): M
PED CATEGORY: Art 4.3
INSULATION CODE / THK. (mm): P 50

NOTES:
1. FOR TECHNICAL DETAILS SEE LINE LIST.
2. FOR VENT, DRAIN OR INSTRUMENT CONNECTION DETAILS SEE 45-L-45-000-2-00-80102.
3. WELDING ACCORDING TO 45-L-45-000-2-00-80021.
4. PAINTING ACCORDING TO 45-A-45-000-1-00-20160.
5. CODE SHOWN IN BOM BETWEEN "<" & ">" DENOTES REPSOL UNICODE. "<N/A>" MEANS UNICODE IS "NOT AVAILABLE".

CONTRACTOR: Tecnimont
CONTRACTOR DRAWING NUMBER: 4274-XH-DL-2121LO40B04-1
PROJECT: 4001008

REPSOL
LOW LINEAL DENSITY POLYETHILENE (PEL) AND POLYPROPYLENE (PP) PLANTS FOR PROJECT - ALBA PROJECT
CLIENT / COMPLEX: REPSOL POLYMEROS/ SINES INDUSTRIAL COMPLEX

ANNEX: 19
SPEC.: L
DRAWING NUMBER: 19-000-2-02-00001 sheet 2121LO40B04-1
REV.: 01

FILENAME: 19-000-2-02-00001 sheet 2121LO40B04-1.dwg

EXTR. DATE: 09-11-2023 10:45:18 STREAM NO.: 801 STREAM REV. NO. : 10 REV. CAUSE ID: 1

01

THIS DOCUMENT BELONGS TO REPSOL. IT CAN NOT BE COPIED, REPRODUCED AND/OR USED WITHOUT PREVIOUS AUTHORIZATION OF REPSOL. COMPUTERIZED DRAWING (HANDWRITING STRICTLY FORBIDEN).