THIS DOCUMENT BELONGS TO REPSOL. IT CAN NOT BE COPIED, REPRODUCED AND/OR USED WITHOUT PREVIOUS AUTHORIZATION OF REPSOL. COMPUTERIZED DRAWING (HANDWRITING STRICTLY FORBIDEN).

EXTR. DATE: 21-07-2023 21:39:20 STREAM NO.:4510 STREAM REV. NO. : 9 REV. CAUSE ID:

N

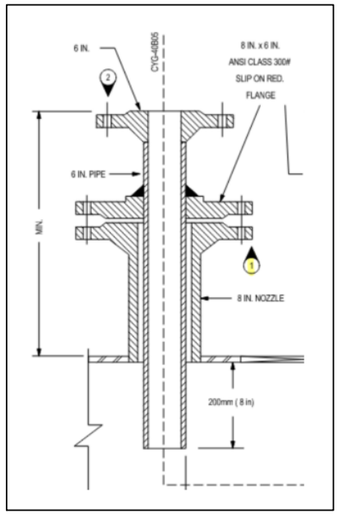

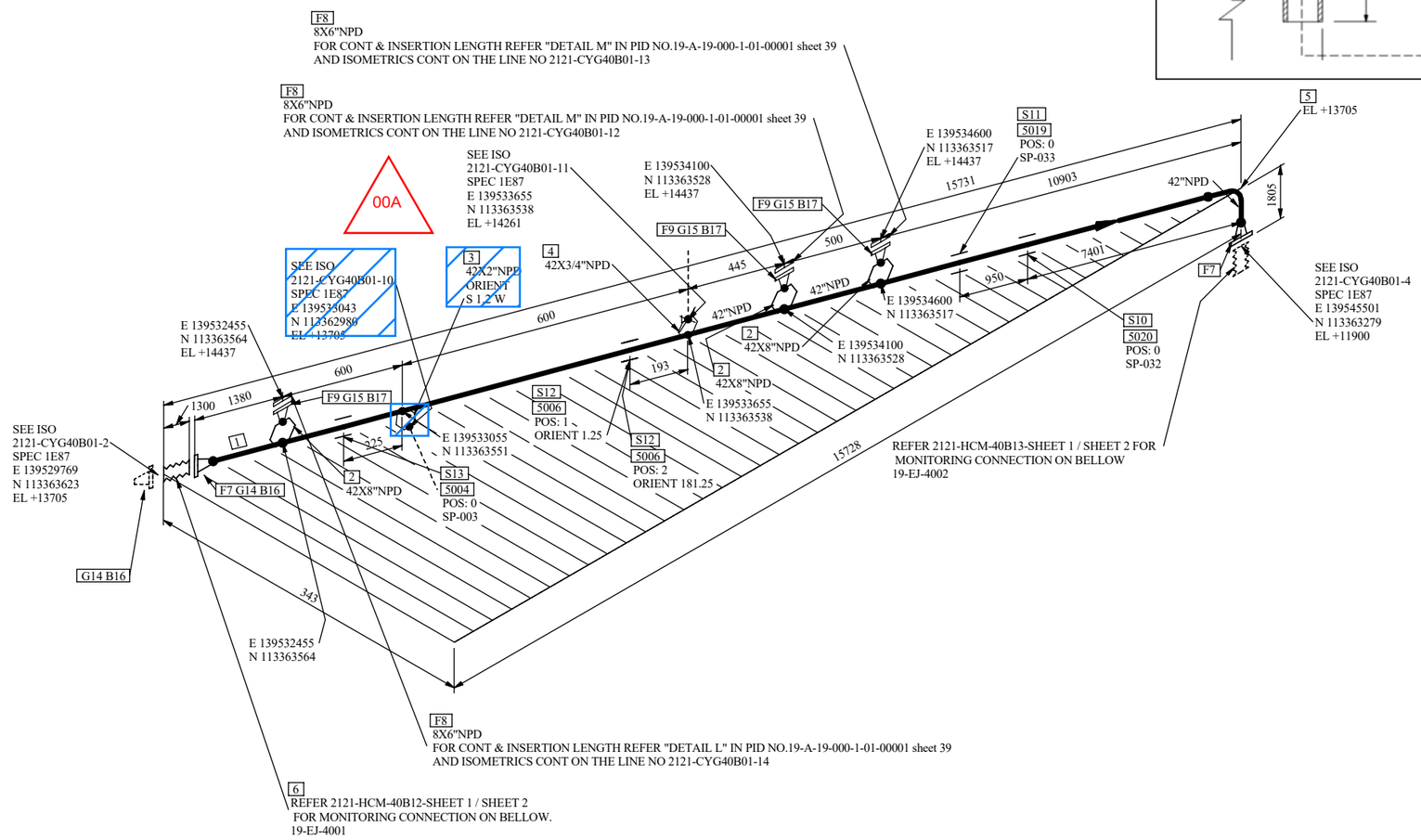

BILL OF MATERIAL

PT NO	COMPONENT DESCRIPTION	N.S. (IN)	ITEM CODE	QTY	HOLD STATUS
	PIPE				
1	PIPE - A671-CC60 BE EFW CL.22 SUPPL. REQ. S2 T01AC27V10 S-20.62 <PIPA030B1420.812> (L-PIP119)	42	I63792632	12.7 M	
	FITTINGS				
2	REDUCING WELDOLET MSS-SP-97 A105N BE - C35DC44V01 S-20.62 S-STD <WOLA300F035401815> (L-6634)	42X8	I64640273	3	
3	REDUCING WELDOLET MSS-SP-97 A105N BE - C35DC44V01 S-20.62 S-STD <WOLA300E035401415> (L-6634)	42X2	I63793791	1	00A
4	REDUCING SOCKOLET MSS-SP-97 3000# A105N BE SWE - R13DNC44V101 NREQD <SOKA300LB03511> (L-343)	42X3/4	I7843539	1	
5	90 LR ELBOW ASME B16.9 A420-WPL6 BE WELD C01DC09V02 S-20.62 <90LL21WF3420.812> (L-90L50-W)	42	I7519052	1	
6	SPECIALTY COMPONENT	42	19-EJ-4001	1	
	FLANGES				
7	WN FLANGE ASME B16.47-B 300# A105N RFFE BE 125 - 250 AARH F01MFC44BV05 S-20.62 <WNFA300R36420.812> (L-8519)	42	I63598454	2	
8	SLIP ON RED FLANGE ASME B16.5 300# A105N RFFE PE 125 - 250 AARH F53CFC44BZ05 NREQD <RSFA300R351817> (L-RSF01)	8X6	I63599183	3	
9	WN FLANGE ASME B16.5 300# A105N RFFE BE 125 - 250 AARH F01CFC44BV05 S-STD <WNFA300R358STD> (L-236)	8	I4274966	3	
	PIPE SUPPORTS				
10	SPECIALITY SUPPORT - SP-032	42	5020	1	
11	SPECIALITY SUPPORT - SP-033	42	5019	1	
12	RESTING SHOE WELDED -C4A1 H = 100 L = 400	42	5006	2	
13	SPECIALITY SUPPORT - SP-003	42	5004	1	
	GASKETS				
14	JACKETED GASKET ASME B16.20 300# RFFE SS 316 / GRAPHOIL Gr. GTH 125 - 250 AARH 3.2 mmTHICK 3 PLY CORRUGATED ASME B16.47-B - G04GFB3BE02 <N/A> (N/A)	42	I9806431	2	
15	SPIRAL WOUND GASKET ASME B16.20 300# RFTBE 316/GRAFOIL CARBON STEEL SS 316 ASME B16.5 G03GFP1IQ01 <SPAQ504R3EA8> (L-SPA01)	8	I60205416	3	
	BOLTS				
16	STUD BOLTS&NUTS ASME B18.31.2/ B18.2.2 A193-B7/A194-2H INCH SIZE I01OB0301 <SB2R51G13/4133/4> - 2 NUTS PER BOLT - 355 mm Length	1.3/4	I53439069	72	
17	STUD BOLTS&NUTS ASME B18.31.2/ B18.2.2 A193-B7/A194-2H INCH SIZE I01OB0301 <SB2R51G7/851/2> - 2 NUTS PER BOLT - 140 mm Length	7/8	I53437666	36	

REMARKS FOR MECHANICAL SUBCONTRACTOR:

1) LINES 1.1/2" AND SMALLER SHALL BE SUPPORTED IN FIELD IF NOT OTHERWISE INDICATED.
2) ALL DIMENSION AND PROPER CONFIGURATION FOR LINES NPS 1.1/2" AND SMALLER SHALL BE CHECKED IN FIELD BEFORE CONSTRUCTION.
3) FOR THE COMPONENTS MARKED AS FIELD WELDED WITH THIS SYMBOL ✱ , ONE WELD FOR ADJUSTMENT OF IN LINE COMPONENT MUST BE LEFT
4) FOR EXTRA PIPE LENGTH REFER TO 4274-LZ-PC-00000603.
5) GUSSETING TO BE IMPLEMENTED BY MECHANICAL SUBCONTRACTOR AS PER 45-L-45-000-2-00-80004 / 4274-XH-SG-00000002.
6) CROSSING BETWEEN WELDS ON PIPELINE SHALL NOT BE ADMITTED.
7) IN CASE OF DISCREPANCIES BETWEEN DATA SHOWN ON ISO AND IN LINE LIST (AS APPLICABLE, DATA SHOWN IN LINE LIST GOVERN.
8) ACTUAL CUT LENGTH OF PIPE AND FIELD WELDS SHALL BE DEFINED BY MECHANICAL SUBCONTRACTOR (REF.TO 4274-LZ-PC-00000603).
9) WHERE EARTHING BONDING IS REQUIRED, MECHANICAL SUBCONTRACTOR TO PERFORM IT BASED ON DOC. 45-P-000-7-06-00902/ 4274 -NN-DW-00000002 AND ASSEMBLY NO FEA005 AND FE019.

SUPPORTS LEGEND: 1 DENOTES PARTS LIST NO — PIPE SUPPORT — A = RESTING SUPPORT, G = GUIDE, F = AXIAL STOP, B = ANCHOR, M = SPRING, S = TEFLON PAD — WHERE A WITHOUT NUMBERING IS INDICATED, THIS MEANS THAT THERE IS A REST DIRECTLY ON STEEL STRUCTURE.

REV.	DESCRIPTION	DATE	DRW. BY	CHECK BY	APPR. BY	APPR. CLIENT
00A	ISSUED FOR CONSTRUCTION - SITE REVISON	12-JUN-24	A.BARAATI	F.CARRA	M.PECILE	
00	ISSUED FOR CONSTRUCTION	21-JUL-23	M.YADAV	P.VAZE	G.PAGANONI	

STRESS CALC. Nº: REP-PE-001
P & ID: 19-A-19-000-1-01-00001 sheet 29
LINE LIST Nº: 19-L-19-000-2-00-80602
PIPE LAYOUT Nº: 19-L-19-000-2-00-86192 sheet 4

APPROVED FOR CONSTRUCTION

Signature for construction is shown on Iso list of relevant CWA

TITLE

ISOMETRIC DRAWING LINE

42"-CYG-40B01-1E87 (PS)

PIPE MATERIAL: CS
HEAT TREATMENT (PWHT): N
PAINTING SCHEME (3): 20
PIPING CLASS: 1E87
WELDING CLASS (4): A-1
PED CATEGORY: III
INSULATION CODE / THK. (mm): PS 50

NOTES:
1. FOR TECHNICAL DETAILS SEE LINE LIST.
2. FOR VENT, DRAIN OR INSTRUMENT CONNECTION DETAILS SEE 45-L-45-000-2-00-80102.
3. WELDING ACCORDING TO 45-L-45-000-2-00-80021.
4. PAINTING ACCORDING TO 45-A-45-000-1-00-20160.
5. CODE SHOWN IN BOM BETWEEN "<" & ">" DENOTES REPSOL UNICODE. "<N/A>" MEANS UNICODE IS "NOT AVAILABLE".

CONTRACTOR: Tecnimont
CONTRACTOR DRAWING NUMBER: 4274-XH-DL-2121CYG40B01-3
PROJECT: 4001008

REPSOL
LOW LINEAL DENSITY POLYETHILENE (PEL) AND POLYPROPYLENE (PP) PLANTS FOR PROJECT - ALBA PROJECT
CLIENT / COMPLEX: REPSOL POLYMEROS/ SINES INDUSTRIAL COMPLEX

ANNEX: 19
SPEC.: L
DRAWING NUMBER: 19-000-2-02-00001 sheet 2121CYG40B01-3
REV.: 00A

FILENAME: 19-000-2-02-00001 sheet 2121CYG40B01-3.dwg