THIS DOCUMENT BELONGS TO REPSOL. IT CAN NOT BE COPIED, REPRODUCED AND/OR USED WITHOUT PREVIOUS AUTHORIZATION OF REPSOL. COMPUTERIZED DRAWING (HANDWRITING STRICTLY FORBIDEN).

EXTR. DATE: 23-08-2023 11:16:46 STREAM NO.:4560 STREAM REV. NO. : 10 REV. CAUSE ID: 3

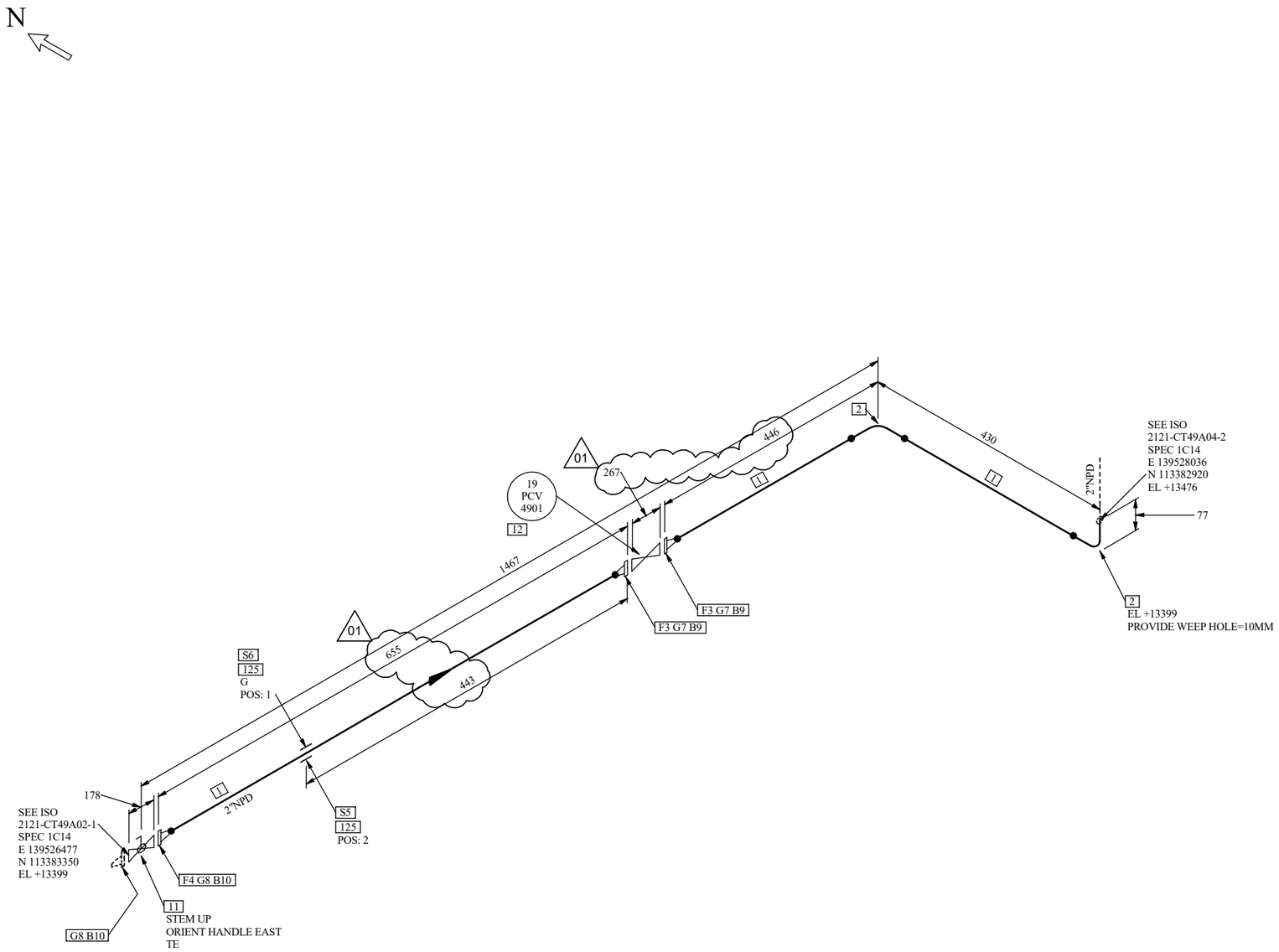

BILL OF MATERIAL

PT NO	COMPONENT DESCRIPTION	N.S. (IN)	ITEM CODE	QTY	HOLD STATUS
PIPE					
1	PIPE - A106-B BE SMLS T01AC03V02 S-STD <PIPA010B12STD> (L-7806)	2	I117862	1.1 M	
FITTINGS					
2	90 LR ELBOW ASME B16.9 A234-WPB BE SMLS C01DC04V01 S-STD <90LA200F32STD> (L-7955)	2	I128529	2	
FLANGES					
3	WN FLANGE ASME B16.5 300# A105N RFFE BE 125 - 250 AARH F01CFC44BV05 S-STD <WNFA300R352STD> (L-236)	2	I5355797	2	
4	WN FLANGE ASME B16.5 150# A105N RFFE BE 125 - 250 AARH F01CDC44BV05 S-STD <WNFA300R152STD> (L-149)	2	I5355795	1	
PIPE SUPPORTS					
5	STAKES SUPPORTS ST02 L100X100X10	2	125	1	
6	STANDARD GUIDE FOR NOT INS. PIPING-N1G1	2	125	1	
GASKETS					
7	SPIRAL WOUND GASKET ASME B16.20 300# RFFE 304/PTFE CARBON STEEL SS 304 ASME B16.5 G03GFB1IG12 <SPAQ505R3EA2> (L-SPA05)	2	I63598756	2	
8	SPIRAL WOUND GASKET ASME B16.20 150# RFFE 304/PTFE CARBON STEEL SS 304 ASME B16.5 G03GDB1IG12 <SPAQ505R1EA2> (L-SPA04)	2	I2230484	2	
BOLTS					
9	STUD BOLTS&NUTS ASME B18.31.2/ B18.2.2 A193-B7/A194-2H INCH SIZE I01OB0301 <SB2R51G5/831/2> - 2 NUTS PER BOLT - 90 mm Length	5/8	I53437440	16	
10	STUD BOLTS&NUTS ASME B18.31.2/ B18.2.2 A193-B7/A194-2H INCH SIZE I01OB0301 <SB2R51G5/831/2> - 2 NUTS PER BOLT - 85 mm Length	5/8	I53437429	8	
VALVES / IN-LINE ITEMS					
11	BALL VALVE API 608 150# A216-WCB RFFE 316/R-PTFE, GF B7/2H 125 - 250 AARH 2PSB-FULL BORE FLOATING BALL LE ASME B16.5 V04JDC29BTR NREQD <B42L-BA1434> (L-BA1434)	2	I8683137	1	
INSTRUMENTS					
12	INSTRUMENT COMPONENT	2	19-PCV-4901	1	

REMARKS FOR MECHANICAL SUBCONTRACTOR:

1) LINES 1.1/2" AND SMALLER SHALL BE SUPPORTED IN FIELD IF NOT OTHERWISE INDICATED.
2) ALL DIMENSION AND PROPER CONFIGURATION FOR LINES NPS 1.1/2" AND SMALLER SHALL BE CHECKED IN FIELD BEFORE CONSTRUCTION.
3) FOR THE COMPONENTS MARKED AS FIELD WELDED WITH THIS SYMBOL ✕ , ONE WELD FOR ADJUSTMENT OF IN LINE COMPONENT MUST BE LEFT
4) FOR EXTRA PIPE LENGTH REFER TO 4274-LZ-PC-00000603.
5) GUSSETING TO BE IMPLEMENTED BY MECHANICAL SUBCONTRACTOR AS PER 45-L-45-000-2-00-80004 / 4274-XH-SG-00000002.
6) CROSSING BETWEEN WELDS ON PIPELINE SHALL NOT BE ADMITTED.
7) IN CASE OF DISCREPANCIES BETWEEN DATA SHOWN ON ISO AND IN LINE LIST (AS APPLICABLE, DATA SHOWN IN LINE LIST GOVERN.
8) ACTUAL CUT LENGTH OF PIPE AND FIELD WELDS SHALL BE DEFINED BY MECHANICAL SUBCONTRACTOR (REF.TO 4274-LZ-PC-00000603).
9) WHERE EARTHING BONDING IS REQUIRED, MECHANICAL SUBCONTRACTOR TO PERFORM IT BASED ON DOC. 45-P-000-7-06-00902/ 4274 -NN-DW-00000002 AND ASSEMBLY NO FEA005 AND FE019.

SUPPORTS LEGEND: 1 DENOTES PARTS LIST NO — PIPE SUPPORT — A = RESTING SUPPORT G = GUIDE F = AXIAL STOP B = ANCHOR M = SPRING S = TEFLON PAD
WHERE A WITHOUT NUMBERING IS INDICATED, THIS MEANS THAT THERE IS A REST DIRECTLY ON STEEL STRUCTURE.

REV.	DESCRIPTION	DATE	DRW. BY	CHECK BY	APPR. BY	APPR. CLIENT
01	ISSUED FOR CONSTRUCTION	24-AUG-23	U.CHAVAN	P.VAZE	G.PAGANONI	
00	ISSUED FOR CONSTRUCTION	31-MAR-23	U.CHAVAN	P.VAZE	G.PAGANONI	

STRESS CALC. Nº: -
P & ID: 19-A-19-000-1-01-00001 sheet 57
LINE LIST Nº: 19-L-19-000-2-00-80602
PIPE LAYOUT Nº: 19-L-19-000-2-00-86196 sheet 4

APPROVED FOR CONSTRUCTION

Signature for construction is shown on Iso list of relevant CWA

TITLE

ISOMETRIC DRAWING LINE

2"-CT-49A04-1C14

PIPE MATERIAL: CS
HEAT TREATMENT (PWHT): N
PAINTING SCHEME (3): 1
PIPING CLASS: 1C14
WELDING CLASS (4): E-2
PED CATEGORY: I
INSULATION CODE / THK. (mm): N 0

NOTES:
1. FOR TECHNICAL DETAILS SEE LINE LIST.
2. FOR VENT, DRAIN OR INSTRUMENT CONNECTION DETAILS SEE 45-L-45-000-2-00-80102.
3. WELDING ACCORDING TO 45-L-45-000-2-00-80021.
4. PAINTING ACCORDING TO 45-A-45-000-1-00-20160.
5. CODE SHOWN IN BOM BETWEEN "<" & ">" DENOTES REPSOL UNICODE. "<N/A>" MEANS UNICODE IS "NOT AVAILABLE".

CONTRACTOR: Tecnimont
CONTRACTOR DRAWING NUMBER: 4274-XH-DL-2121CT49A04-1
PROJECT: 4001008

REPSOL
LOW LINEAL DENSITY POLYETHILENE (PEL) AND POLYPROPYLENE (PP) PLANTS FOR PROJECT - ALBA PROJECT
CLIENT / COMPLEX: REPSOL POLYMEROS/ SINES INDUSTRIAL COMPLEX

ANNEX 19 | SPEC. L | DRAWING NUMBER 19-000-2-02-00001 sheet 2121CT49A04-1 | REV. 01

FILENAME: 19-000-2-02-00001 sheet 2121CT49A04-1.dwg