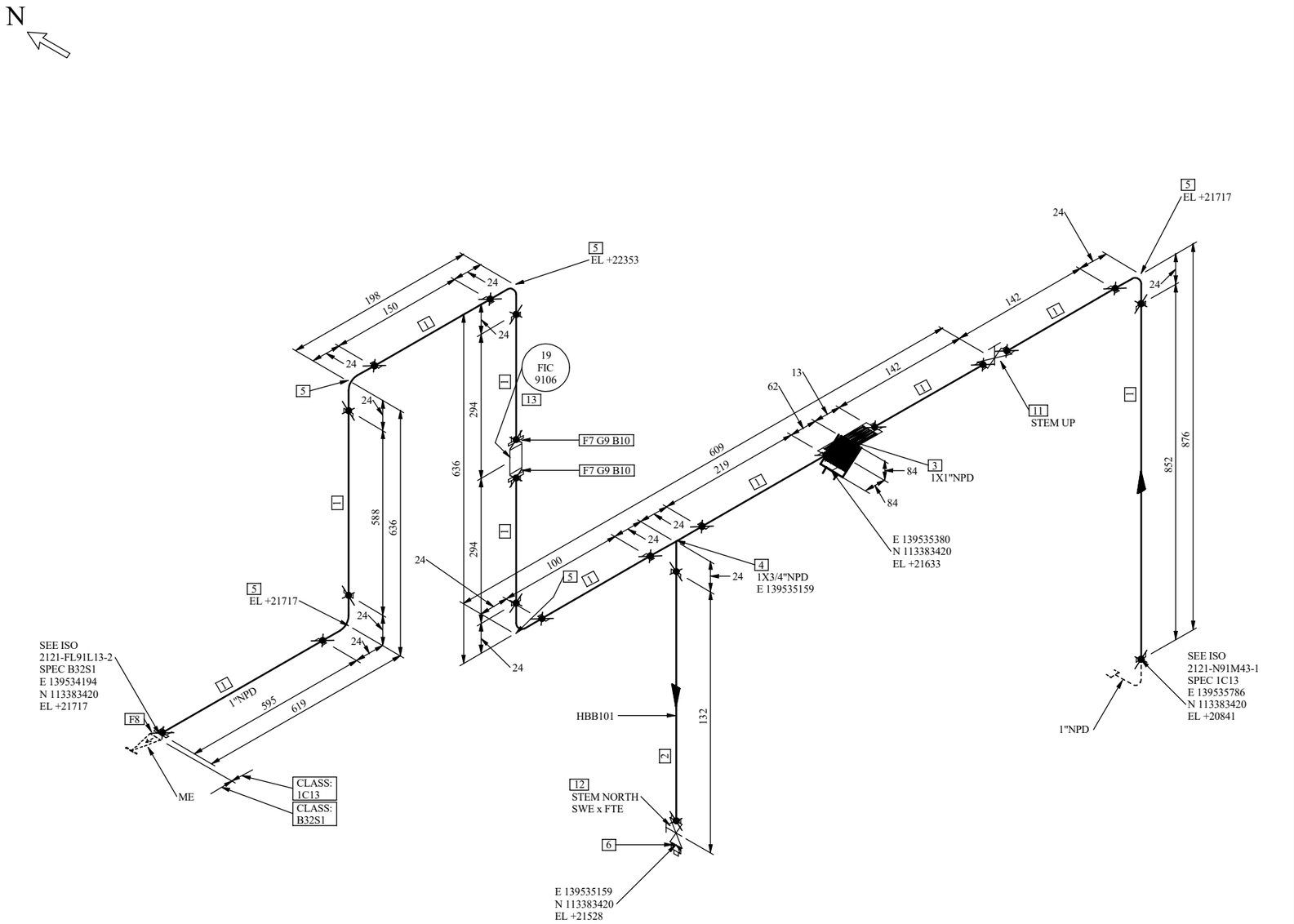

BILL OF MATERIAL

PT NO	COMPONENT DESCRIPTION	N.S. (IN)	ITEM CODE	QTY	HOLD STATUS
PIPE					
1	PIPE - A106-B PE SMLS T01AC03Z02 S-XS <PIPA010A11XS> (L-6679)	1	I132793	2.9 M	
2	PIPE - A106-B PE SMLS T01AC03Z02 S-XS <PIPA010A13/4XS> (L-6679)	3/4	I132785	0.1 M	
FITTINGS					
3	Y-STRAINER API 602/AA 800# A105N SWE SWE 316 SHEET WC Y01LIC44115P NREQD <N/A> (N/A)	1X1	I65637073	1	
4	REDUCING TEE ASME B16.11 3000# A105N SWE SWE - R12FNC441101 NREQD <RTEA300KBK13/4> (L-RTE15).	1X3/4	I1651305	1	
5	90 ELBOW ASME B16.11 3000# A105N SWE SWE - R31FNC441103 NREQD <90FA300LBK1> (L-178)	1	I1651296	5	
6	PLUG ROUND HEAD ASME B16.11 - A105N MTE NREQD - R42FQC44W001 NREQD <PLUA300CK3/4> (L-77)	3/4	I10088232	1	
FLANGES					
7	SW FLANGE ASME B16.5 300# A105N RFFE SWE 125 - 250 AARH F02CFC44B105 S-XS <SWFA300R351XS> (L-375)	1	I4217823	2	
8	SW FLANGE ASME B16.5 150# A105N RFFE SWE 125 - 250 AARH F02CDC44B105 S-XS <SWFA300R151XS> (L-295)	1	I5378343	1	
GASKETS					
9	SPIRAL WOUND GASKET ASME B16.20 300# RFFE 304/PTFE CARBON STEEL SS 304 ASME B16.5 G03GFB11G12 <SPAQ505R3EA1> (L-SPA05)	1	I63598746	2	
BOLTS					
10	STUD BOLTS&NUTS ASME B18.31.2/ B18.2.2 A193-B7/A194-2H INCH SIZE I01OB0301 <SB2R51G5/831/4> - 2 NUTS PER BOLT - 80 mm Length	5/8	I53437418	8	
VALVES / IN-LINE ITEMS					
11	GATE VALVE API 602 800# A105N SWE SWE 8-F6&HF WB-OS&Y SOW PTFE HW V01GIC4411BM4 NREQD <G61L-GA1423A> (L-GA1423A)	1	I63559256	1	
12	GATE VALVE API 602 800# A105N SWE FTE 8-F6&HF WB-OS&Y SOW PTFE HW V01GIC4412BM4 NREQD <G73_4L-GA1424A> (L-GA1424A)	3/4	I63559275	1	
INSTRUMENTS					
13	INSTRUMENT COMPONENT	1	19-FIC-9106	1	

REMARKS FOR MECHANICAL SUBCONTRACTOR:

1) LINES 1.1/2" AND SMALLER SHALL BE SUPPORTED IN FIELD IF NOT OTHERWISE INDICATED.
2) ALL DIMENSION AND PROPER CONFIGURATION FOR LINES NPS 1.1/2" AND SMALLER SHALL BE CHECKED IN FIELD BEFORE CONSTRUCTION.
3) FOR THE COMPONENTS MARKED AS FIELD WELDED WITH THIS SYMBOL ✕ , ONE WELD FOR ADJUSTMENT OF IN LINE COMPONENT MUST BE LEFT
4) FOR EXTRA PIPE LENGTH REFER TO 4274-LZ-PC-00000603.
5) GUSSETING TO BE IMPLEMENTED BY MECHANICAL SUBCONTRACTOR AS PER 45-L-45-000-2-00-80004 / 4274-XH-SG-00000002.
6) CROSSING BETWEEN WELDS ON PIPELINE SHALL NOT BE ADMITTED.
7) IN CASE OF DISCREPANCIES BETWEEN DATA SHOWN ON ISO AND IN LINE LIST (AS APPLICABLE, DATA SHOWN IN LINE LIST GOVERN.
8) ACTUAL CUT LENGTH OF PIPE AND FIELD WELDS SHALL BE DEFINED BY MECHANICAL SUBCONTRACTOR (REF.TO 4274-LZ-PC-00000603).
9) WHERE EARTHING BONDING IS REQUIRED, MECHANICAL SUBCONTRACTOR TO PERFORM IT BASED ON DOC. 45-P-000-7-06-00902/ 4274 -NN-DW-00000002 AND ASSEMBLY NO FEA005 AND FE019.

SUPPORTS LEGEND: 1 DENOTES PARTS LIST NO — PIPE SUPPORT — A = RESTING SUPPORT G = GUIDE F = AXIAL STOP B = ANCHOR M = SPRING S = TEFLON PAD
WHERE A WITHOUT NUMBERING IS INDICATED, THIS MEANS THAT THERE IS A REST DIRECTLY ON STEEL STRUCTURE.

REV.	DESCRIPTION	DATE	DRW. BY	CHECK BY	APPR. BY	APPR. CLIENT
00	ISSUED FOR REFERENCE	23-JUN-23	U.CHAVAN	P.VAZE	G.PAGANONI	

STRESS CALC. Nº: -
P & ID: 19-A-19-000-1-01-00001 sheet 110
LINE LIST Nº: 19-L-19-000-2-00-80602
PIPE LAYOUT Nº: 19-L-19-000-2-00-86196 sheet 6

ISSUED FOR REFERENCE

Signature for construction is shown on Iso list of relevant CWA

TITLE

ISOMETRIC DRAWING LINE

1"-N-91M43-1C13

PIPE MATERIAL: CS
HEAT TREATMENT (PWHT): N
PAINTING SCHEME (3): 1
PIPING CLASS: 1C13
WELDING CLASS (4): E
PED CATEGORY: Art 4.3
INSULATION CODE / THK. (mm): N 0

NOTES:
1. FOR TECHNICAL DETAILS SEE LINE LIST.
2. FOR VENT, DRAIN OR INSTRUMENT CONNECTION DETAILS SEE 45-L-45-000-2-00-80102.
3. WELDING ACCORDING TO 45-L-45-000-2-00-80021.
4. PAINTING ACCORDING TO 45-A-45-000-1-00-20160.
5. CODE SHOWN IN BOM BETWEEN "<" & ">" DENOTES REPSOL UNICODE. "<N/A>" MEANS UNICODE IS "NOT AVAILABLE".

CONTRACTOR: Tecnimont
CONTRACTOR DRAWING NUMBER: 4274-XH-DL-2121N91M43-2
PROJECT: 4001008

REPSOL
LOW LINEAL DENSITY POLYETHILENE (PEL) AND POLYPROPYLENE (PP) PLANTS FOR PROJECT - ALBA PROJECT
CLIENT / COMPLEX: REPSOL POLYMEROS/ SINES INDUSTRIAL COMPLEX

ANNEX 19 | SPEC. L | DRAWING NUMBER 19-000-2-02-00001 sheet 2121N91M43-2 | REV. 00

FILENAME: 19-000-2-02-00001 sheet 2121N91M43-2.dwg

EXTR. DATE: 21-06-2023 14:33:46 STREAM NO.:3200 STREAM REV. NO. : 9 REV. CAUSE ID:

THIS DOCUMENT BELONGS TO REPSOL. IT CAN NOT BE COPIED, REPRODUCED AND/OR USED WITHOUT PREVIOUS AUTHORIZATION OF REPSOL COMPUTERIZED DRAWING (HANDWRITING STRICTLY FORBIDEN).