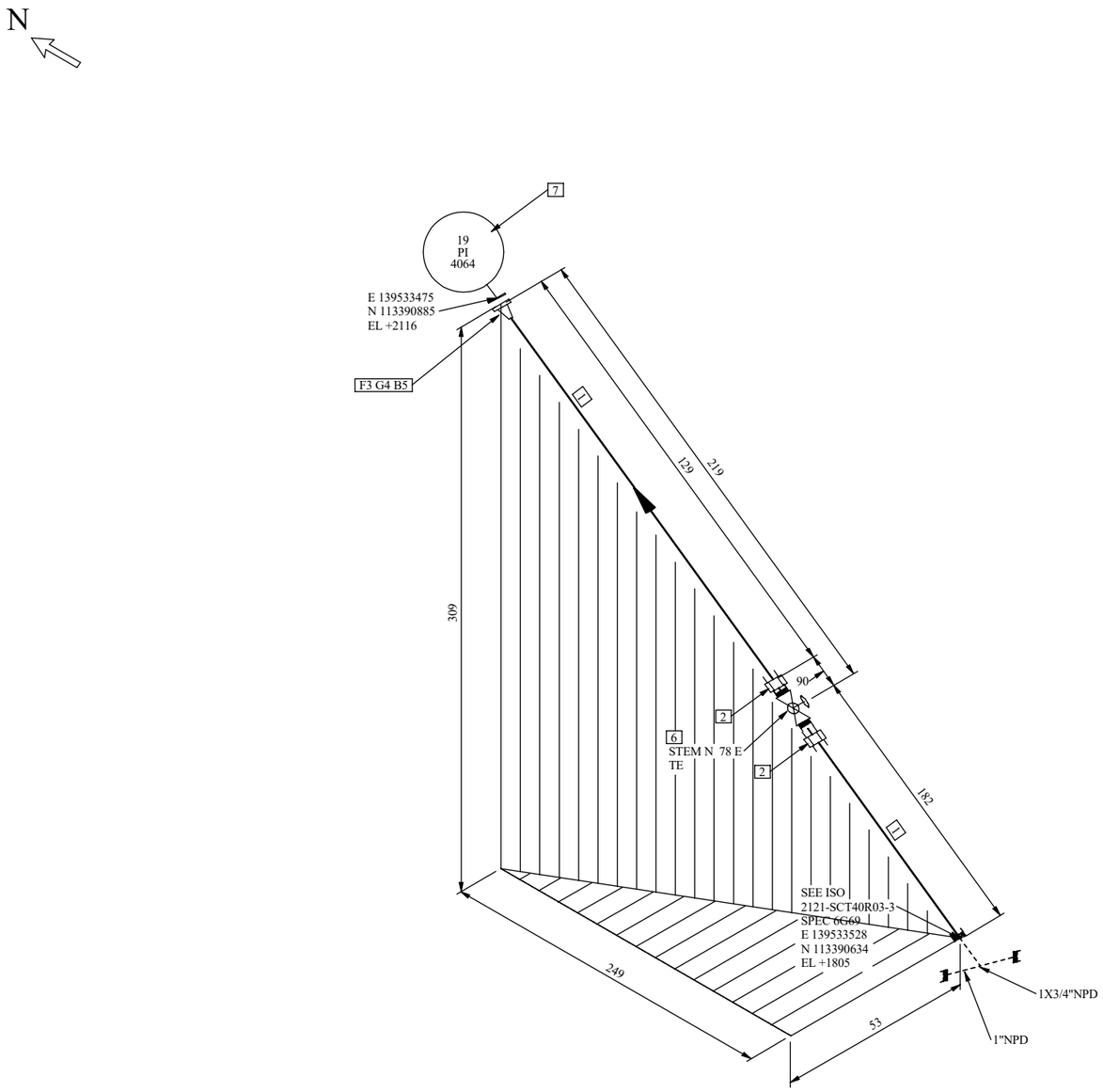

BILL OF MATERIAL

PT NO	COMPONENT DESCRIPTION	N.S. (IN)	ITEM CODE	QTY	HOLD STATUS
PIPE					
1	TUBE - A269-TP316/316L-DUAL GRADE PE SMLS T02ALK7Z01 0.095" tubing <N/A> (N/A)	3/4	I65396072	0.2 M	
FITTINGS					
2	COMPR MALE CONNECT MFTR - A182-F316/316L DUAL GR FFRE PE - R60AQL1M7Z10 NREQD <N/A> (N/A)	3/4	I7062336	2	
FLANGES					
3	COMPRESSION FLANGE MFTR 2500# A182-F316/316L DUAL GR RFFE FFRE ASME B16.5 F50AML1MB705 NREQD <N/A> (N/A)	3/4	I63464620	1	
GASKETS					
4	SPIRAL WOUND GASKET ASME B16.20 2500# RFTBE 316/GRAP SS 316 SS 316 ASME B16.5 G03GMP1IA10 <N/A> (N/A)	3/4	I68403357	1	
BOLTS					
5	STUD BOLTS&NUTS ASME B18.31.2/ B18.2.2 A193-B8M CL2/A194-8MA INCH SIZE I01OB1601 <SB2R58G3/451/4> - 2 NUTS PER BOLT - 130 mm Length	3/4	I63801678	4	
VALVES / IN-LINE ITEMS					
6	COMPR BALL VALVE MFTR 6000# A182-F316/316L DUAL GR FFRE FFRE 316-CARBON/GLASS REINFORCED PTFE TRUNNION-MOUNTED OHW V70AOL1M7739 NREQD <N/A> (N/A)	3/4	I65625051	1	
INSTRUMENTS					
7	INSTRUMENT COMPONENT	3/4	19-PI-4064	1	

REMARKS FOR MECHANICAL SUBCONTRACTOR:

1) LINES 1.1/2" AND SMALLER SHALL BE SUPPORTED IN FIELD IF NOT OTHERWISE INDICATED.
2) ALL DIMENSION AND PROPER CONFIGURATION FOR LINES NPS 1.1/2" AND SMALLER SHALL BE CHECKED IN FIELD BEFORE CONSTRUCTION.
3) FOR THE COMPONENTS MARKED AS FIELD WELDED WITH THIS SYMBOL ✕ , ONE WELD FOR ADJUSTMENT OF IN LINE COMPONENT MUST BE LEFT
4) FOR EXTRA PIPE LENGTH REFER TO 4274-LZ-PC-00000603.
5) GUSSETING TO BE IMPLEMENTED BY MECHANICAL SUBCONTRACTOR AS PER 45-L-45-000-2-00-80004 / 4274-XH-SG-00000002.
6) CROSSING BETWEEN WELDS ON PIPELINE SHALL NOT BE ADMITTED.
7) IN CASE OF DISCREPANCIES BETWEEN DATA SHOWN ON ISO AND IN LINE LIST (AS APPLICABLE, DATA SHOWN IN LINE LIST GOVERN.
8) ACTUAL CUT LENGTH OF PIPE AND FIELD WELDS SHALL BE DEFINED BY MECHANICAL SUBCONTRACTOR (REF.TO 4274-LZ-PC-00000603).
9) WHERE EARTHING BONDING IS REQUIRED, MECHANICAL SUBCONTRACTOR TO PERFORM IT BASED ON DOC. 45-P-000-7-06-00902/ 4274 -NN-DW-00000002 AND ASSEMBLY NO FEA005 AND FE019.

SUPPORTS LEGEND: 1 DENOTES PARTS LIST NO — PIPE SUPPORT — A = RESTING SUPPORT, G = GUIDE, F = AXIAL STOP, B = ANCHOR, M = SPRING, S = TEFLON PAD — WHERE A WITHOUT NUMBERING IS INDICATED, THIS MEANS THAT THERE IS A REST DIRECTLY ON STEEL STRUCTURE.

REV.	DESCRIPTION	DATE	DRW. BY	CHECK BY	APPR. BY	APPR. CLIENT
00	ISSUED FOR REFERENCE	05-JAN-24	M.YADAV	P.VAZE	G.PAGANONI	

STRESS CALC. Nº: -
P & ID: 19-A-19-000-1-01-00001 sheet 46
LINE LIST Nº: 19-L-19-000-2-00-80602
PIPE LAYOUT Nº: 19-L-19-000-2-00-86197 sheet 1

ISSUED FOR REFERENCE

Signature for construction is shown on Iso list of relevant CWA

TITLE

ISOMETRIC DRAWING LINE

3/4"-SCT-40R03-6G69 (ET)

PIPE MATERIAL: 316, dual grade
HEAT TREATMENT (PWHT): -
PAINTING SCHEME (3): NR
PIPING CLASS: 6G69
WELDING CLASS (4): -
PED CATEGORY: Art 4.3
INSULATION CODE / THK. (mm): ET 30

NOTES:
1. FOR TECHNICAL DETAILS SEE LINE LIST.
2. FOR VENT, DRAIN OR INSTRUMENT CONNECTION DETAILS SEE 45-L-45-000-2-00-80102.
3. WELDING ACCORDING TO 45-L-45-000-2-00-80021.
4. PAINTING ACCORDING TO 45-A-45-000-1-00-20160.
5. CODE SHOWN IN BOM BETWEEN "<" & ">" DENOTES REPSOL UNICODE. "<N/A>" MEANS UNICODE IS "NOT AVAILABLE".

CONTRACTOR: Tecnimont
CONTRACTOR DRAWING NUMBER: 4274-XH-DL-2121SCT40R03-4
PROJECT: 4001008

REPSOL
LOW LINEAL DENSITY POLYETHILENE (PEL) AND POLYPROPYLENE (PP) PLANTS FOR PROJECT - ALBA PROJECT
CLIENT / COMPLEX: REPSOL POLYMEROS/ SINES INDUSTRIAL COMPLEX

ANNEX: 19
SPEC.: L
DRAWING NUMBER: 19-000-2-02-00001 sheet 2121SCT40R03-4
REV.: 00

FILENAME: 19-000-2-02-00001 sheet 2121SCT40R03-4.dwg

EXTR. DATE: 03-01-2024 16:22:45 STREAM NO.:4527 STREAM REV. NO. : 10 REV. CAUSE ID:

THIS DOCUMENT BELONGS TO REPSOL. IT CAN NOT BE COPIED, REPRODUCED AND/OR USED WITHOUT PREVIOUS AUTHORIZATION OF REPSOL. COMPUTERIZED DRAWING (HANDWRITING STRICTLY FORBIDEN).