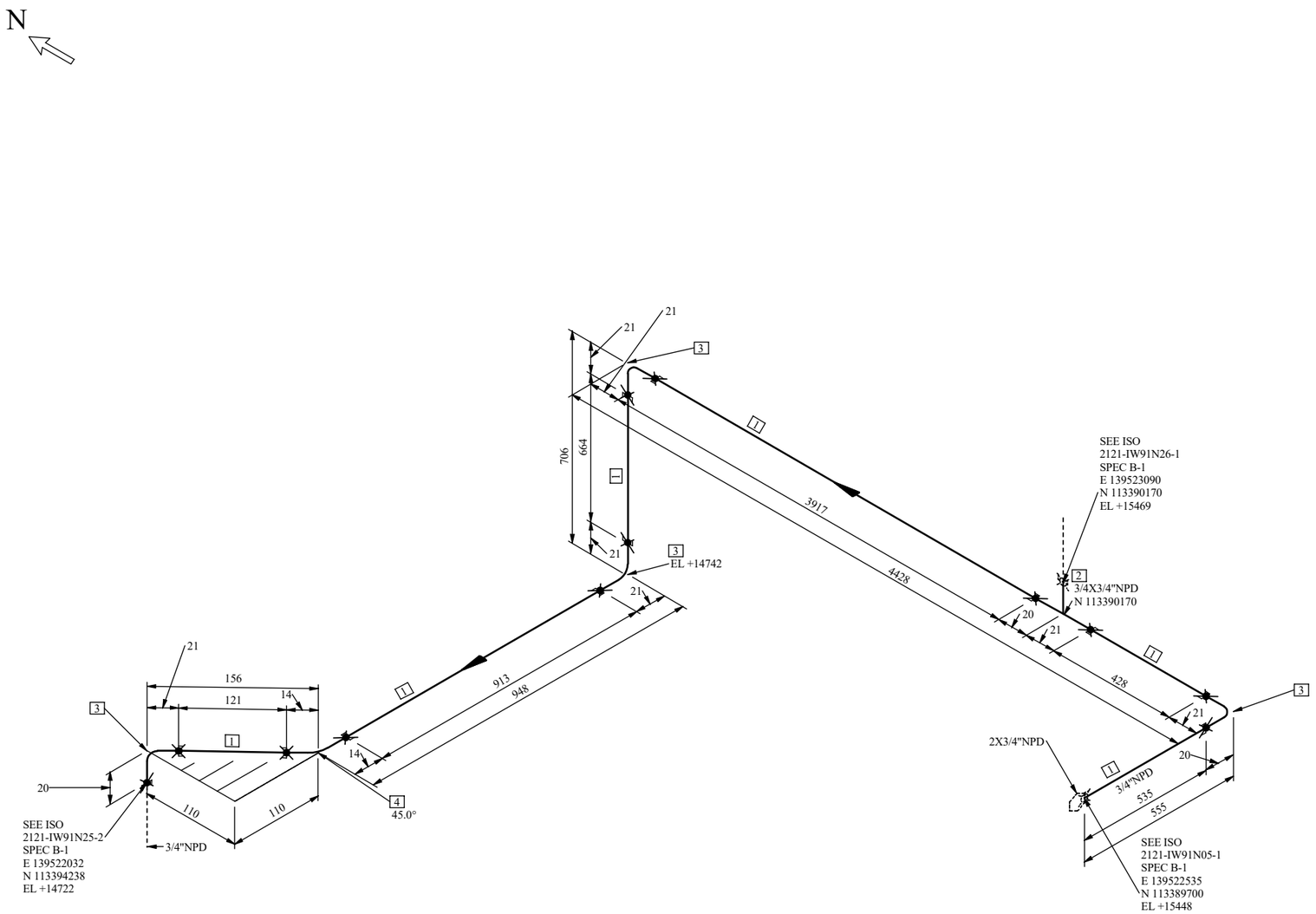

BILL OF MATERIAL

PT NO	COMPONENT DESCRIPTION	N.S. (IN)	ITEM CODE	QTY	HOLD STATUS
	PIPE				
1	PIPE - A106-B PE SMLS T01AC03Z02 S-XS <PIPA010A13/4XS> (L-6679)	3/4	I132785	6.6 M	
	FITTINGS				
2	TEE ASME B16.11 3000# A105N SWE SWE - R11FNC441101 NREQD <TESA300LBK3/4> (L-179)	3/4X3/4	I1651300	1	
3	90 ELBOW ASME B16.11 3000# A105N SWE SWE - R31FNC441103 NREQD <90FA300LBK3/4> (L-178)	3/4	I1651298	4	
4	45 ELBOW ASME B16.11 3000# A105N SWE SWE - R32FNC441101 NREQD <45FA300LBK3/4> (L-184)	3/4	I1651294	1	

REMARKS FOR MECHANICAL SUBCONTRACTOR:

1) LINES 1.1/2" AND SMALLER SHALL BE SUPPORTED IN FIELD IF NOT OTHERWISE INDICATED.
2) ALL DIMENSION AND PROPER CONFIGURATION FOR LINES NPS 1.1/2" AND SMALLER SHALL BE CHECKED IN FIELD BEFORE CONSTRUCTION.
3) FOR THE COMPONENTS MARKED AS FIELD WELDED WITH THIS SYMBOL , ONE WELD FOR ADJUSTMENT OF IN LINE COMPONENT MUST BE LEFT
4) FOR EXTRA PIPE LENGTH REFER TO 4274-LZ-PC-00000603.
5) GUSSETING TO BE IMPLEMENTED BY MECHANICAL SUBCONTRACTOR AS PER 45-L-45-000-2-00-80004 / 4274-XH-SG-00000002.
6) CROSSING BETWEEN WELDS ON PIPELINE SHALL NOT BE ADMITTED.
7) IN CASE OF DISCREPANCIES BETWEEN DATA SHOWN ON ISO AND IN LINE LIST (AS APPLICABLE, DATA SHOWN IN LINE LIST GOVERN.
8) ACTUAL CUT LENGTH OF PIPE AND FIELD WELDS SHALL BE DEFINED BY MECHANICAL SUBCONTRACTOR (REF.TO 4274-LZ-PC-00000603).
9) WHERE EARTHING BONDING IS REQUIRED, MECHANICAL SUBCONTRACTOR TO PERFORM IT BASED ON DOC. 45-P-000-7-06-00902/ 4274 -NN-DW-00000002 AND ASSEMBLY NO FEA005 AND FE019.

SUPPORTS LEGEND: 1 DENOTES PARTS LIST NO — PIPE SUPPORT — A = RESTING SUPPORT G = GUIDE F = AXIAL STOP B = ANCHOR M = SPRING S = TEFLON PAD
WHERE A WITHOUT NUMBERING IS INDICATED, THIS MEANS THAT THERE IS A REST DIRECTLY ON STEEL STRUCTURE.

REV.	DESCRIPTION	DATE	DRW. BY	CHECK BY	APPR. BY	APPR. CLIENT
00	ISSUED FOR REFERENCE	02-JUN-23	U.CHAVAN	P.VAZE	G.PAGANONI	

STRESS CALC. Nº: -
P & ID: 19-A-19-000-1-01-00001 sheet 111
LINE LIST Nº: 19-L-19-000-2-00-80602
PIPE LAYOUT Nº: 19-L-19-000-2-00-86197 sheet 4

ISSUED FOR REFERENCE

Signature for construction is shown on Iso list of relevant CWA

TITLE

ISOMETRIC DRAWING LINE

3/4"-IW-91N25-B-1

PIPE MATERIAL	CS
HEAT TREATMENT (PWHT)	N
PAINTING SCHEME (3)	1
PIPING CLASS	B-1
WELDING CLASS (4)	E
PED CATEGORY	Art 4.3
INSULATION CODE / THK. (mm)	N 0

NOTES:
1. FOR TECHNICAL DETAILS SEE LINE LIST.
2. FOR VENT, DRAIN OR INSTRUMENT CONNECTION DETAILS SEE 45-L-45-000-2-00-80102.
3. WELDING ACCORDING TO 45-L-45-000-2-00-80021.
4. PAINTING ACCORDING TO 45-A-45-000-1-00-20160.
5. CODE SHOWN IN BOM BETWEEN "<" & ">" DENOTES REPSOL UNICODE. "<=N/A>" MEANS UNICODE IS "NOT AVAILABLE".

CONTRACTOR: Tecnimont

CONTRACTOR DRAWING NUMBER: 4274-XH-DL-2121IW91N25-1

PROJECT: 4001008

REPSOL

LOW LINEAL DENSITY POLYETHILENE (PEL) AND POLYPROPYLENE (PP) PLANTS FOR PROJECT - ALBA PROJECT

CLIENT / COMPLEX: REPSOL POLYMEROS/ SINES INDUSTRIAL COMPLEX

ANNEX	SPEC.	DRAWING NUMBER	REV.
19	L	19-000-2-02-00001 sheet 2121IW91N25-1	00

FILENAME: 19-000-2-02-00001 sheet 2121IW91N25-1.dwg

EXTR. DATE: 02-06-2023 13:04:49 STREAM NO.:43 STREAM REV. NO. : 9 REV. CAUSE ID:

THIS DOCUMENT BELONGS TO REPSOL. IT CAN NOT BE COPIED, REPRODUCED AND/OR USED WITHOUT PREVIOUS AUTHORIZATION OF REPSOL. COMPUTERIZED DRAWING (HANDWRITING STRICTLY FORBIDEN).