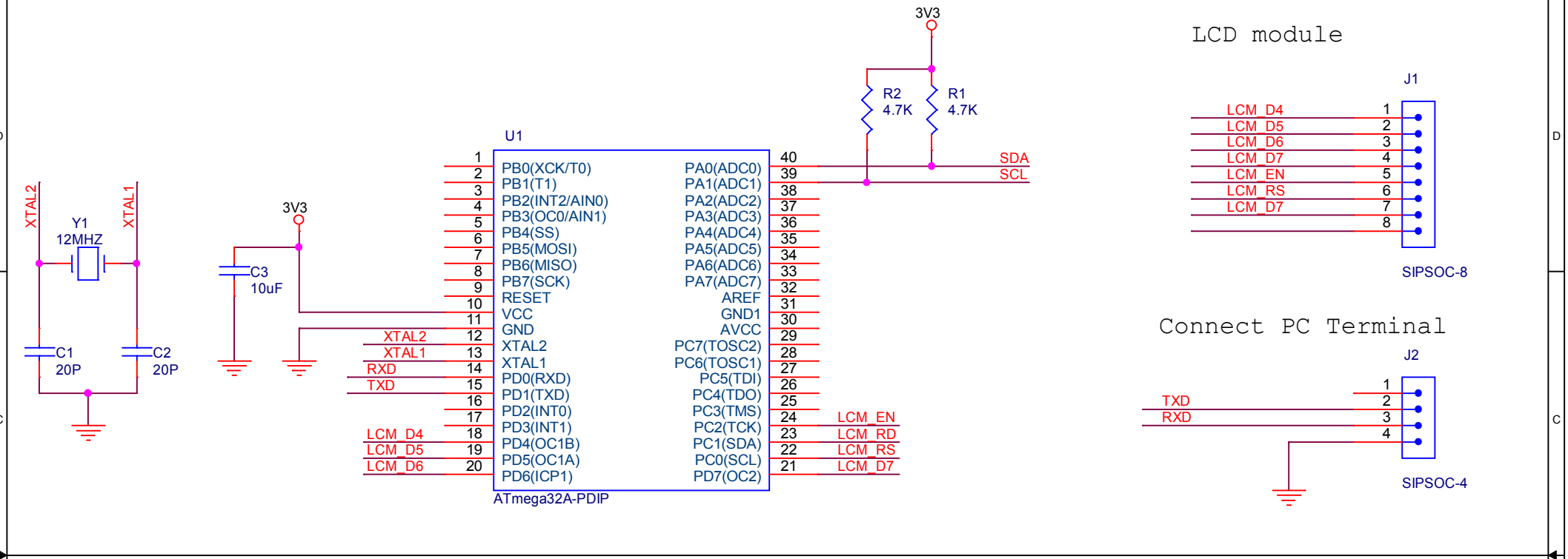

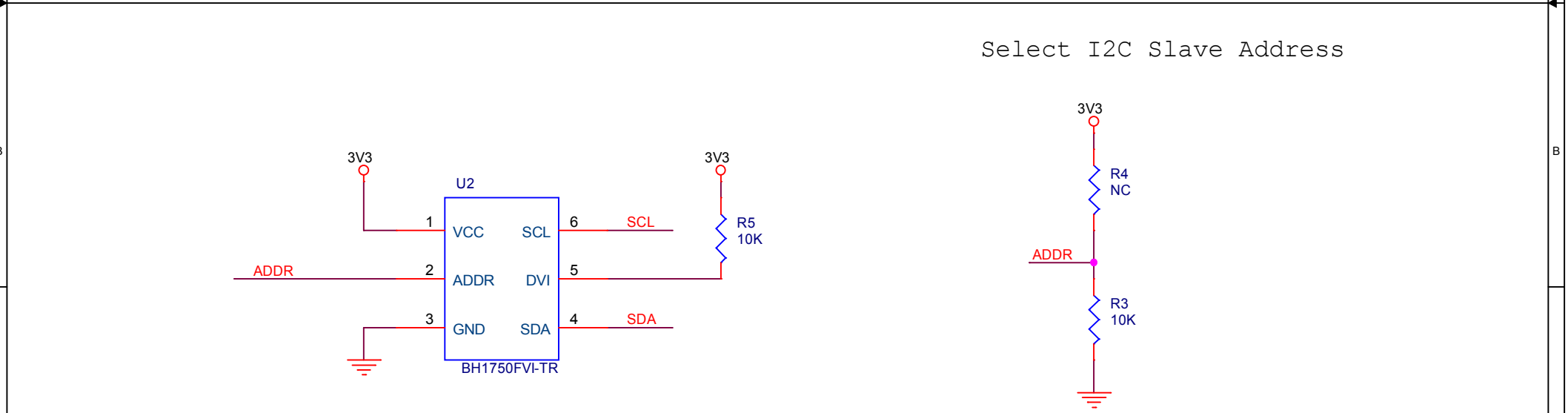

Title	BH1750FVI	
Size A	Document Number MJX4MOIS	Rev <RevCode>
Date: Sunday, April 26, 2020	Sheet 1 of 1	