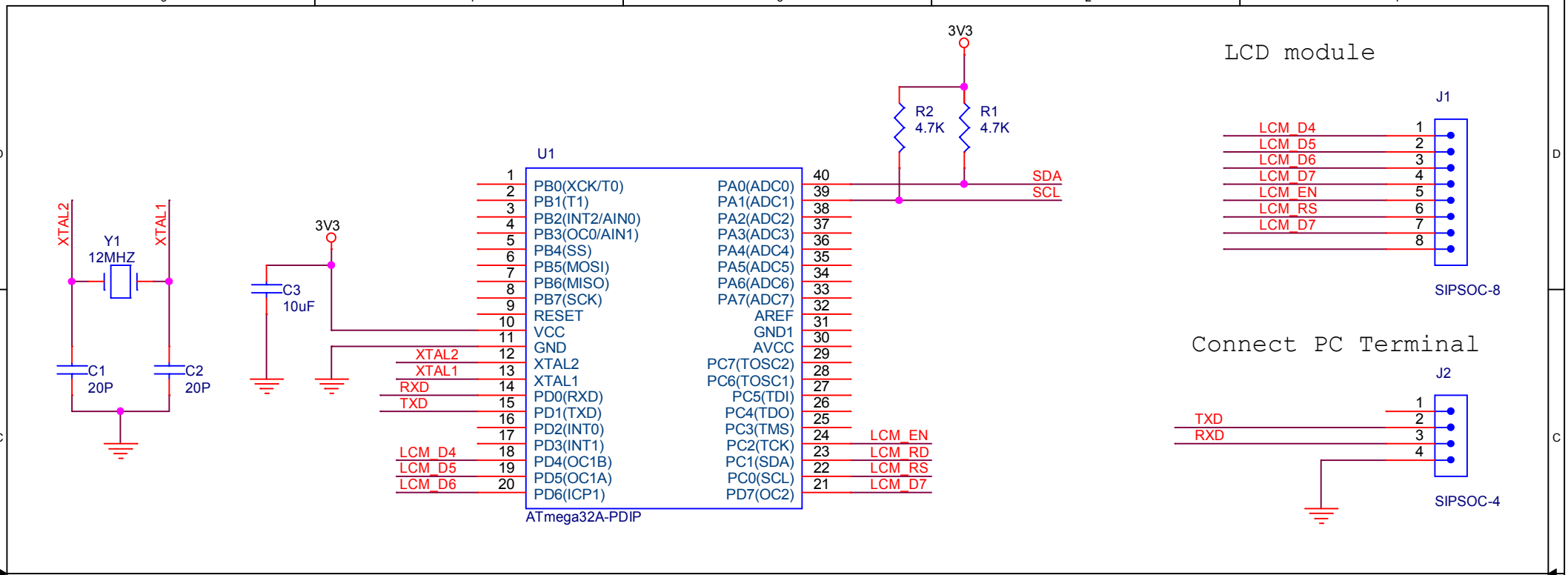

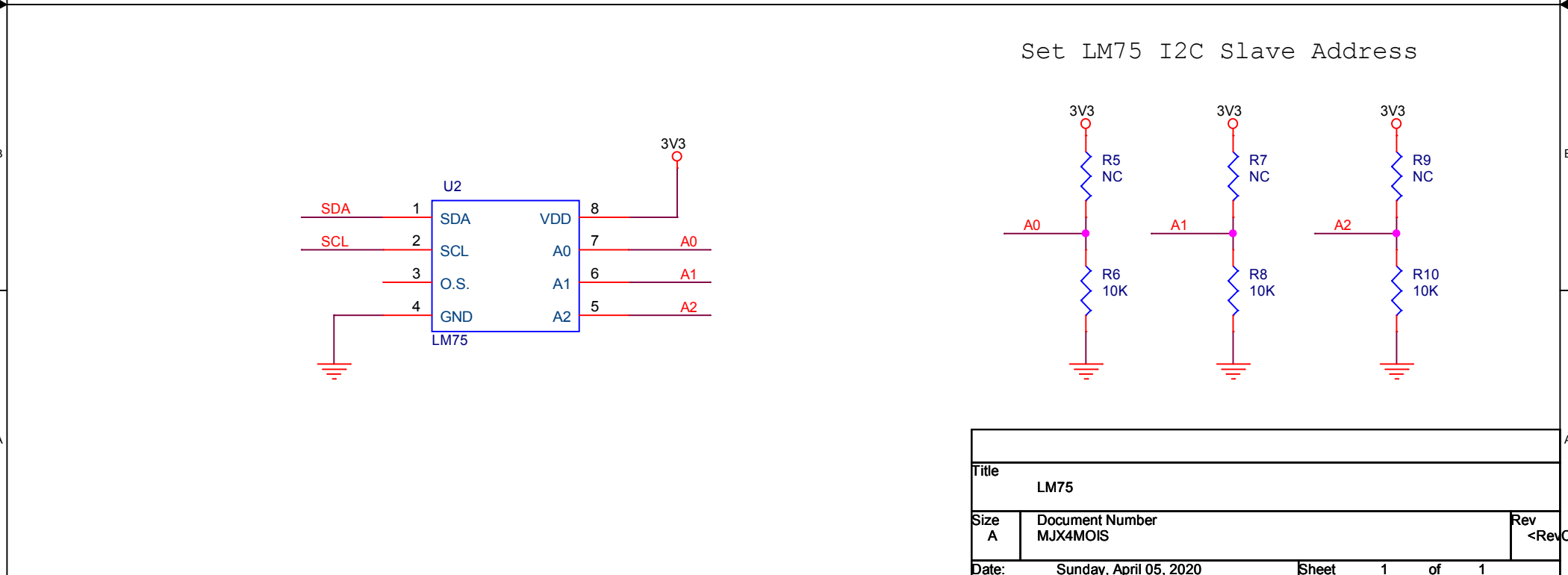

Title	LM75	
Size A	Document Number MJX4MOIS	Rev <RevCode>
Date: Sunday, April 05, 2020	Sheet 1 of 1	