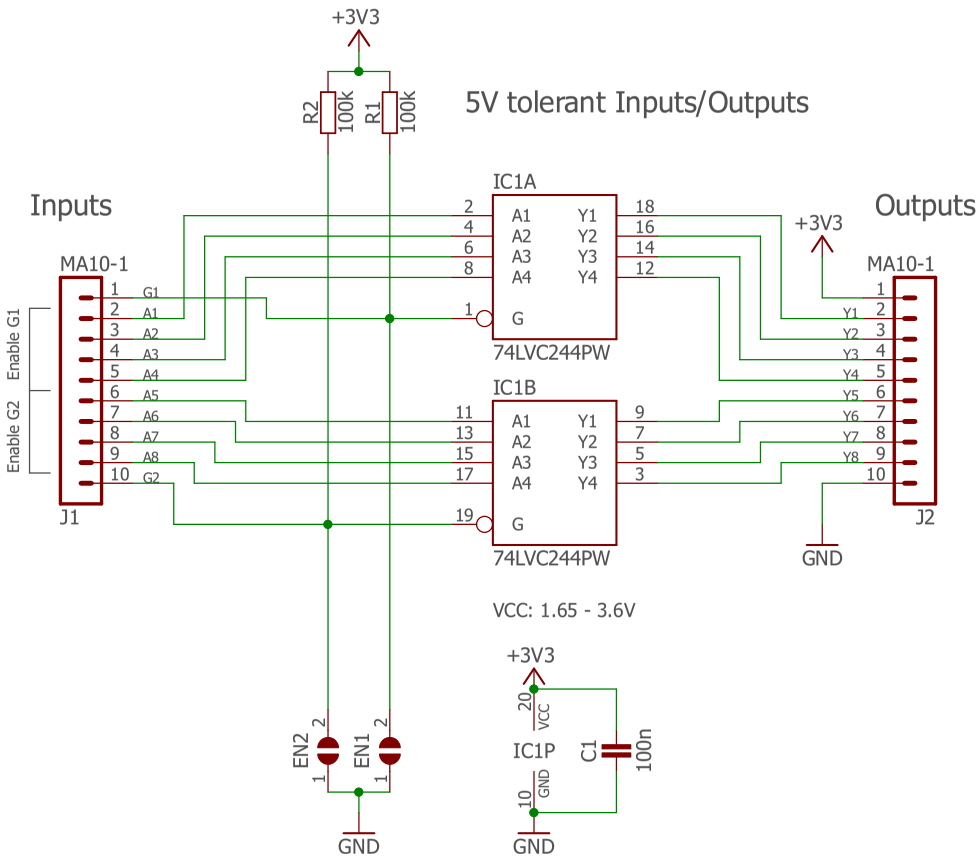

Released under the Creative Commons Attribution Share-Alike License. http://creativecommons.org/licenses/by-sa/4.0/

Designed by Andreas Watterott (Watterott electronic)

OSHW Watterott

www.watterott.com

Level-Shifter-74244_v10

20.07.2017 16:11:42

Sheet: 1/1

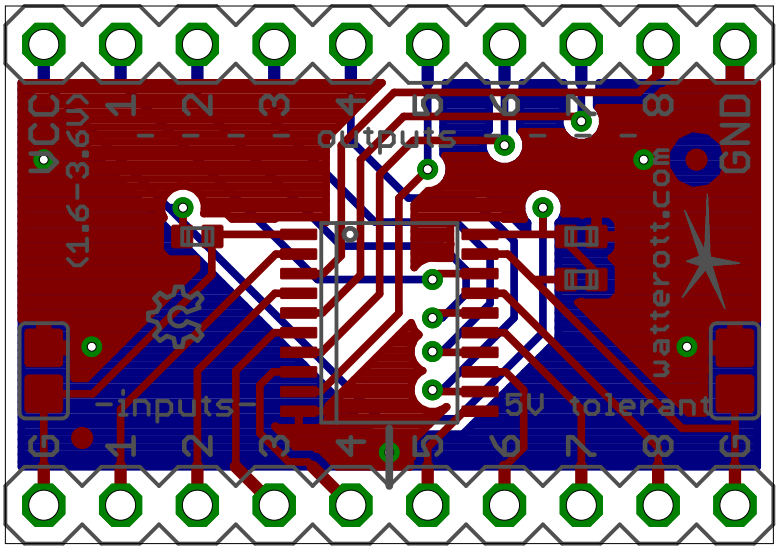
VCC
(1.6-3.6V)
1
2
3
4
outputs
5
6
7
8
GND
watterott.com
-inputs-
5V tolerant
G
1
2
3
4
5
6
7
8
G