Deep Learning for Financial Question Answering

Max Kan and Taichi Kato

Introduction: Problem

Financial documents are high-volume, complicated, with tables and figures

Current challenge: extracting **specific insights** from dense information

FORM 10-Q: What is the year-on-year revenue growth in Tesla's automotive sales? (%)

Tesla, Inc.

Notes to Consolidated Financial Statements

(unaudited)

Note 1 – Summary of Significant Accounting Policies

Unaudited Interim Financial Statements

The consolidated financial statements of Tesla, Inc. ("Tesla", the "Company", "we", "us" or "our"), including the consolidated balance sheet as of March 31, 2023, the consolidated statements of operations, the consolidated statements of comprehensive income, the consolidated statements of redeemable noncontrolling interests and equity, and the consolidated statements of cash flows for the three months ended March 31, 2023 and 2022, as well as other information disclosed in the accompanying notes, are unaudited. The consolidated balance sheet as of December 31, 2022 was derived from the audited consolidated financial statements as of that date. The interim consolidated financial statements and the accompanying notes should be read in conjunction with the annual consolidated financial statements and the accompanying notes contained in our Annual Report on Form 10-K for the year ended December 31, 2022.

The interim consolidated financial statements and the accompanying notes have been prepared on the same basis as the annual consolidated financial statements and, in the opinion of management, reflect all adjustments, which include only normal recurring adjustments, necessary for a fair statement of the results of operations for the periods presented. The consolidated results of operations for any interim period are not necessarily indicative of the results to be expected for the full year or for any other future years or interim periods.

Reclassifications

Certain prior period balances have been reclassified to conform to the current period presentation in the accompanying notes.

Revenue Recognition

Revenue by source

The following table disaggregates our revenue by major source (in millions):

	Three Months Ended March 31,	
	2023	2022
Automotive sales	$ 18,878	$ 15,514
Automotive regulatory credits	521	679
Energy generation and storage sales	1,413	503
Services and other	1,837	1,279
Total revenues from sales and services	22,649	17,975
Automotive leasing	564	668
Energy generation and storage leasing	116	113
Total revenues	$ 23,329	$ 18,756

Automotive Segment

Automotive Sales Revenue

The total sales return reserve on vehicles sold with resale value guarantees was $68 million and $91 million as of March 31, 2023 and December 31, 2022, respectively, of which $34 million and $40 million was short-term, respectively.

Deferred revenue is related to the access to our Full Self Driving ("FSD") features and ongoing maintenance, internet connectivity, free Supercharging programs and over-the-air software updates primarily on automotive sales, which amounted to $3.04 billion and $2.91 billion as of March 31, 2023 and December 31, 2022, respectively.

Deferred revenue is equivalent to the total transaction price allocated to the performance obligations that are unsatisfied, or partially unsatisfied, as of the balance sheet date. Revenue recognized from the deferred revenue balance as of December 31, 2022 and 2021 was $134 million and $66 million for three months ended March 31, 2023 and 2022, respectively. Of the total deferred revenue balance as of March 31, 2023, we expect to recognize $679 million of revenue in the next 12 months. The remaining balance will be recognized at the time of transfer of control of the product or over the performance period.

FORM 10-Q: What is the year-on-year revenue growth in Tesla's automotive sales? (%)

Tesla, Inc.
Notes to Consolidated Financial Statements
(unaudited)

Note 1 – Summary of Significant Accounting Policies

Unaudited Interim Financial Statements

The consolidated financial statements of Tesla, Inc. ("Tesla", the "Company", "we", "us" or "our"), including the consolidated balance sheet as of March 31, 2023, the consolidated statements of operations, the consolidated statements of comprehensive income, the consolidated statements of redeemable noncontrolling interests and equity, and the consolidated statements of cash flows for the three months ended March 31, 2023 and 2022, as well as other information disclosed in the accompanying notes, are unaudited. The consolidated balance sheet as of December 31, 2022 was derived from the audited consolidated financial statements as of that date. The interim consolidated financial statements and the accompanying notes should be read in conjunction with the annual consolidated financial statements and the accompanying notes contained in our Annual Report on Form 10-K for the year ended December 31, 2022.

The interim consolidated financial statements and the accompanying notes have been prepared on the same basis as the annual consolidated financial statements and, in the opinion of management, reflect all adjustments, which include only normal recurring adjustments, necessary for a fair statement of the results of operations for the periods presented. The consolidated results of operations for any interim period are not necessarily indicative of the results to be expected for the full year or for any other future years or interim periods.

Reclassifications

Certain prior period balances have been reclassified to conform to the current period presentation in the accompanying notes.

Revenue Recognition

Revenue by source

The following table disaggregates our revenue by major source (in millions):

	Three Months Ended March 31,	
	2023	2022
Automotive sales	$ 18,878	$ 15,514
Automotive regulatory credits	521	679
Energy generation and storage sales	1,413	503
Services and other	1,837	1,279
Total revenues from sales and services	22,649	17,975
Automotive leasing	564	668
Energy generation and storage leasing	116	113
Total revenues	$ 23,329	$ 18,756

Automotive Segment

Automotive Sales Revenue

The total sales return reserve on vehicles sold with resale value guarantees was $68 million and $91 million as of March 31, 2023 and December 31, 2022, respectively, of which $34 million and $40 million was short-term, respectively.

Deferred revenue is related to the access to our Full Self Driving ("FSD") features and ongoing maintenance, internet connectivity, free Supercharging programs and over-the-air software updates primarily on automotive sales, which amounted to $3.04 billion and $2.91 billion as of March 31, 2023 and December 31, 2022, respectively.

Deferred revenue is equivalent to the total transaction price allocated to the performance obligations that are unsatisfied, or partially unsatisfied, as of the balance sheet date. Revenue recognized from the deferred revenue balance as of December 31, 2022 and 2021 was $134 million and $66 million for three months ended March 31, 2023 and 2022, respectively. Of the total deferred revenue balance as of March 31, 2023, we expect to recognize $679 million of revenue in the next 12 months. The remaining balance will be recognized at the time of transfer of control of the product or over the performance period.

FORM 10-Q: What is the year-on-year revenue growth in Tesla's automotive sales? (%)

Tesla, Inc.
Notes to Consolidated Financial Statements
(unaudited)

Note 1 – Summary of Significant Accounting Policies

Unaudited Interim Financial Statements

The consolidated financial statements of Tesla, Inc. ("Tesla", the "Company", "we", "us" or "our"), including the consolidated balance sheet as of March 31, 2023, the consolidated statements of operations, the consolidated statements of comprehensive income, the consolidated statements of redeemable noncontrolling interests and equity, and the consolidated statements of cash flows for the three months ended March 31, 2023 and 2022, as well as other information disclosed in the accompanying notes, are unaudited. The consolidated balance sheet as of December 31, 2022 was derived from the audited consolidated financial statements as of that date. The interim consolidated financial statements and the accompanying notes should be read in conjunction with the annual consolidated financial statements and the accompanying notes contained in our Annual Report on Form 10-K for the year ended December 31, 2022.

The interim consolidated financial statements and the accompanying notes have been prepared on the same basis as the annual consolidated financial statements and, in the opinion of management, reflect all adjustments, which include only normal recurring adjustments, necessary for a fair statement of the results of operations for the periods presented. The consolidated results of operations for any interim period are not necessarily indicative of the results to be expected for the full year or for any other future years or interim periods.

Reclassifications

Certain prior period balances have been reclassified to conform to the current period presentation in the accompanying notes.

Revenue Recognition

Revenue by source

The following table disaggregates our revenue by major source (in millions):

	Three Months Ended March 31,	
	2023	2022
Automotive sales	$ 18,878	$ 15,514
Automotive regulatory credits	521	679
Energy generation and storage sales	1,413	503
Services and other	1,837	1,279
Total revenues from sales and services	22,649	17,975
Automotive leasing	564	668
Energy generation and storage leasing	116	113
Total revenues	$ 23,329	$ 18,756

Automotive Segment

Automotive Sales Revenue

The total ... cember 31, 2022, respectively, of which $34 million and $40 million was short-term, respectively.

Deferre... upercharging programs and over-the-air software updates primarily on automotive sales, which amounted to $3.04

18878 / 15514 = 121%

Deferred revenue is equivalent to the total transaction price allocated to the performance obligations that are unsatisfied, or partially unsatisfied, as of the balance sheet date. Revenue recognized from the deferred revenue balance as of December 31, 2022 and 2021 was $134 million and $66 million for three months ended March 31, 2023 and 2022, respectively. Of the total deferred revenue balance as of March 31, 2023, we expect to recognize $679 million of revenue in the next 12 months. The remaining balance will be recognized at the time of transfer of control of the product or over the performance period.

Previous Solutions

- **Extractive QA**
  - SQuAD Dataset: A generic QA dataset with question-answer pairs derived from Wikipedia articles
  - Transformers: T5/Roberta, etc.
  - Symbolic operators: Mathematica, Wolframalpha, etc.
- Limitations: Limited to general QA, not specific to **financial data**, structured to be extractive and not generative

---

In meteorology, precipitation is any product of the condensation of atmospheric water vapor that falls under **gravity**. The main forms of precipitation include drizzle, rain, sleet, snow, **graupel** and hail... Precipitation forms as smaller droplets coalesce via collision with other rain drops or ice crystals **within a cloud**. Short, intense periods of rain in scattered locations are called "showers".

What causes precipitation to fall?
gravity

What is another main form of precipitation besides drizzle, rain, snow, sleet and hail?
graupel

Where do water droplets collide with ice crystals to form precipitation?
within a cloud

Our Solution — Financial Numerical Reasoning Dataset

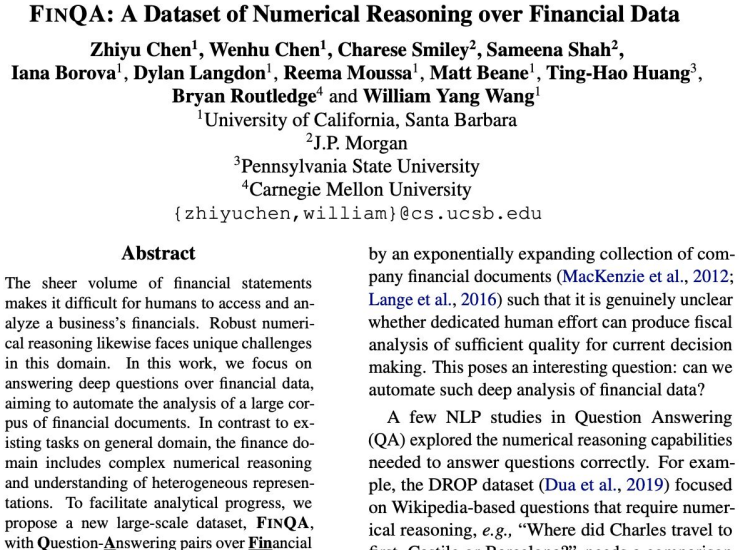

FINQA: A Dataset of Numerical Reasoning over Financial Data

Zhiyu Chen[1], Wenhu Chen[1], Charese Smiley[2], Sameena Shah[2],
Iana Borova[1], Dylan Langdon[1], Reema Moussa[1], Matt Beane[1], Ting-Hao Huang[3],
Bryan Routledge[4] and William Yang Wang[1]
[1]University of California, Santa Barbara
[2]J.P. Morgan
[3]Pennsylvania State University
[4]Carnegie Mellon University
{zhiyuchen,william}@cs.ucsb.edu

Abstract

The sheer volume of financial statements makes it difficult for humans to access and analyze a business's financials. Robust numerical reasoning likewise faces unique challenges in this domain. In this work, we focus on answering deep questions over financial data, aiming to automate the analysis of a large corpus of financial documents. In contrast to existing tasks on general domain, the finance domain includes complex numerical reasoning and understanding of heterogeneous representations. To facilitate analytical progress, we propose a new large-scale dataset, **FINQA**, with **Q**uestion-**A**nswering pairs over **Fin**ancial

by an exponentially expanding collection of company financial documents (MacKenzie et al., 2012; Lange et al., 2016) such that it is genuinely unclear whether dedicated human effort can produce fiscal analysis of sufficient quality for current decision making. This poses an interesting question: can we automate such deep analysis of financial data?

A few NLP studies in Question Answering (QA) explored the numerical reasoning capabilities needed to answer questions correctly. For example, the DROP dataset (Dua et al., 2019) focused on Wikipedia-based questions that require numerical reasoning, *e.g.,* "Where did Charles travel to

Dataset: Modified FinQA - comprehensive for financial Q&A (Chen et. al 2021)

Contains earnings reports of S&P 500 companies, 8,281 Q&A pairs

Numerical reasoning processes included

Our Solution — Generative QA

For our task, we need to generate/synthesize a solution based on the given context, but we may not be able to find an exact solution in the context. So our task is inherently a generative task.

We can define the task as modelling the mapping between context/question pair with an answer.

The most common model for these tasks is generally known as causal language models, and the most popular example of it is GPT.

Data Pre-processing

Context

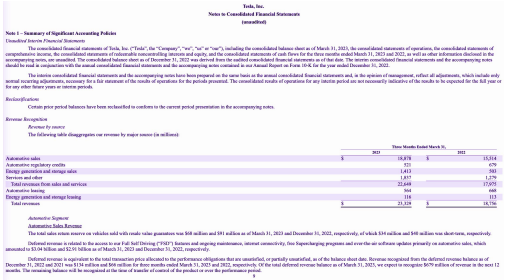

Tesla, Inc.
Notes to Consolidated Financial Statements
(unaudited)

Note 1 – Summary of Significant Accounting Policies

Unaudited Interim Financial Statements

The consolidated financial statements of Tesla, Inc. ("Tesla", the "Company", "we", "us" or "our"), including the consolidated balance sheet as of March 31, 2023, the consolidated statements of operations, the consolidated statements of comprehensive income, the consolidated statements of redeemable noncontrolling interests and equity, and the consolidated statements of cash flows for the three months ended March 31, 2023 and 2022, as well as other information disclosed in the accompanying notes, are unaudited. The consolidated balance sheet as of December 31, 2022 was derived from the audited consolidated financial statements as of that date. The interim consolidated financial statements and the accompanying notes should be read in conjunction with the annual consolidated financial statements and the accompanying notes contained in our Annual Report on Form 10-K for the year ended December 31, 2022.

The interim consolidated financial statements and the accompanying notes have been prepared on the same basis as the annual consolidated financial statements and, in the opinion of management, reflect all adjustments, which include only normal recurring adjustments, necessary for a fair statement of the results of operations for the periods presented. The consolidated results of operations for any interim period are not necessarily indicative of the results to be expected for the full year or for any other future years or interim periods.

Reclassifications

Certain prior period balances have been reclassified to conform to the current period presentation in the accompanying notes.

Revenue Recognition

Revenue by source

The following table disaggregates our revenue by major source (in millions).

	Three Months Ended March 31,	
	2023	2022
Automotive sales	$ 18,878	$ 15,514
Automotive regulatory credits	521	679
Energy generation and storage sales	1,813	1,279
Services and other	1,437	1,294
Total revenues from sales and services	22,649	17,973
Automotive leasing	564	660
Energy generation and storage leasing	116	113
Total revenues	$ 23,329	$ 18,746

Automotive Segment

Automotive Sales Revenue

The total sales return reserve on vehicles sold with resale value guarantees was $68 million and $91 million as of March 31, 2023 and December 31, 2022, respectively, of which $34 million and $40 million was short-term, respectively.

Deferred revenue is related to the access to our Full Self Driving ("FSD") features and ongoing maintenance, internet connectivity, free Supercharging programs and over-the-air software updates primarily on automotive sales, which amounted to $3.04 billion and $2.91 billion as of March 31, 2023 and December 31, 2022, respectively.

Deferred revenue is equivalent to the total transaction price allocated to the performance obligations that are unsatisfied, or partially unsatisfied, as of the balance sheet date. Revenue recognized from the deferred revenue balance as of December 31, 2022 and 2021 was $134 million and $66 million for three months ended March 31, 2023 and 2022, respectively. Of the total deferred revenue balance as of March 31, 2023, we expect to recognize $679 million of revenue in the next 12 months. The remaining balance will be recognized at the time of transfer of control of the product or over the performance period.

9

Question

what was the the interest expense in 2009?

Answer

380 million

Numerical reasoning

3.8m / 1% = 380m

Data Pre-processing

Context

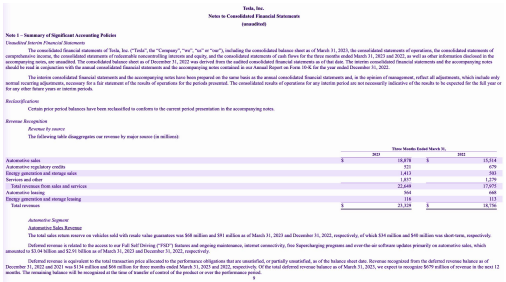

Tesla, Inc.
Notes to Consolidated Financial Statements
(unaudited)

Note 1 – Summary of Significant Accounting Policies

Unaudited Interim Financial Statements

The consolidated financial statements of Tesla, Inc. ("Tesla", the "Company", "we", "us" or "our"), including the consolidated balance sheet as of March 31, 2023, the consolidated statements of operations, the consolidated statements of comprehensive income, the consolidated statements of redeemable noncontrolling interests and equity, and the consolidated statements of cash flows for the three months ended March 31, 2023 and 2022, as well as other information disclosed in the accompanying notes, are unaudited. The consolidated balance sheet as of December 31, 2022 was derived from the audited consolidated financial statements as of that date. The interim consolidated financial statements and the accompanying notes should be read in conjunction with the annual consolidated financial statements and the accompanying notes contained in our Annual Report on Form 10-K for the year ended December 31, 2022.

The interim consolidated financial statements and the accompanying notes have been prepared on the same basis as the annual consolidated financial statements and, in the opinion of management, reflect all adjustments, which include only normal recurring adjustments, necessary for a fair statement of the results of operations for the periods presented. The consolidated results of operations for any interim period are not necessarily indicative of the results to be expected for the full year or for any other future years or interim periods.

Reclassifications

Certain prior period balances have been reclassified to conform to the current period presentation in the accompanying notes.

Revenue Recognition

Revenue by source

The following table disaggregates our revenue by major source (in millions):

	Three Months Ended March 31,	
	2023	2022
Automotive sales	$ 18,878	$ 15,514
Automotive regulatory credits	521	679
Energy generation and storage sales	1,413	583
Services and other	1,817	1,279
Total revenues from sales and services	22,649	17,975
Automotive leasing	564	668
Energy generation and storage leasing	116	113
Total revenues	$ 23,329	$ 18,756

Automotive Segment

Automotive Sales Revenue

The total sales return reserve on vehicles sold with resale value guarantees was $68 million and $91 million as of March 31, 2023 and December 31, 2022, respectively, of which $34 million and $48 million was short-term, respectively.

Deferred revenue is related to the access to our Full Self Driving ("FSD") features and ongoing maintenance, internet connectivity, free Supercharging programs and over-the-air software updates primarily on automotive sales, which amounted to $3.04 billion and $2.91 billion as of March 31, 2023 and December 31, 2022, respectively.

Deferred revenue is equivalent to the total transaction price allocated to the performance obligations that are unsatisfied, or partially unsatisfied, as of the balance sheet date. Revenue recognized from the deferred revenue balance as of December 31, 2022 and 2021 was $134 million and $66 million for three months ended March 31, 2023 and 2022, respectively. Of the total deferred revenue balance as of March 31, 2023, we expect to recognize $679 million of revenue in the next 12 months. The remaining balance will be recognized at the time of transfer of control of the product or over the performance period.

Question

what was the the interest expense in 2009?

Answer

380 million

Numerical reasoning

3.8m / 1% = 380m


```
{"prompt":"Interest rate to a variable interest rate based on the three-month libor plus 2.05% ( 2.05 % ) ( 2.34% ( 2.34 % ) as of october 31 , 2009 ) .\nif libor changes by 100 basis points , our annual interest expense would change by $ 3.8 million .\nforeign currency exposure as more fully described in note 2i .\nin the notes to consolidated financial statements contained in item 8 of this annual report on form 10-k , we regularly hedge our non-u.s .\ndollar-based exposures by entering into forward foreign currency exchange contracts .\nthe terms of these contracts are for periods matching the duration of

…….

"$ 6427\", \"$ -23158 ( 23158 )\"], [\"fair value of forward exchange contracts after a 10% ( 10 % ) unfavorable movement in foreign currency exchange rates asset ( liability )\", \"$ 20132\", \"$ -9457 ( 9457 )\"], [\"fair value of forward exchange contracts after a 10% ( 10 % ) favorable movement in foreign currency exchange rates liability\", \"$ -6781 ( 6781 )\", \"$ -38294 ( 38294 )\"]]\n

q: what was the the interest expense in 2009?,

"completion":" a: 380 million"}
```

Fine-tuning with pre-trained LLM

ModFinQA PROMPTS

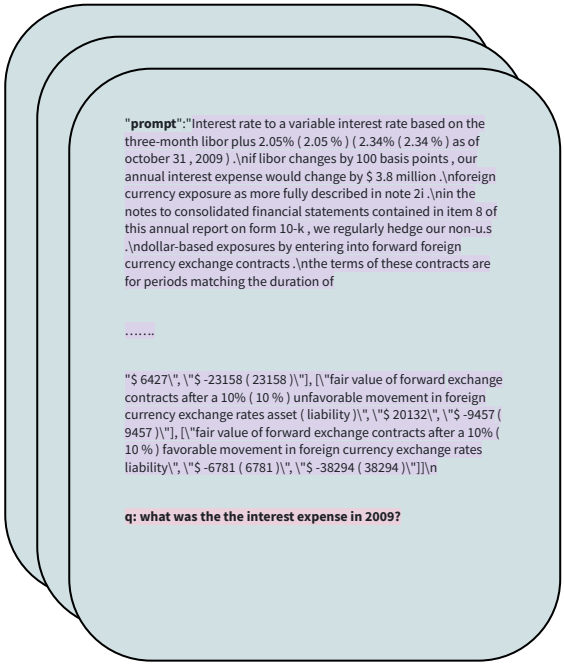

Fine-tuning with pre-trained LLM

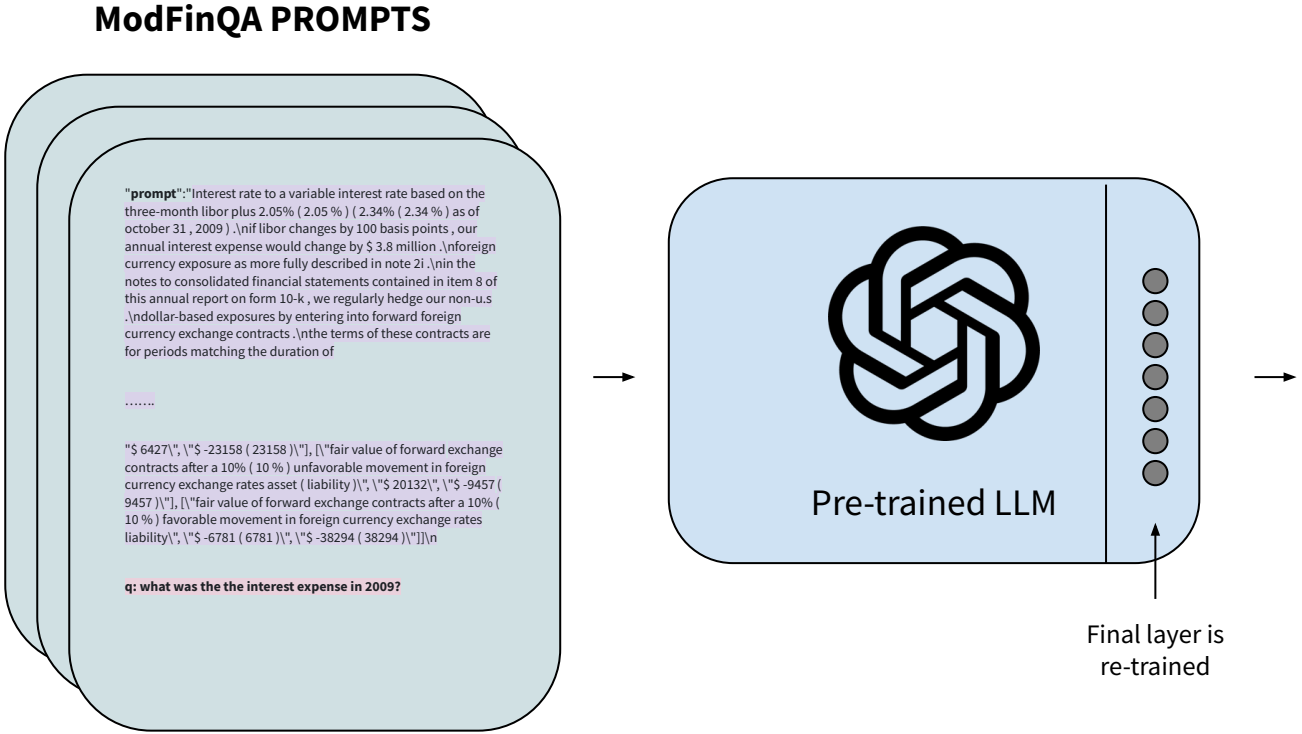

Fine-tuning with pre-trained LLM

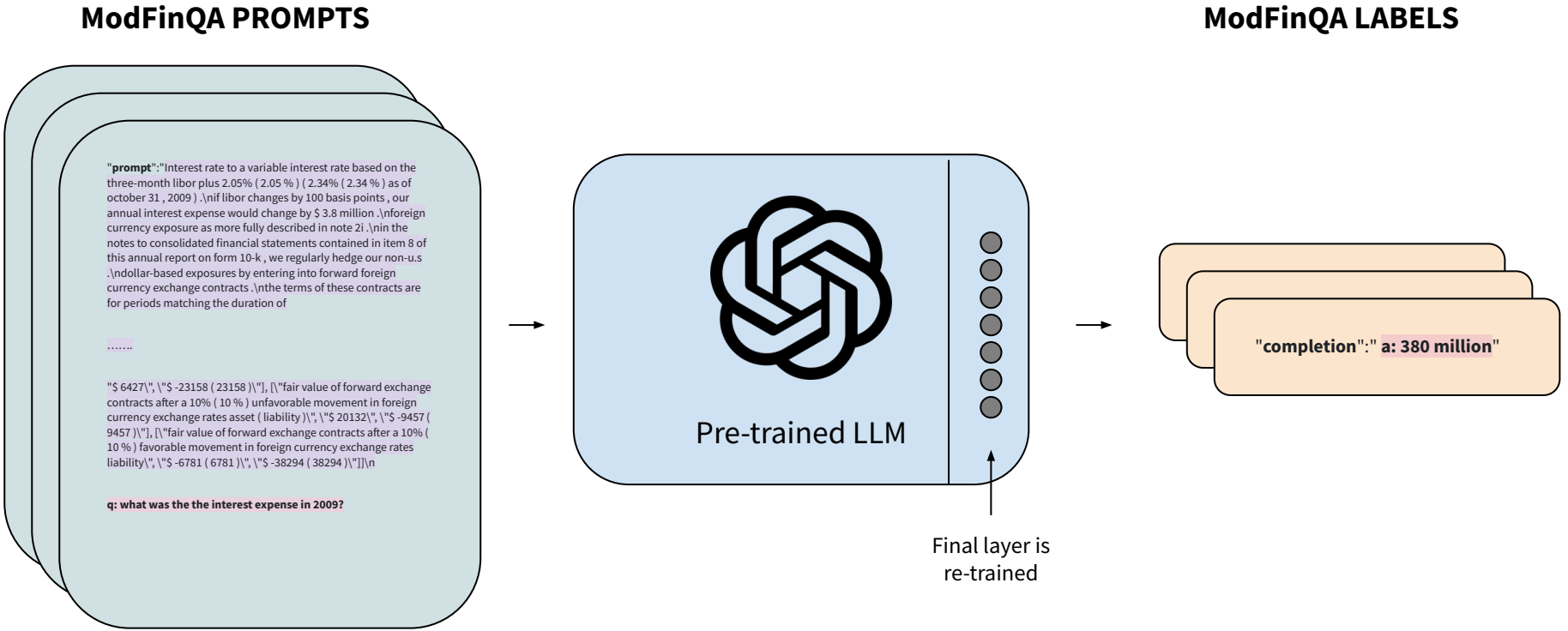

Our Solution — Models/Evaluation

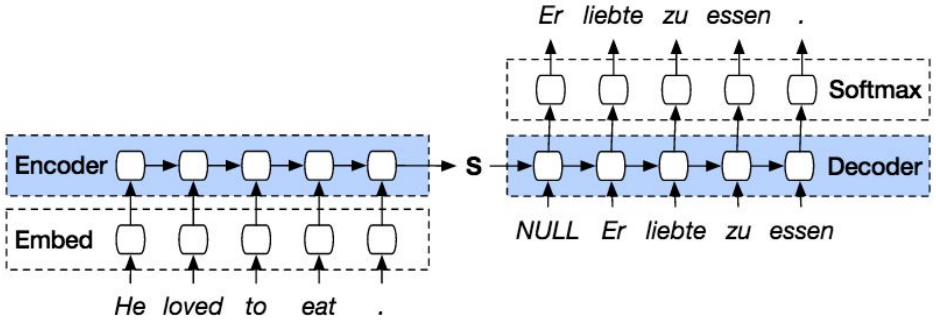

seq2seq

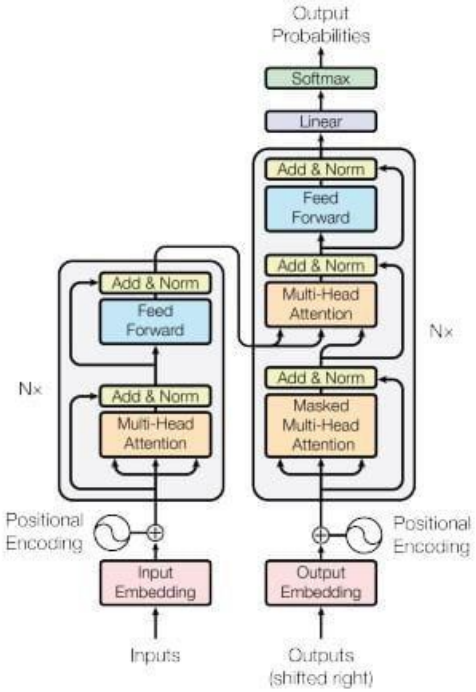

transformers

Our Solution — Models/Evaluation

- Initial benchmark model: seq2seq (**9%** accuracy)
- Improved model: fine-tuned t5-small (**--%** accuracy: generated empty tokens)
- Fine-tuned GPT-3 based model, more sophisticated, better performance (**~55%** accuracy)
- SOTA: FinQANet-Gold (RoBERTa-large): 68.76
- **uman Performance: 50.68**
- **Peak (goated, expert, etc.) human performance: 91.16**

Our Solution — Conclusion

- Fully neural-network based solution still suffers from hallucinations/miscalculations
- Probably best to combine these models with symbolic programs like Wolfram Alpha
- A good article: https://writings.stephenwolfram.com/2023/02/what-is-chatgpt-doing-and-why-does-it-work/
- But the remarkable—and unexpected—thing is that this process can produce text that's successfully "like" what's out there on the web, in books, etc. And not only is it coherent human language, it also "says things" that "follow its prompt" making use of content it's "read". It doesn't always say things that "globally make sense" (or correspond to correct computations)—because (without, for example, accessing the "computational superpowers" of Wolfram|Alpha) it's just saying things that "sound right" based on what things "sounded like" in its training material.