Mieszko Karski 419972
Mechatronic engineering, group 1

Service robots

Mechanical arm

I. State of art

Description

While the mechanical concept of a robot arm is well-established, it is a highly versatile device allowing for full customisation depending on the user's needs. A 5 DOF arm presented below carries out complex, dangerous or precise actions swiftly and safely. The manipulator makes automation of diverse processes possible, requiring little to no human supervision, making it perfect for a variety of uses.

Advantages

- **High precision and reliability** – ensures consistent accuracy during compounding operations, while the kinematic design provides a sufficient workspace range;
- **Operator safety** – hazardous actions may be performed remotely or completely automatically;
- **Efficiency** – allows continuous work with minimal supervision.

Disadvantages

- **Limited dexterity** – though mobility for a 5 DOF manipulator is quite high, it does have its boundaries;
- **High cost** – manufacturing, installing and maintenance costs are high if precision is valued;
- **Maintenance complexity** – requires specialised servicing and calibration to maintain performance.

Examples of use

The manipulator can be used in any space where precision is required (e.g. laboratories), there is danger of hazardous materials (e.g. hospitals) and/or the actions are repetitive and can be fully automated (e.g. factories).

Specific example

Two such manipulators are used in KIRO Oncology, a multipurpose device designed to automatically prepare cytostatic medicine, ensuring each dose is precisely tailored to the patient's individual needs and reducing the risk of exposure to dangerous substances by the staff.

Source: https://www.kirogrifols.com/products/kiro-oncology/

II. Forward kinematics

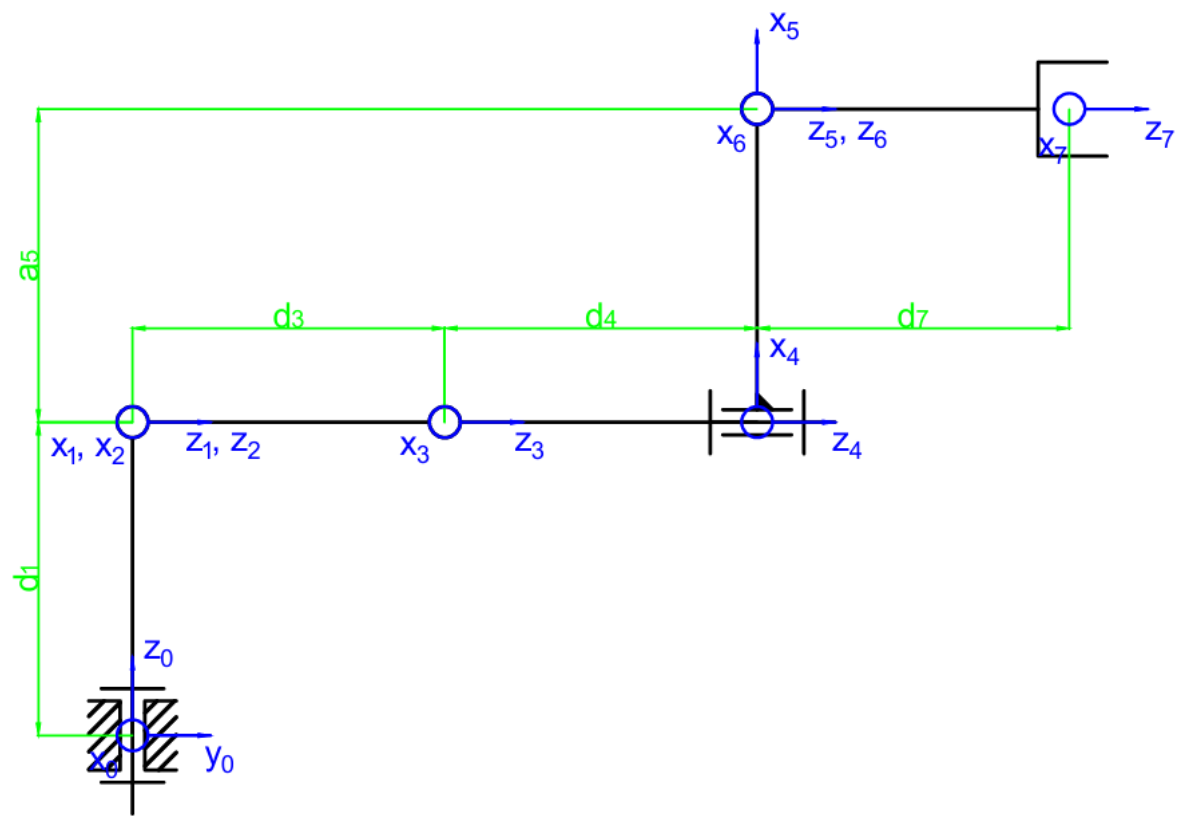

Kinematic scheme

Denavit-Hartenberg notation

Based on the scheme above, the following table was deduced:

	θ_i	d_i	a_i	α_i
1	θ_1^{var}	d_1	–	-90°
2	–	–	–	α_2^{var}
3	–	d_3	–	α_3^{var}
4	- 90°	d_4	–	–
5	θ_5^{var}	–	a_5	–
6	90°	–	–	α_6^{var}
7	–	d_7	–	–

The general formula:

$$T_{i0} = A_1 A_2 A_3 \ldots A_i = \begin{bmatrix} r_{x1} & r_{x2} & r_{x3} & p_x \\ r_{y1} & r_{y2} & r_{y3} & p_y \\ r_{z1} & r_{z2} & r_{z3} & p_z \\ 0 & 0 & 0 & 1 \end{bmatrix}$$

where:

$$A_i = Rot\,(z,\,\theta_i) \cdot Trans\,(0,0,d_i) \cdot Trans\,(a_i,0,0) \cdot Rot\,(x,\,\alpha_i) =$$

$$= \begin{bmatrix} \cos(\theta_i) & -\sin(\theta_i)\cos(\alpha_i) & \sin(\theta_i)\sin(\alpha_i) & a_i\cos(\theta_i) \\ \sin(\theta_i) & \cos(\theta_i)\cos(\alpha_i) & -\cos(\theta_i)\sin(\alpha_i) & a_i\sin(\theta_i) \\ 0 & \sin(\alpha_i) & \cos(\alpha_i) & d_i \\ 0 & 0 & 0 & 1 \end{bmatrix}$$

For the presented system:

$$A_1 = \begin{bmatrix} \cos(\theta_1) & 0 & -\sin(\theta_1) & 0 \\ \sin(\theta_1) & 0 & \cos(\theta_1) & 0 \\ 0 & -1 & 0 & d_1 \\ 0 & 0 & 0 & 1 \end{bmatrix} \quad A_2 = \begin{bmatrix} 1 & 0 & 0 & 0 \\ 0 & \cos(\alpha_2) & -\sin(\alpha_2) & 0 \\ 0 & \sin(\alpha_2) & \cos(\alpha_2) & 0 \\ 0 & 0 & 0 & 1 \end{bmatrix}$$

$$A_3 = \begin{bmatrix} 1 & 0 & 0 & 0 \\ 0 & \cos(\alpha_3) & -\sin(\alpha_3) & 0 \\ 0 & \sin(\alpha_3) & \cos(\alpha_3) & d_3 \\ 0 & 0 & 0 & 1 \end{bmatrix} \quad A_4 = \begin{bmatrix} 0 & 1 & 0 & 0 \\ -1 & 0 & 0 & 0 \\ 0 & 0 & 1 & d_4 \\ 0 & 0 & 0 & 1 \end{bmatrix}$$

$$A_5 = \begin{bmatrix} \cos(\theta_5) & -\sin(\theta_5) & 0 & a_5\cos(\theta_5) \\ \sin(\theta_5) & \cos(\theta_5) & 0 & a_5\sin(\theta_5) \\ 0 & 0 & 1 & 0 \\ 0 & 0 & 0 & 1 \end{bmatrix} \quad A_6 = \begin{bmatrix} 0 & -\cos(\alpha_6) & \sin(\alpha_6) & 0 \\ 1 & 0 & 0 & 0 \\ 0 & \sin(\alpha_6) & \cos(\alpha_6) & 0 \\ 0 & 0 & 0 & 1 \end{bmatrix}$$

$$A_7 = \begin{bmatrix} 1 & 0 & 0 & 0 \\ 0 & 1 & 0 & 0 \\ 0 & 0 & 1 & d_7 \\ 0 & 0 & 0 & 1 \end{bmatrix}$$

Now, to obtain T_{70}, all these matrices need to be multiplied. For clarity, the following abbreviations were used:

$$s_i = \sin(\theta_i),\ c_i = \cos(\theta_i),$$
$$s_{ij} = \sin(\alpha_i + \alpha_j),\ c_{ij} = \cos(\alpha_i + \alpha_j).$$

$$T_{70} = \begin{bmatrix} r_{x1} & r_{x2} & r_{x3} & p_x \\ r_{y1} & r_{y2} & r_{y3} & p_y \\ r_{z1} & r_{z2} & r_{z3} & p_z \\ 0 & 0 & 0 & 1 \end{bmatrix},$$

where:

$$\begin{aligned}
r_{x1} &= c_1 c_5 - s_1 s_{23} s_5 \\
r_{x2} &= -c_6(c_1 s_5 + s_1 s_{23} c_5) - s_1 c_{23} s_6 \\
r_{x3} &= s_6(c_1 s_5 + s_1 s_{23} c_5) - s_1 c_{23} c_6 \\
r_{y1} &= s_1 c_5 + c_1 s_{23} s_5 \\
r_{y2} &= c_6(c_1 s_{23} c_5 - s_1 s_5) + c_1 c_{23} s_6 \\
r_{y3} &= s_6(s_1 s_5 - c_1 s_{23} c_5) + c_1 c_{23} c_6 \\
r_{z1} &= -c_{23} s_5 \\
r_{z2} &= s_{23} s_6 - c_{23} c_5 c_6 \\
r_{z3} &= c_{23} c_5 s_6 + s_{23} c_6
\end{aligned}$$

$$\begin{aligned}
p_x &= (s_6 d_7 + a_5)(c_1 s_5 + s_1 s_{23} c_5) - s_1 c_{23}(c_6 d_7 + d_4) - d_3 s_1 c_2 \\
p_y &= (s_6 d_7 + a_5)(s_1 s_5 - c_1 s_{23} c_5) + c_1 c_{23}(c_6 d_7 + d_4) + d_3 c_1 c_2 \\
p_z &= c_{23} c_5 (s_6 d_7 + a_5) + s_{23}(c_6 d_7 + d_4) + d_3 s_2 + d_1
\end{aligned}$$

To confirm these equations, all lengths were assumed to be 1 and a few positions were checked in MATLAB:

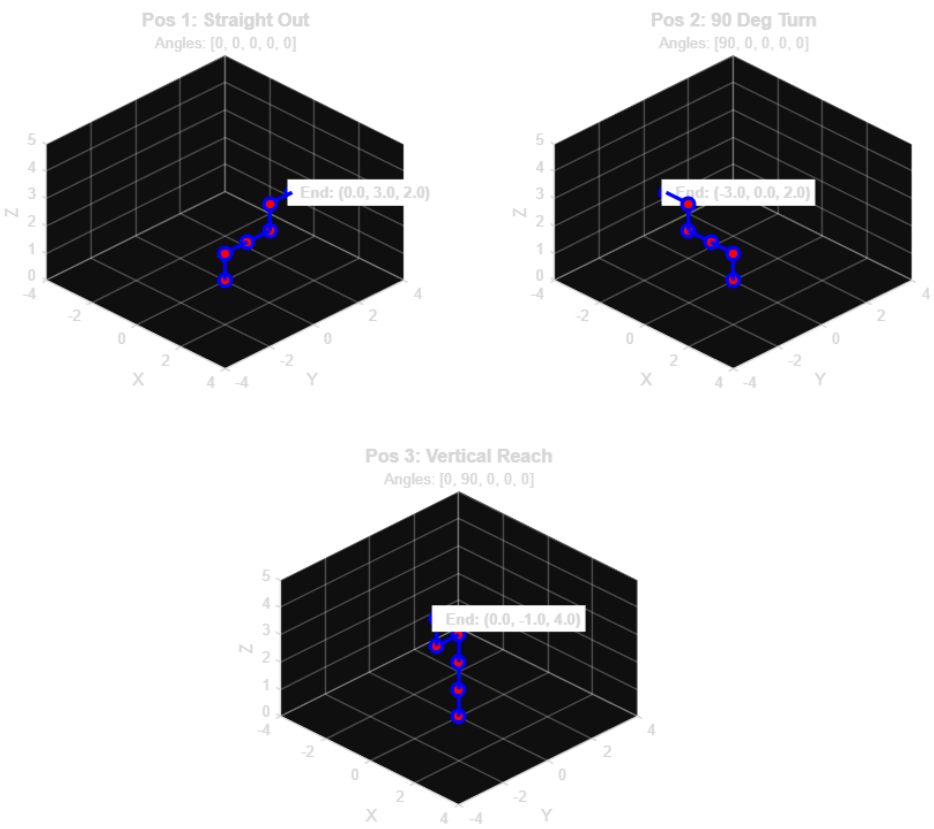

III. Inverse kinematics

Inverse kinematics is the opposite of forward kinematics. It is assumed the final T_{70} matrix is known and the goal is to find the variable values. The problematic part is that while a specific set of variables may produce only one result matrix, a single matrix may be achieved by many - in this case infinite - sets of angles. This happens because some rotations are along the same axis, e.g. in this case, if α_2 is 90°, then θ_1 and θ_5 can rotate to cancel each other out. That is why, when solving the sets of equations it is important to set some boundaries for the angles.

IV. Forward and inverse kinematics confirmation

To confirm the validity of the results, a MATLAB code was used to calculate FK and IK for 5 different positions and checked with the use of the model (part V).

Forward kinematics code

```
clear; clc;

% Manipulator parameters
d1 = 331;
d3 = 290;
d4 = 306;
a5 = 0;
d7 = 55.5;

% Variables
th1_deg = 0;
al2_deg = 0;
al3_deg = 0;
th5_deg = 0;
al6_deg = 0;
th1 = deg2rad(th1_deg);
al2 = deg2rad(al2_deg);
al3 = deg2rad(al3_deg);
th5 = deg2rad(th5_deg);
al6 = deg2rad(al6_deg);

% Matrices
A1 = [cos(th1)    0    -sin(th1)     0;
     sin(th1)    0     cos(th1)     0;
          0     -1            0    d1;
          0      0            0     1];
A2 = [1          0            0     0;
     0   cos(al2)    -sin(al2)     0;
     0   sin(al2)     cos(al2)     0;
     0          0            0     1];
A3 = [1          0            0     0;
     0   cos(al3)    -sin(al3)     0;
```

```
     0  sin(al3)    cos(al3)   d3;
     0         0           0    1];
A4 = [ 0   1   0    0;
     -1   0   0    0;
      0   0   1   d4;
      0   0   0    1];
A5 = [cos(th5)  -sin(th5)   0   a5*cos(th5);
     sin(th5)   cos(th5)   0   a5*sin(th5);
            0          0   1             0;
            0          0   0             1];
A6 = [0  -cos(al6)   sin(al6)   0;
     1          0          0   0;
     0   sin(al6)   cos(al6)   0;
     0          0          0   1];
A7 = [1   0   0    0;
     0   1   0    0;
     0   0   1   d7;
     0   0   0    1];

% Final matrix
T70 = A1 * A2 * A3 * A4 * A5 * A6 * A7;

% Results
fprintf('END-EFFECTOR POSITION:\n');
fprintf('X: %.4f mm\n', T70(1,4));
fprintf('Y: %.4f mm\n', T70(2,4));
fprintf('Z: %.4f mm\n', T70(3,4));
```

Inverse kinematics code

```
clear; clc;

% Manipulator parameters
d1 = 331;
d3 = 290;
d4 = 306;
a5 = 0;
d7 = 55.5;

% Target matrix
T_target = [
   1   0    0   0;
   0   0    1   651.5;
   0   -1   0   331;
   0   0    0   1.0000
];
x0 = T_target(1,4);
y0 = T_target(2,4);
z0 = T_target(3,4);
```

```
ax = T_target(1,3);
ay = T_target(2,3);
az = T_target(3,3);

% Theta 1 calculation
th1_val = atan2d(-x0, y0);

% Other angles calculation\
syms a2 a3 t5 a6 real
t1 = deg2rad(th1_val);
s1 = sin(t1); c1 = cos(t1);
s2 = sin(a2); c2 = cos(a2);
s23 = sin(a2+a3); c23 = cos(a2+a3);
s5 = sin(t5); c5 = cos(t5);
s6 = sin(a6); c6 = cos(a6);
eq_r13 = (c1*s5 + s1*s23*c5)*s6 + s1*c23*c6 == ax;
eq_r33 = c23*c5*s6 - s23*c6 == az;
eq_x = (s6*d7 + a5)*(c1*s5 + s1*s23*c5) - s1*c23*(c6*d7 + d4) - d3*s1*c2 ==
x0;
eq_y = (s6*d7 + a5)*(s1*s5 - c1*s23*c5) + c1*c23*(c6*d7 + d4) + d3*c1*c2 ==
y0;
eq_z = c23*c5*(s6*d7 + a5) + s23*(c6*d7 + d4) + d3*s2 + d1 == z0;
range = [-pi pi; -pi pi; -pi pi; -pi pi];
S = vpasolve([eq_x, eq_z, eq_r13, eq_r33], [a2, a3, t5, a6], range);

% Results
if isempty(S.a2)
   fprintf('No solution found\n');
else
   a2_deg = double(rad2deg(S.a2));
   a3_deg = double(rad2deg(S.a3));
   t5_deg = double(rad2deg(S.t5));
   a6_deg = double(rad2deg(S.a6));
   fprintf('SOLUTION:\n');
   fprintf('Theta 1:    %.2f deg\n', th1_val);
   fprintf('Alpha 2:    %.2f deg\n', a2_deg);
   fprintf('Alpha 3:    %.2f deg\n', a3_deg);
   fprintf('Theta 5:    %.2f deg\n', t5_deg);
   fprintf('Alpha 6:    %.2f deg\n', a6_deg);
end
```

Both codes were checked for 5 positions and the results are seen below. The model results may differ slightly because of simplification of the model's geometry in the calculations.

Position 1

Assumed variables	$\theta_1 = 0°$ $\alpha_2 = 0°$ $\alpha_3 = 0°$ $\theta_5 = 0°$ $\alpha_6 = 0°$
Forward kinematics result	END-EFFECTOR POSITION: X: 0.0000 mm Y: 651.5000 mm Z: 331.0000 mm
Inverse kinematics result	SOLUTION: Theta 1: 0.00 deg Alpha 2: 0.00 deg Alpha 3: 0.00 deg Theta 5: 0.00 deg Alpha 6: 0.00 deg

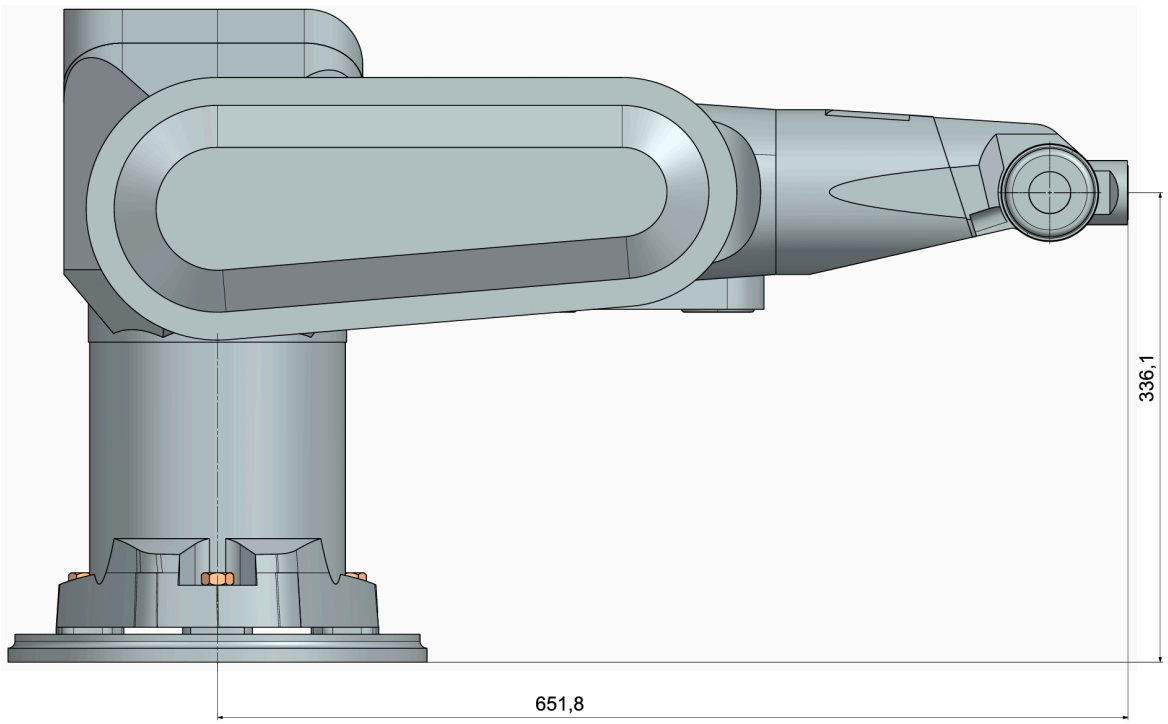

Position 2

Assumed variables	$\theta_1 = 0°$ $\alpha_2 = 90°$ $\alpha_3 = 0°$ $\theta_5 = 0°$ $\alpha_6 = 0°$
Forward kinematics result	END-EFFECTOR POSITION: X: 0.0000 mm Y: 0.0000 mm Z: 982.5000 mm
Inverse kinematics result	SOLUTION: Theta 1: 0.00 deg Alpha 2: 90.00 deg Alpha 3: 0.00 deg Theta 5: 0.00 deg Alpha 6: 0.00 deg

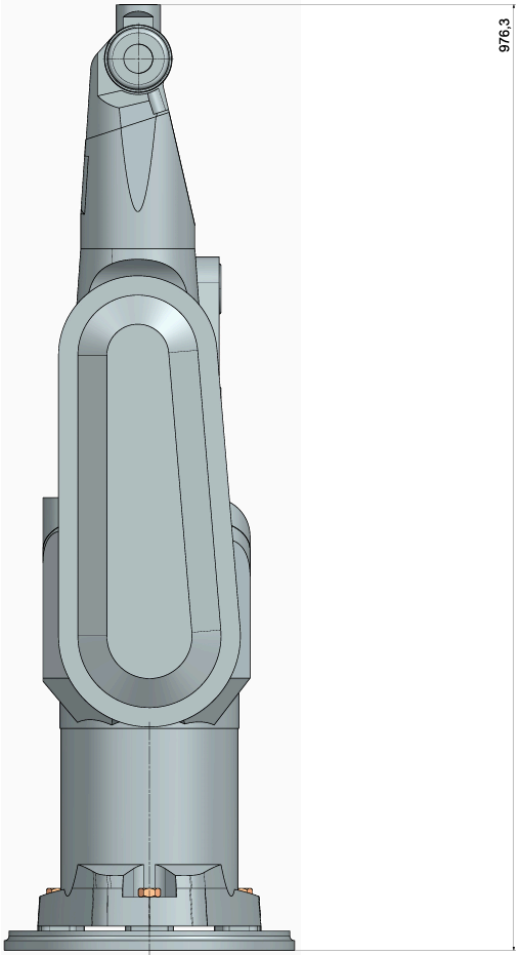

Position 3

Assumed variables	$\theta_1 = 0°$ $\alpha_2 = 0°$ $\alpha_3 = 90°$ $\theta_5 = -90°$ $\alpha_6 = 90°$
Forward kinematics result	END-EFFECTOR POSITION: X: -55.5000 mm Y: 290.0000 mm Z: 637.0000 mm
Inverse kinematics result	SOLUTION: Theta 1: 0.00 deg Alpha 2: 0.00 deg Alpha 3: 90.00 deg Theta 5: -90.00 deg Alpha 6: 90.00 deg

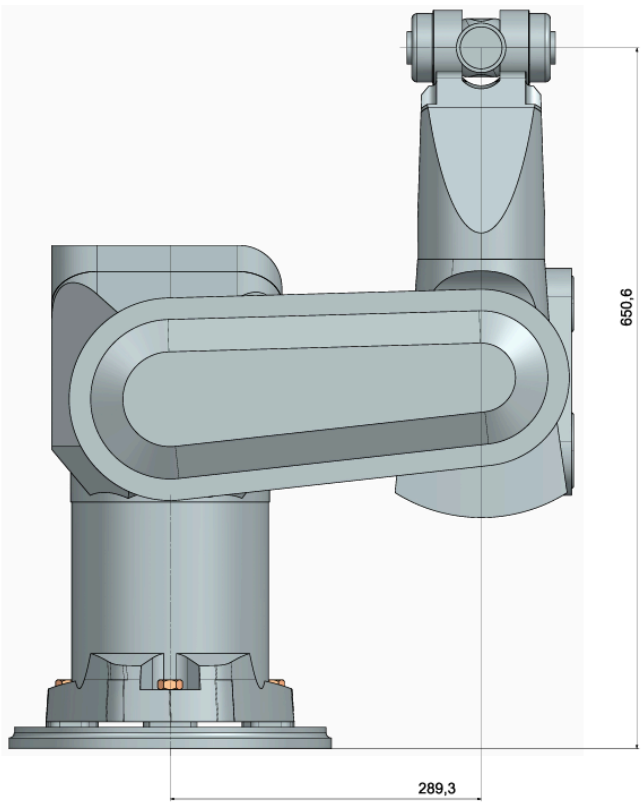

Position 4

Assumed variables	$\theta_1 = 0°$ $\alpha_2 = 45°$ $\alpha_3 =- 45°$ $\theta_5 = 0°$ $\alpha_6 = 90°$
Forward kinematics result	END-EFFECTOR POSITION: X: 0.0000 mm Y: 511.0610 mm Z: 591.5610 mm
Inverse kinematics result	SOLUTION: Theta 1: 0.00 deg Alpha 2: 45.00 deg Alpha 3: -45.00 deg Theta 5: 0.00 deg Alpha 6: 90.00 deg

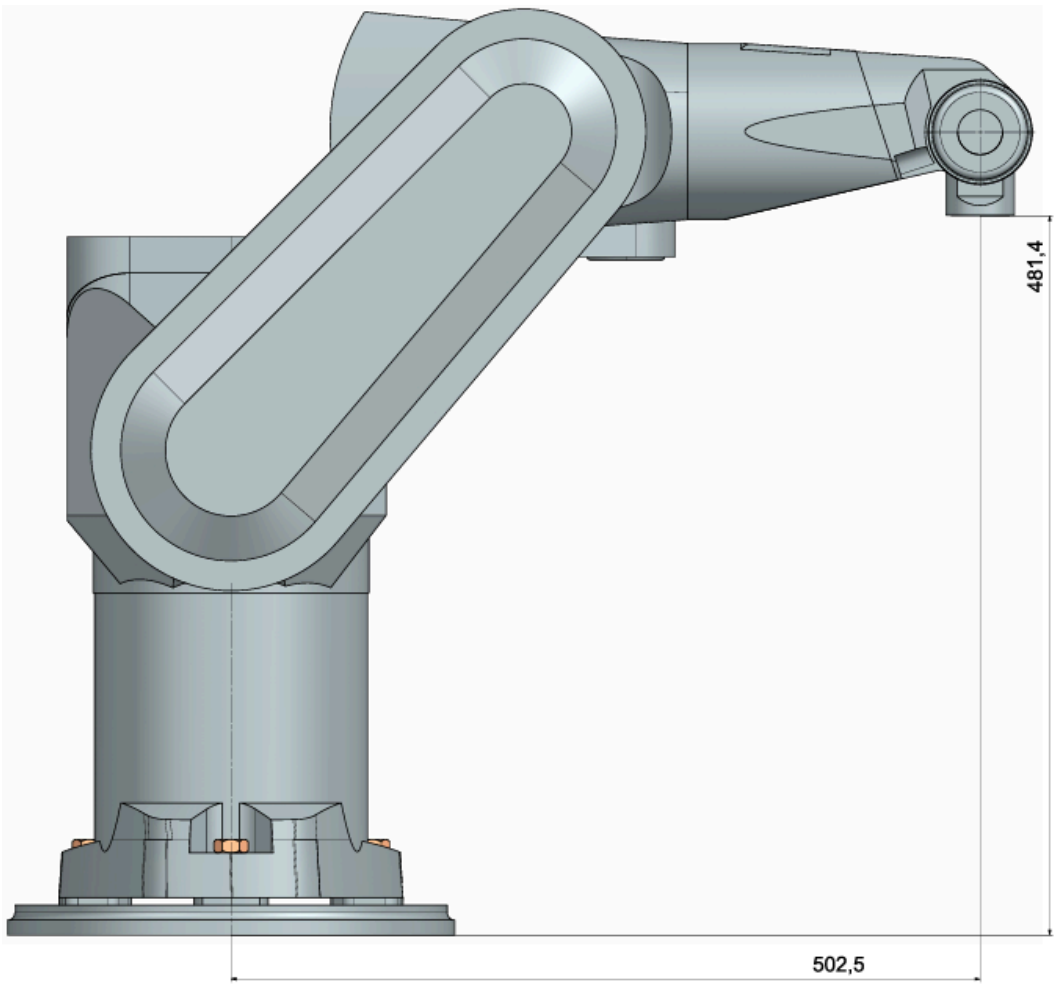

Position 5

Assumed variables	$\theta_1 = 0°$ $\alpha_2 = 45°$ $\alpha_3 = -90°$ $\theta_5 = 90°$ $\alpha_6 = 0°$
Forward kinematics result	END-EFFECTOR POSITION: X: 0.0000 mm Y: 460.6801 mm Z: 280.4419 mm
Inverse kinematics result	SOLUTION: Theta 1: 0.00 deg Alpha 2: 45.00 deg Alpha 3: -90.00 deg Theta 5: 90.00 deg Alpha 6: 0.00 deg

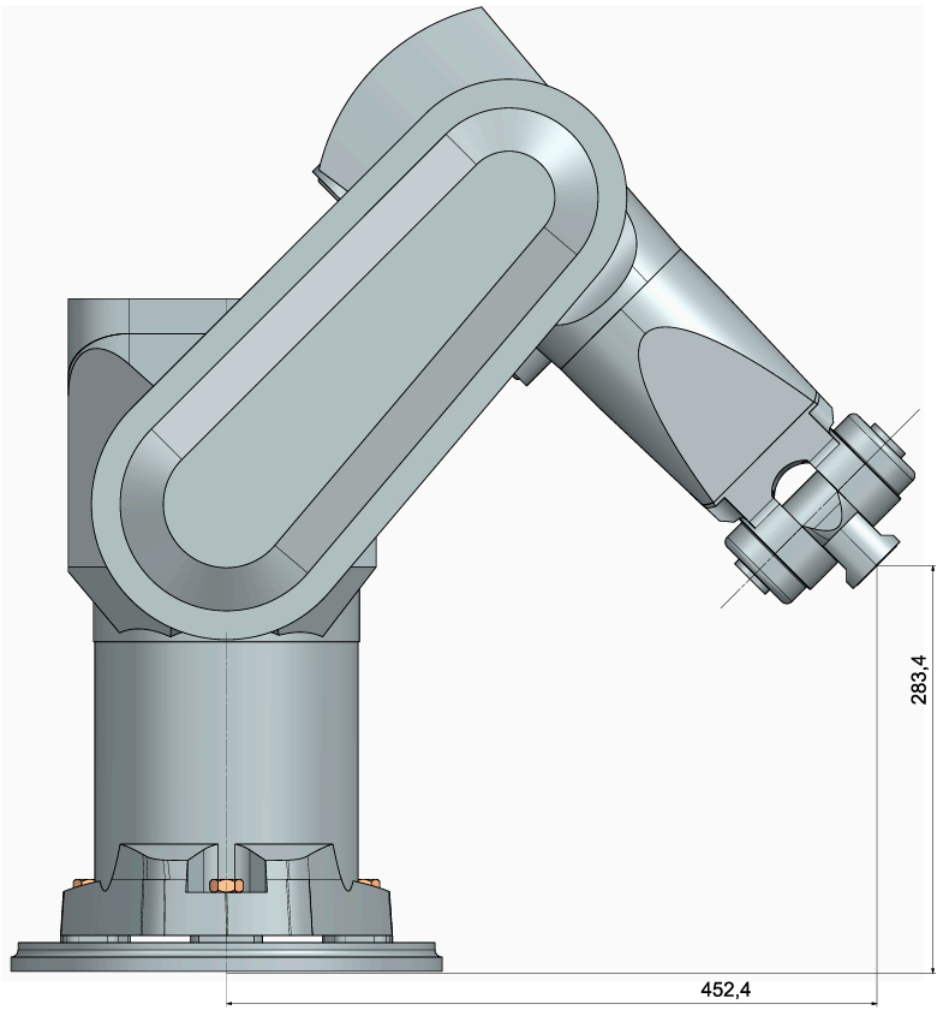

V. Model and drawings

The 3D model and drawings were all done using Siemens NX. The explosion drawing as well as the two part drawings can also be found as attachments in the folder.

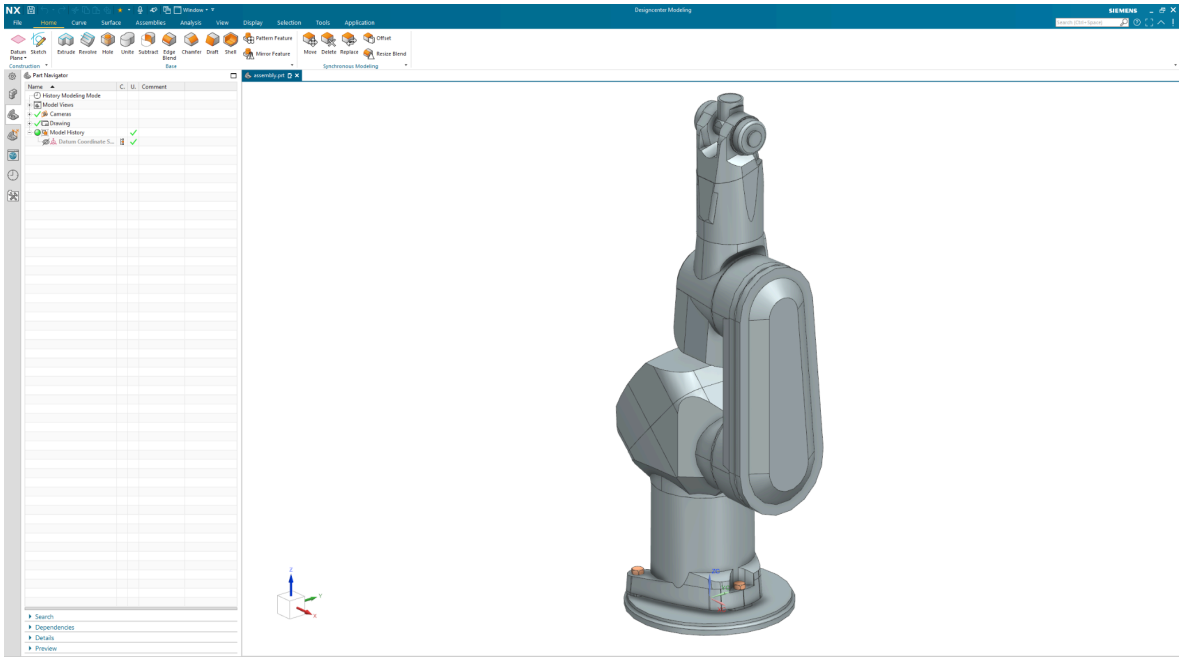

The trimetric view of the model in the upright position

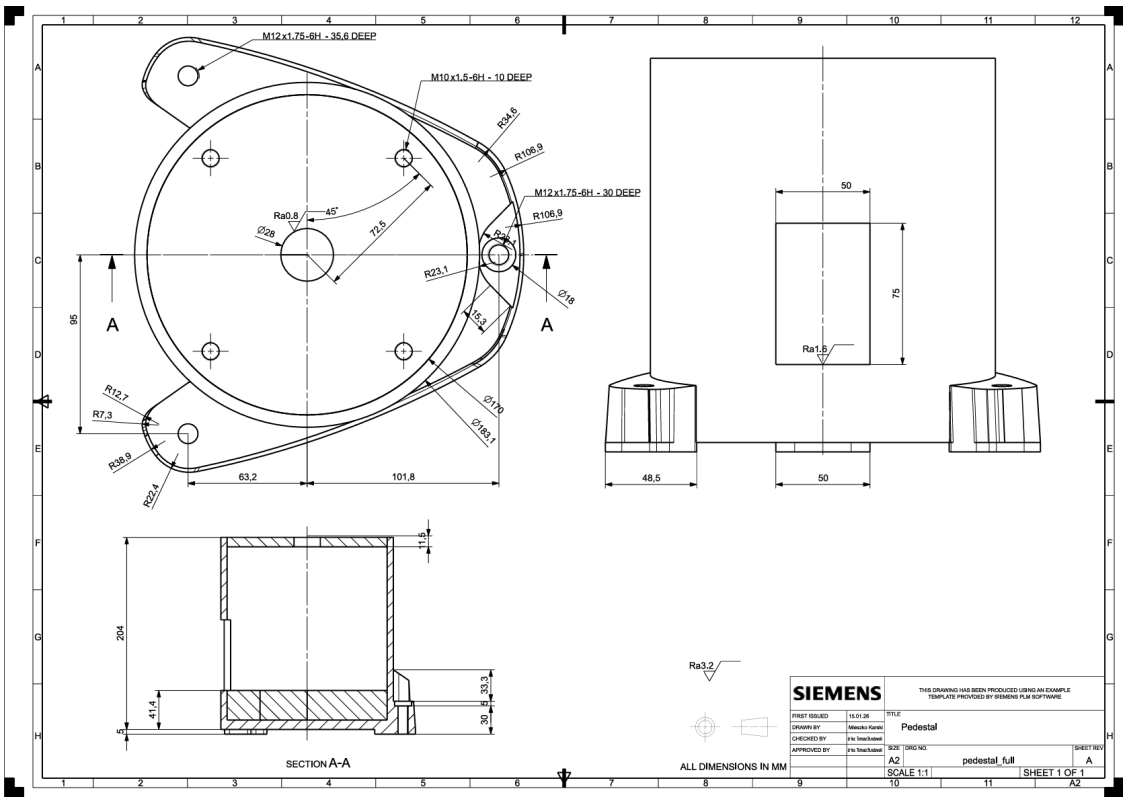

Engineering drawing of the Pedestal part

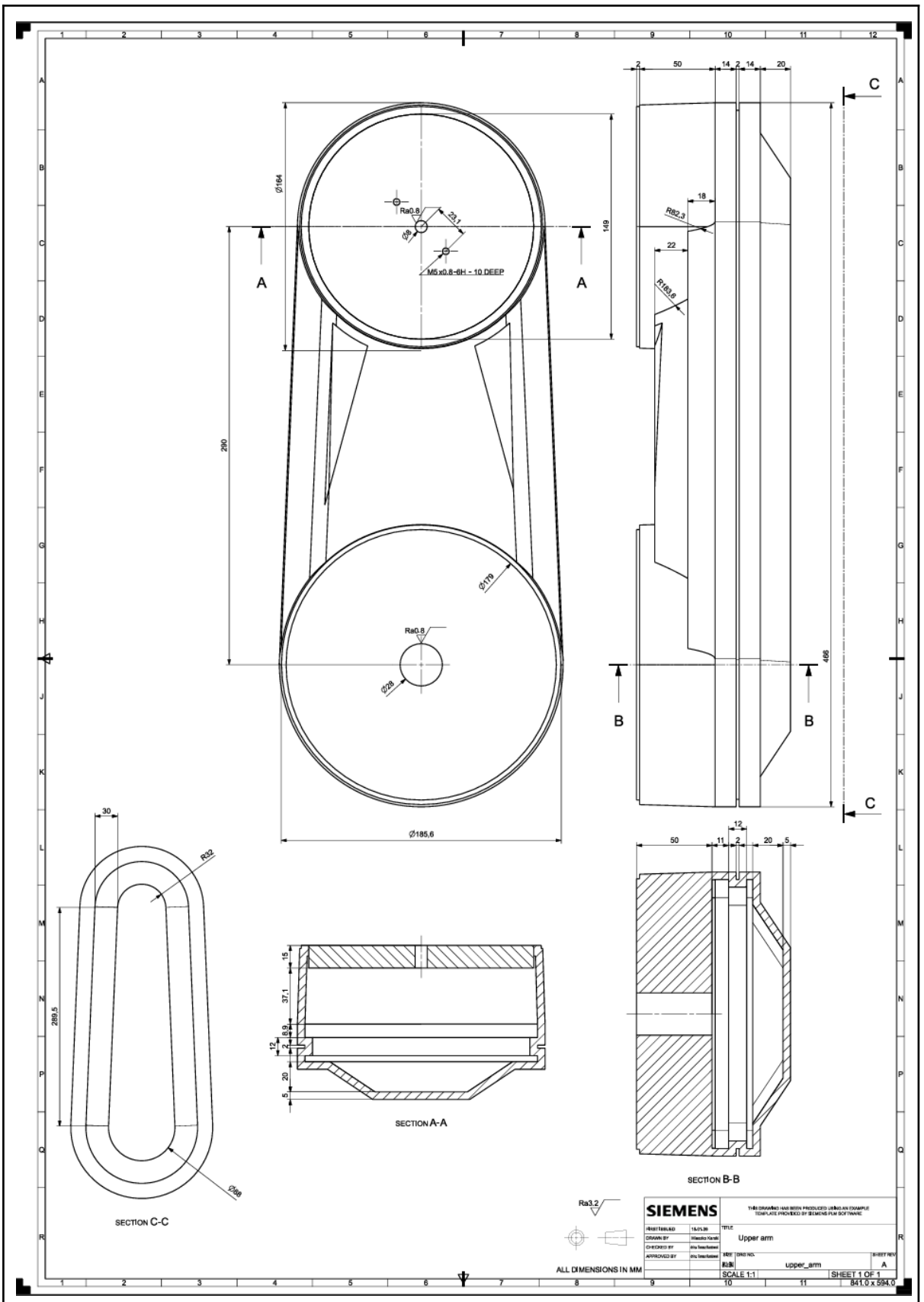

Engineering drawing of the forearm (link 2)

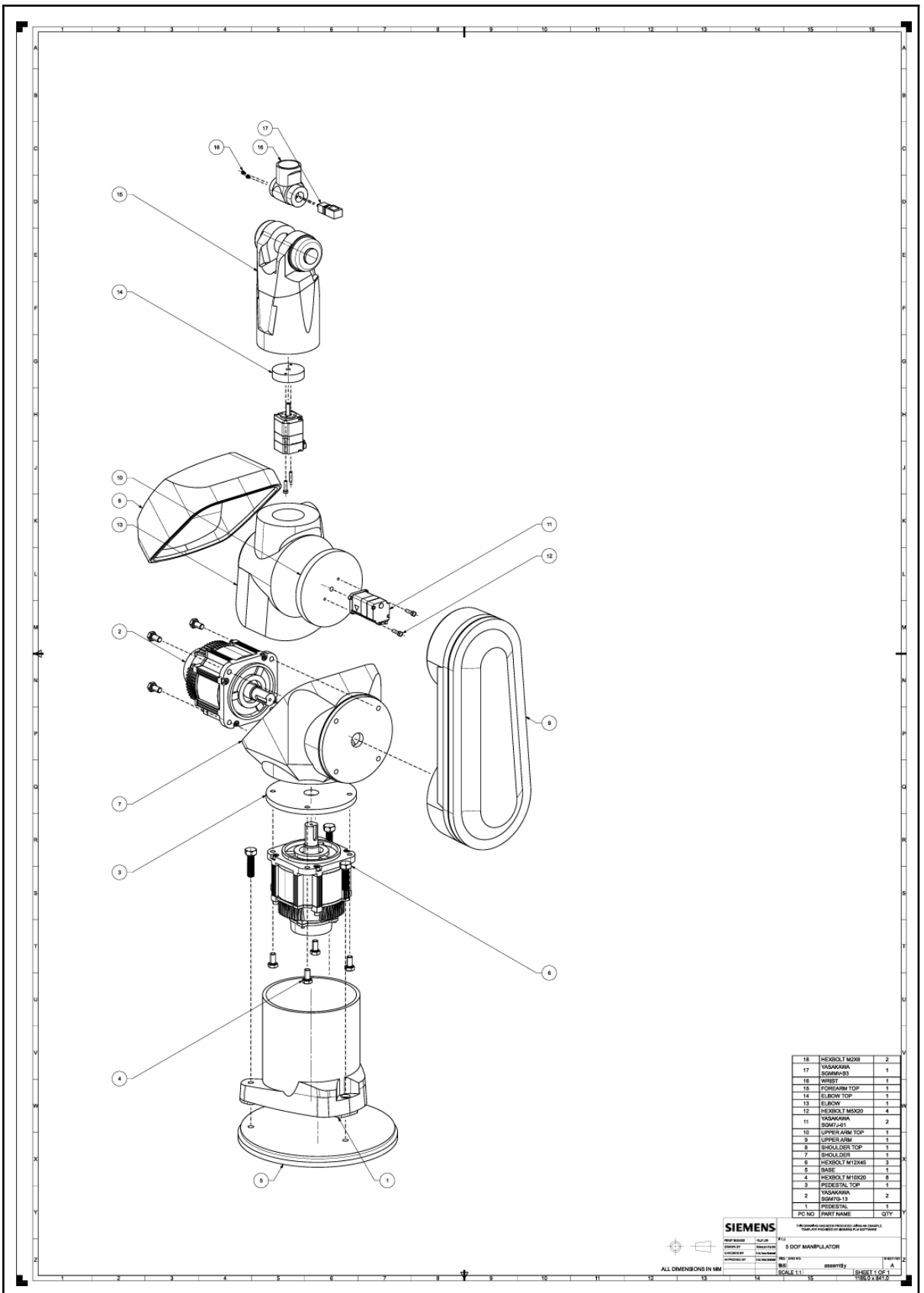

Explosion view of the model