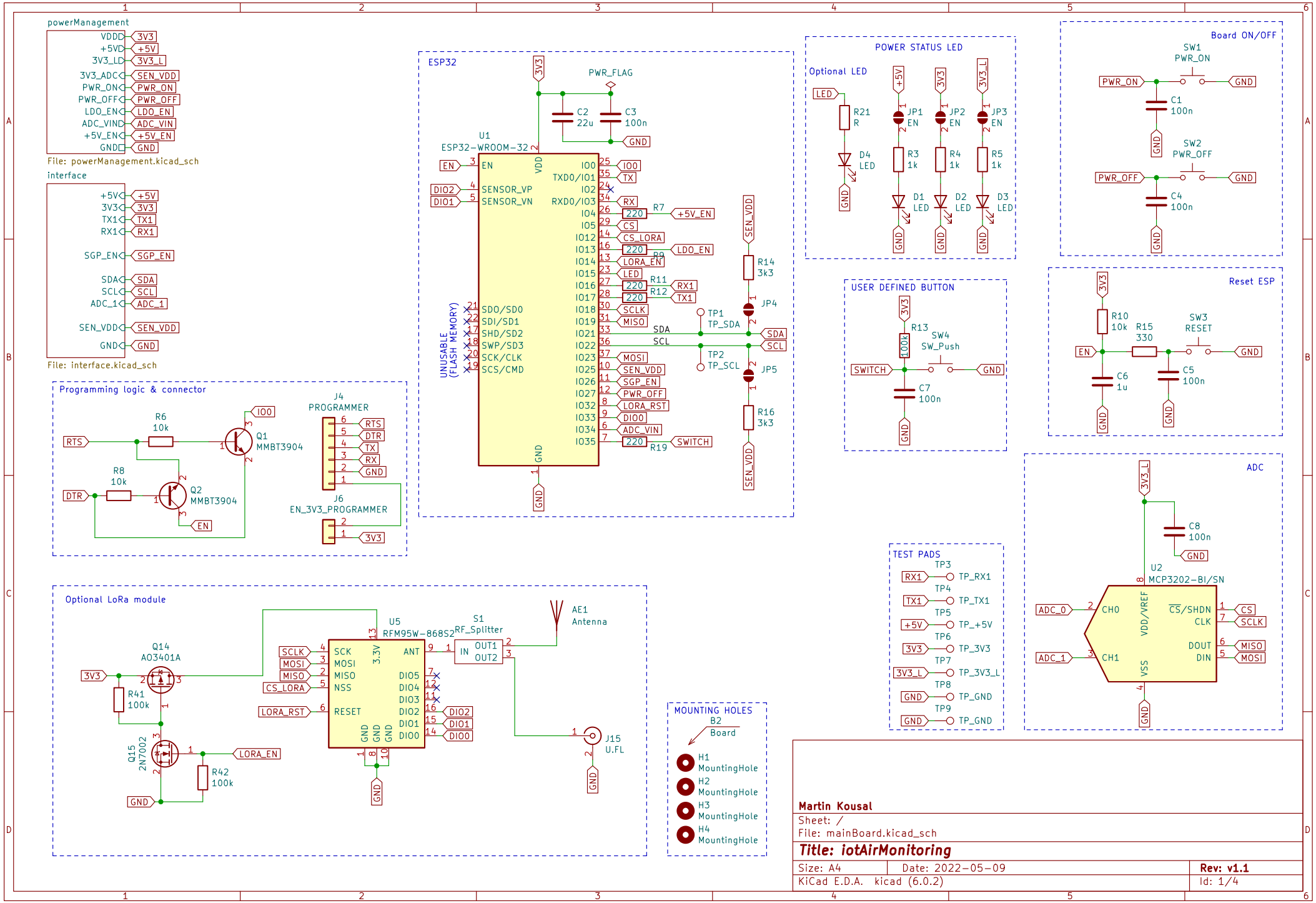
powerManagement
VDD 3V3
+5V +5V
3V3_L 3V3_L
3V3_ADC SEN_VDD
PWR_ON PWR_ON
PWR_OFF PWR_OFF
LDO_EN LDO_EN
ADC_VIN ADC_VIN
+5V_EN +5V_EN
GND GND
File: powerManagement.kicad_sch
interface
+5V +5V
3V3 3V3
TX1 TX1
RX1 RX1
SGP_EN SGP_EN
SDA SDA
SCL SCL
ADC_1 ADC_1
SEN_VDD SEN_VDD
GND GND
File: interface.kicad_sch
ESP32
U1
ESP32-WROOM-32
EN
SENSOR_VP
SENSOR_VN
DIO2
DIO1
SDO/SD0
SDI/SD1
SHD/SD2
SWP/SD3
SCK/CLK
SCS/CMD
UNUSABLE (FLASH MEMORY)
VDD
GND
PWR_FLAG
C2 22u
C3 100n
IO0
TXD0/IO1
IO2
RXD0/IO3
IO4
IO5
IO12
IO13
IO14
IO15
IO16
IO17
IO18
IO19
IO21
IO22
IO23
IO25
IO26
IO27
IO32
IO33
IO34
IO35
TX
RX
CS
CS_LORA
LORA_EN
LED
SCLK
MISO
MOSI
SEN_VDD
SGP_EN
PWR_OFF
LORA_RST
DIO0
ADC_VIN
SWITCH
R7 220 +5V_EN
R9 220 LDO_EN
R11 220 RX1
R12 220 TX1
R19 220
SDA
SCL
TP1 TP_SDA
TP2 TP_SCL
R14 3k3
R16 3k3
JP4
JP5
POWER STATUS LED
Optional LED
LED
R21 R
D4 LED
JP1 EN
JP2 EN
JP3 EN
R3 1k
R4 1k
R5 1k
D1 LED
D2 LED
D3 LED
Board ON/OFF
SW1 PWR_ON
SW2 PWR_OFF
C1 100n
C4 100n
USER DEFINED BUTTON
R13 100k
SW4 SW_Push
SWITCH
C7 100n
Reset ESP
R10 10k
R15 330
SW3 RESET
C6 1u
C5 100n
Programming logic & connector
R6 10k
R8 10k
Q1 MMBT3904
Q2 MMBT3904
RTS
DTR
J4 PROGRAMMER
J6 EN_3V3_PROGRAMMER
ADC
C8 100n
U2 MCP3202-BI/SN
CH0
CH1
VDD/VREF
VSS
CS/SHDN
CLK
DOUT
DIN
ADC_0
ADC_1
TEST PADS
TP_RX1
TP_TX1
TP_+5V
TP_3V3
TP_3V3_L
TP_GND
Optional LoRa module
Q14 AO3401A
R41 100k
Q15 2N7002
R42 100k
U5 RFM95W-868S2
SCK
MOSI
MISO
NSS
RESET
ANT
DIO5
DIO4
DIO3
DIO2
DIO1
DIO0
S1 RF_Splitter
IN
OUT1
OUT2
AE1 Antenna
J15 U.FL
MOUNTING HOLES
B2 Board
H1 MountingHole
H2 MountingHole
H3 MountingHole
H4 MountingHole
Martin Kousal
Sheet: /
File: mainBoard.kicad_sch
Title: iotAirMonitoring
Size: A4
Date: 2022-05-09
Rev: v1.1
KiCad E.D.A. kicad (6.0.2)
Id: 1/4

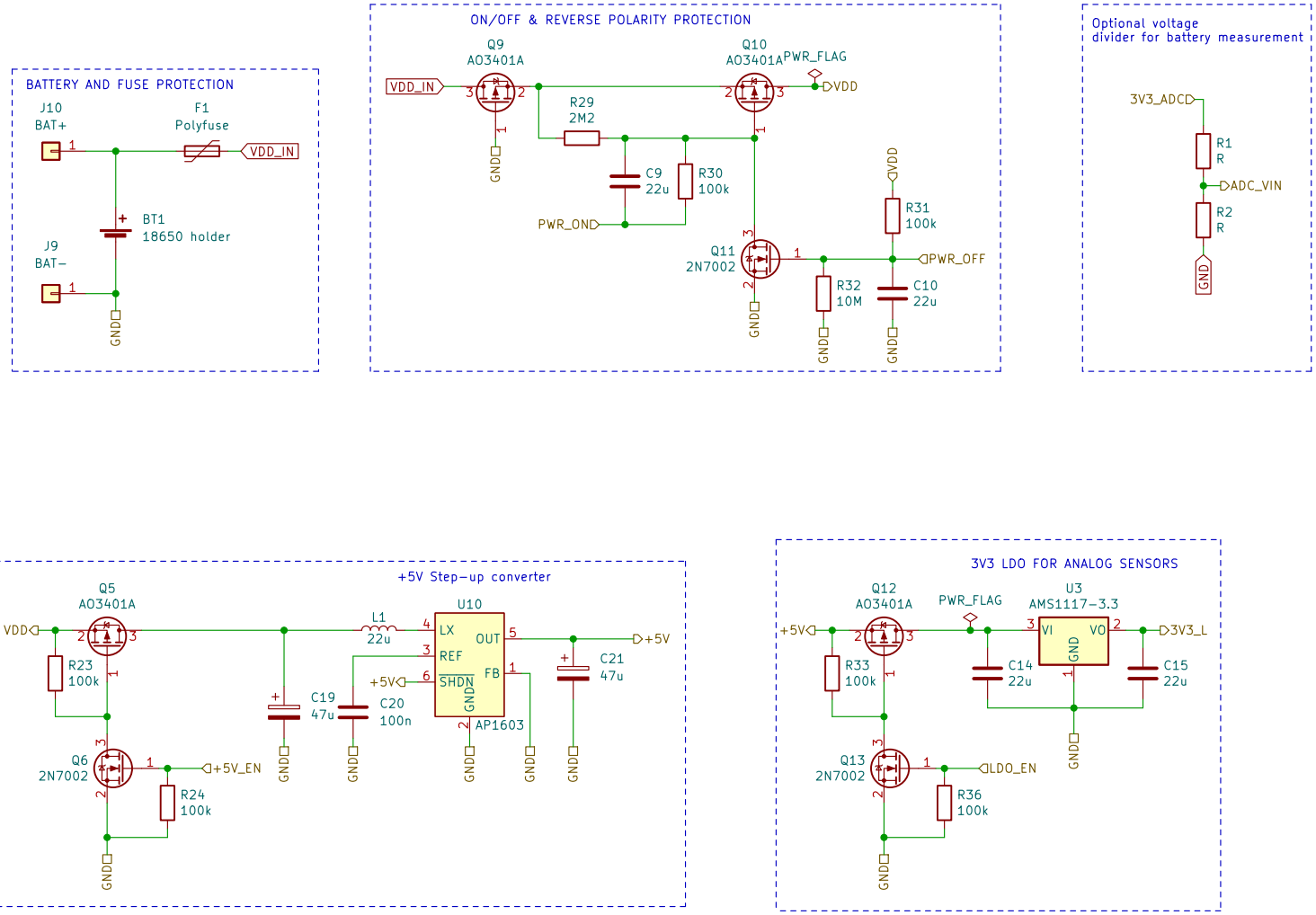

Martin Kousal

Sheet: /powerManagement/
File: powerManagement.kicad_sch

Title: iotAirMonitoring

Size: A4	Date: 2022−05−09	**Rev: v1.1**
KiCad E.D.A. kicad (6.0.2)		Id: 2/4

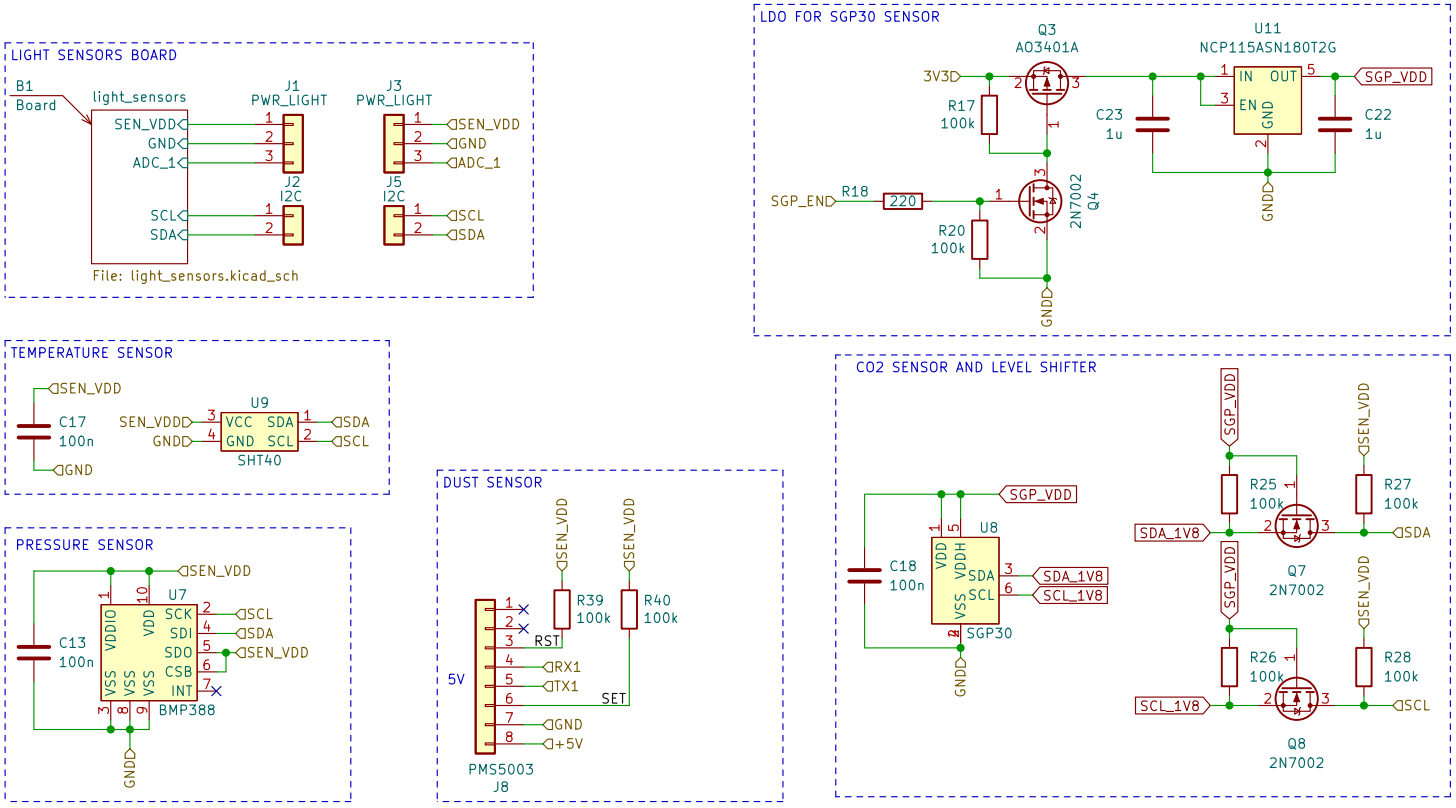

Martin Kousal

Sheet: /interface/

File: interface.kicad_sch

Title: iotAirMonitoring

Size: A4	Date: 2022-05-09	**Rev: v1.1**
KiCad E.D.A. kicad (6.0.2)		Id: 3/4

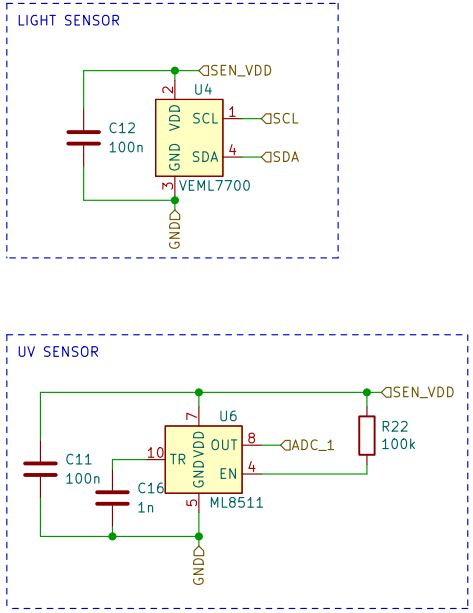

Martin Kousal

Sheet: /interface/light_sensors/
File: light_sensors.kicad_sch

Title: iotAirMonitoring

Size: A4	Date: 2022-05-09	**Rev: v1.1**
KiCad E.D.A. kicad (6.0.2)		Id: 4/4