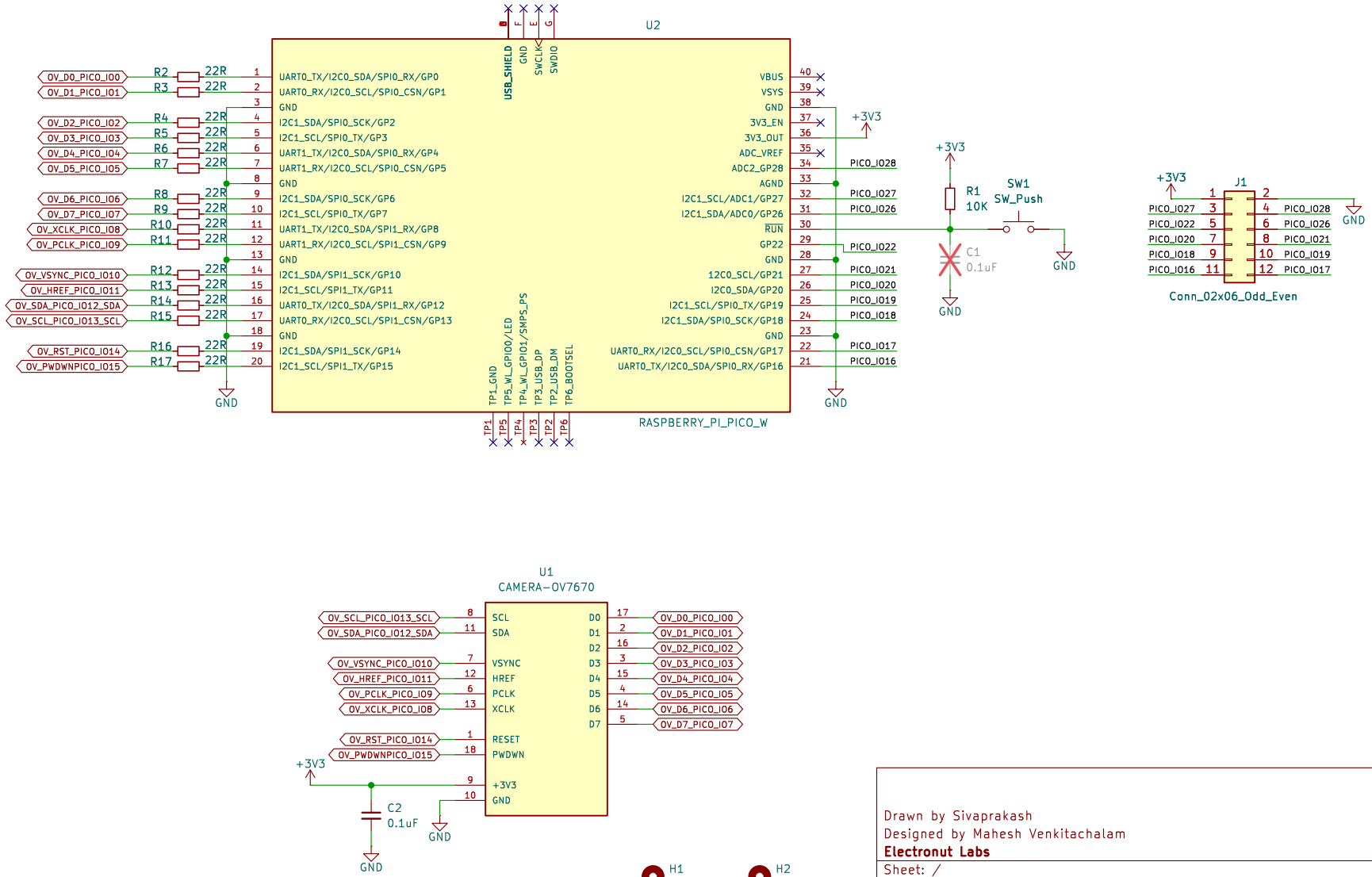

Drawn by Sivaprakash
Designed by Mahesh Venkitachalam
Electronut Labs

Sheet: /
File: pico_ov7670_adapter.kicad_sch

Title: PICO OV7670 Adapter

Size: A4	Date: 2025-01-05	**Rev: Ver 1.0**
KiCad E.D.A. 8.0.7		Id: 1/1