Probabilistic Graphical Models

Approximate Inference

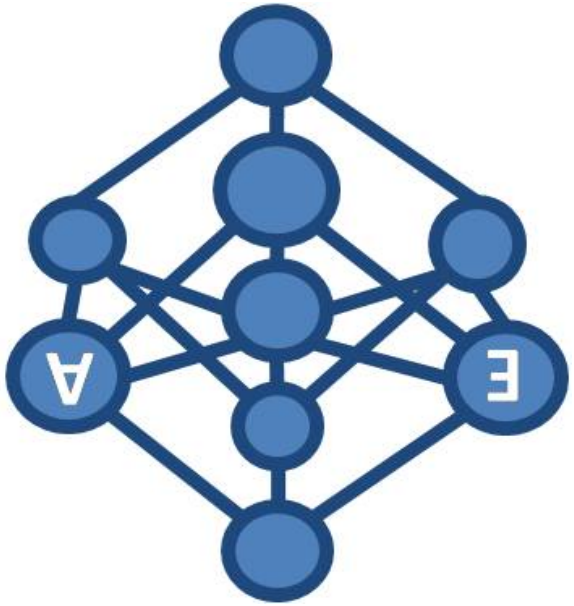

*Thanks to Carlos Guestrin, Pedro Domingos and many others for making their slides publically available

Today

- From class, we know that computing the aposteriori belief of a variable in a general BN is NP-hard
- In particular, exact inference for DBNs is intractable even for simple cases
- Solution: approximate inference
  - Loopy Belief Propagation
  - Sampling

Pearl's belief propagation

- We have the evidence *E and want to compute all the single node marginals* $P(V_i|E)$ *for all I using*
- Local computation for one node *V* desired

- Information flows through the links of *G*
  - *flows as messages of two types – λ and π*
- *V* splits network into two *disjoint* parts
  - **Strong independence assumptions induced – crucial!**
- Denote E_V^+ the part of evidence accessible through the parents of *V* (*causal*)
  - passed downward in *π messages*
- Analogously, let E_V^- be the *diagnostic* evidence
  - passed upwards in *λ messages*

Pearl's Belief Propagation (assuming polytree)

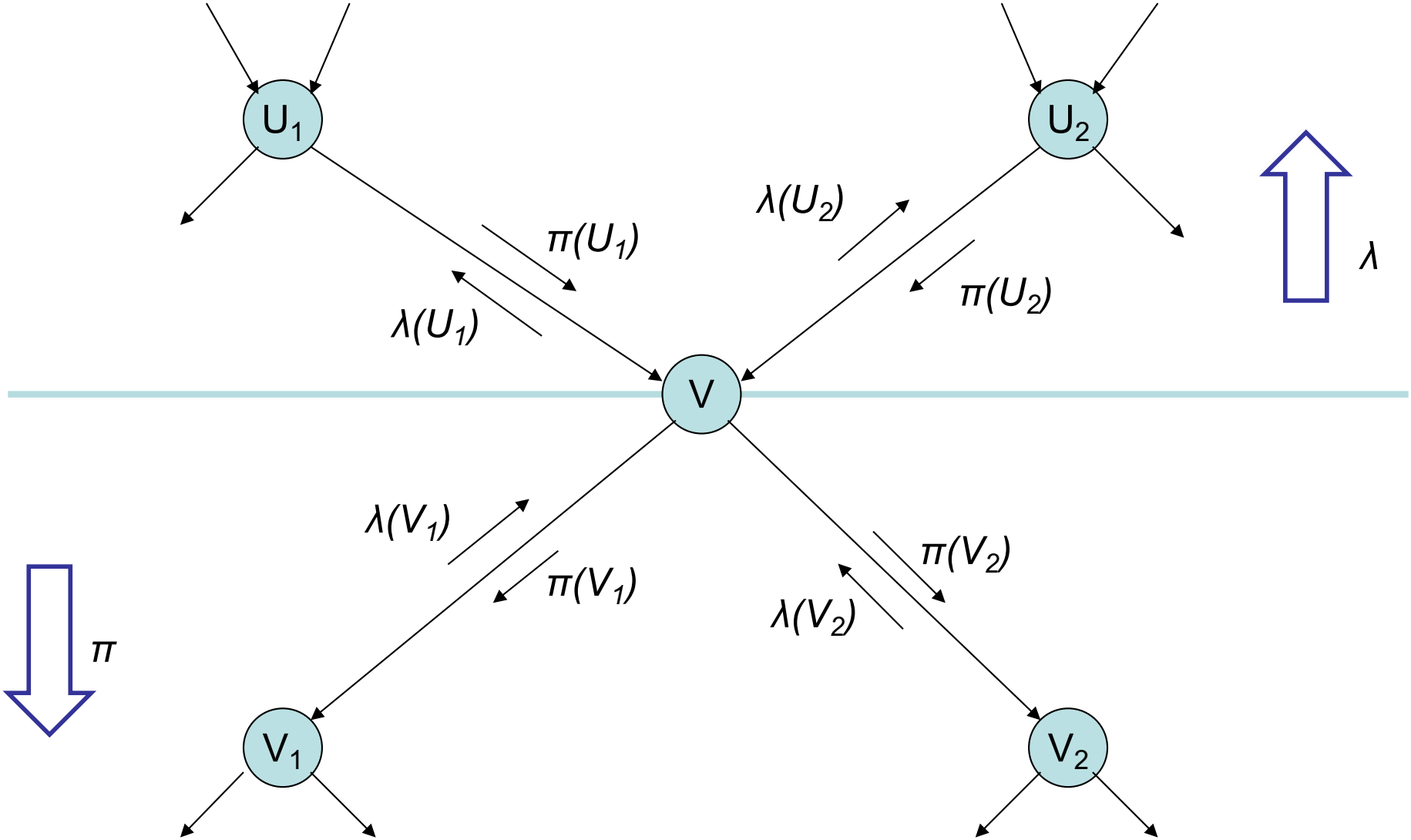

The π (downward) Messages

- What are the π (downward) messages?
- For simplicity, let the nodes be binary. Marginal $P(V_1)$ is easy to compute locally at V_1. What about V_2

V_1=T	0.8
V_1=F	0.2

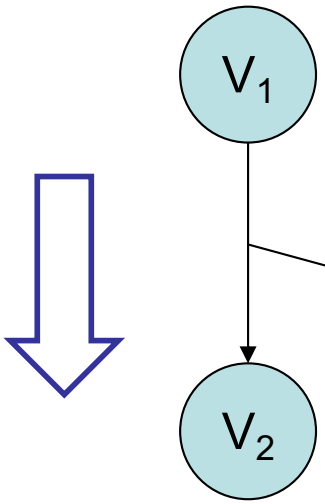

P	V_1=T	V_1=F
V_2=T	0.4	0.9
V_2=F	0.6	0.1

The message passes on information. What information? We can rewrite:

$$P(V_2) = P(V_2| V_1=T)P(V_1=T) + P(V_2| V_1=F)P(V_1=F)$$

Thus, the information that V_2 requires is the CPT of $V_1 = \pi_V(V_1)$

π Messages capture information passed from parents to childred

Evidence easy to incorporate

- Evidence – values of observed nodes
  - $V_3 = T$, $V_6 = 3$
- Our belief in what the value of V_i 'should' be changed.
- This belief is propagated
- As if the CPTs became

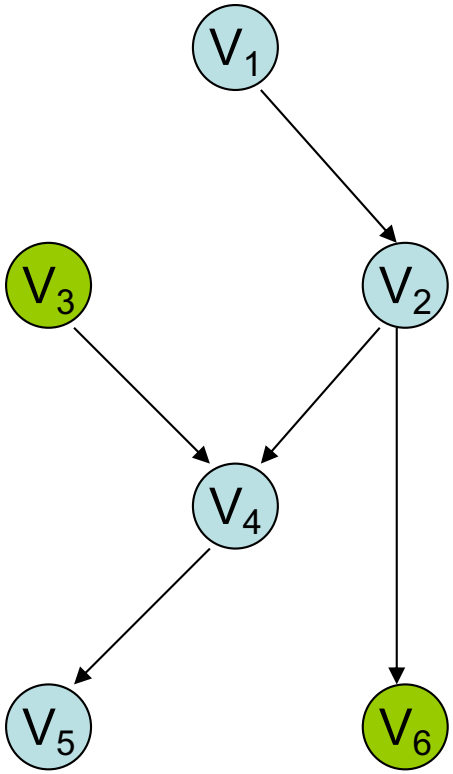

V_3=T	1.0
V_3=F	0.0

P	V_2=T	V_2=F
V_6=1	0.0	0.0
V_6=2	0.0	0.0
V_6=3	1.0	1.0

In that sense

" $P(V_2 | V_1) = P(V_2 | V_1=T)P(V_1=T)$
$+ P(V_2 | V_1=F)P(V_1=F)$ "

Now, the λ (upward) Messages

- We know what the π (downward) messages are
- What about λ, i.e., the messages going upwards?

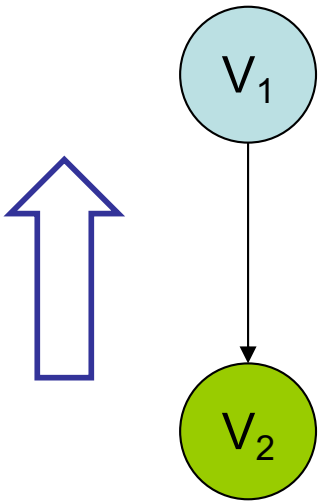

Assume E = { V_2 } (otherwise "boring") and compute by Bayes rule:

$$P(V_1 \mid V_2) = \frac{P(V_1)P(V_2 \mid V_1)}{P(V_2)} = \alpha P(V_1)P(V_2 \mid V_1)$$

The information not available at V_1 is $P(V_2|V_1)$, *to be* passed upwards by a λ-message. Again, this is not exactly the CPT, but the belief based on evidence down the tree, and we have just seen how to compute this.

- To sum up, the messages are $\pi(V)=P(V|E^+)$ and $\lambda(V)=P(E^-|V)$

Combination of evidence

- So, we can send messages locally. More precisely, recall that $E_V = E_V^+ \cup E_V^-$ and let us compute

$$P(V \mid E) = P(V \mid E_V^+, E_V^-) = \alpha' P(E_V^+, E_V^- \mid V) P(V) =$$

$$\alpha' P(E_V^- \mid V) P(E_V^+ \mid V) P(V) = \alpha P(E_V^- \mid V) P(V \mid E_V^+) =$$

$$\alpha \lambda(V) \pi(V) = BEL(V)$$

- α is the normalization constant
  - normalization is not necessary (can do it at the end), but may prevent numerical underflow problems
- **In other words, we can maintain an approx. belief locally. In general, it is approx. due to the strong independence assumption we made.**

Upward Belief

- Assume X received λ-messages from neighbors
- How to compute $\lambda(x) = p(e^-|x)$?
- Let $Y_1, \ldots, Y_c$ be the children of X
- $\lambda_{XY}(x)$ denotes the λ-message sent from Y to X

$$\lambda(x) = \prod_{j=1}^{c} \lambda_{Y_j X_i}(x)$$

Derivation clear: Assume two children Y, Z of X,
then $P(e^-|x) = P(e^-_Y, e^-_Z|x) = P(e^-_Y|x) * P(e^-_Z|x)$
(siblings independent given parent)

Downward Belief

- Assume X received π -messages from neighbors
- How to compute $\pi(x) = p(x|e^+)$?
- Let $U_1, \ldots, U_p$ be the parents of X
- $\pi_{XY}(x)$ denotes the π-message sent from Y to X
- Summation over the CPT

$$\pi(x) = \sum_{u_1,\ldots,u_p} P(x \mid u_1,\ldots,u_p) \prod_{j=1}^{p} \pi_{U_j X_i}(u_j)$$

Derivation: We have to sum over each state of X, now given its parents. That is, we condition on all U_i and note that each pair (parent U_i,evidence e^+_i) is independent of the other pairs (U_j,e^+_j)

The messages to pass

- We need to compute $\pi_{XY}(x)$

$$\pi_{XY_J}(x) = \alpha \pi_X(x) \prod_{k \neq j} \lambda_{Y_k X}(x)$$

Derivation

π_{XYJ}

$= P(x \mid e^{+}_{XYj})$

$= P(x \mid e - e^{-}_{XYj}) =$

= [Bel(x) when evidence e^{-}_{Xyj} is surpressed]

= Bel(x) setting $\lambda_{XYj}(x) = 1$

= formula above

Messages to pass

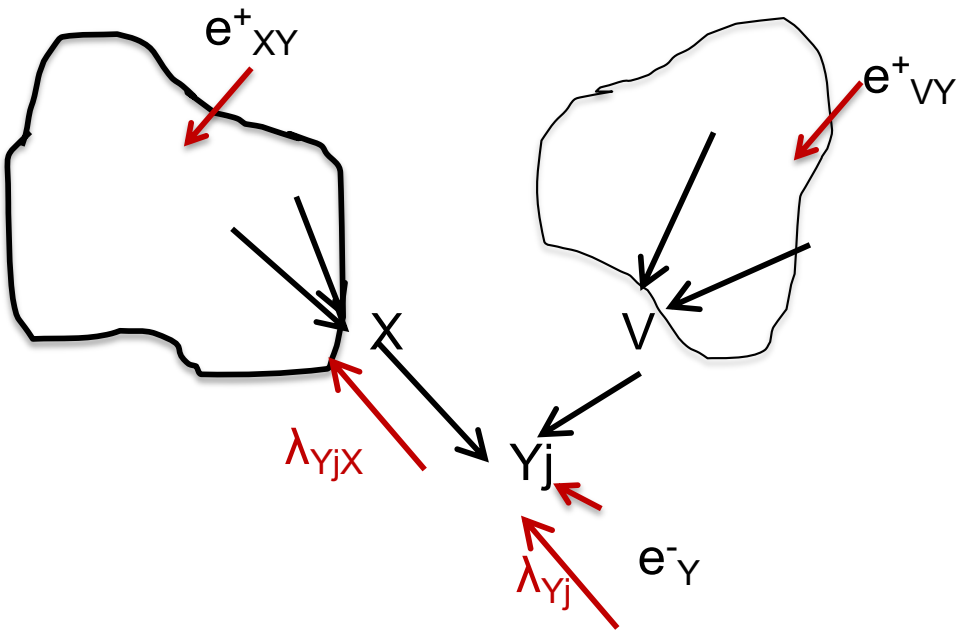

Derivation hint

- $\lambda_{YjX} = P(e^-_{XYj} | x)$
  $= P(e^+_{VYj}, e^-_{Yj} | X)$
- then condition on YJ and V,
- And use independences
  - Y_j seperates e^+_{VYj} from e^-_{Yj}
  - V seperates e^+_{VYj} from X

- Symbolically, group other (≠X) parents of Yj into single complex $V = V_1, \ldots, V_q$ and distinguish link X->Yj vs. V-> Yj

$$\lambda_{Y_j X}(x) = \sum_{y_j} \lambda_{Y_j}(y_j) \sum_{v_1,\ldots,v_q} p(y \mid v_1,\ldots,v_q) \prod_{k=1}^{q} \pi_{V_k Y_j}(v_k)$$

Summary of the messages

- So, we need to compute $\pi_{XY}(x)$

$$\pi_{XY_J}(x) = \alpha \pi_X(x) \prod_{k \neq j} \lambda_{Y_k X}(x)$$

Evidential support from parents

Evidential support from children

- Similarly, $\lambda_{XY}(x)$
- Group all parents of Y into V = $V_1, \ldots, V_q$

Evidential support from parents

$$\lambda_{Y_j X}(v_j) = \sum_x \lambda_{Y_j}(x) \sum_{v_k : k \neq j} p(x \mid v_1, \ldots, v_n) \prod_{k \neq j} \pi_{V_k Y_j}(v_k)$$

Evidential support from children

The Pearl Belief Propagation Algorithm

- We can summarize the algorithm now:
  - Initialization step
    - For all $V_i=e_i$ in E:
      - $\lambda(x_i) = 1$ wherever $x_i = e_i$; 0 otherwise
      - $\pi(x_i) = 1$ wherever $x_i = e_i$; 0 otherwise
    - For nodes without parents
      - $\pi(x_i) = p(x_i)$ - prior probabilities
    - For nodes without children
      - $\lambda(x_i) = 1$ uniformly (normalize at end)

The Pearl Belief Propagation Algorithm

- Iterate until no change occurs
  - (For each node X) if X has received all the π messages from its parents, calculate $\pi(x)$
  - (For each node X) if X has received all the λ messages from its children, calculate $\lambda(x)$
  - (For each node X) if $\pi(x)$ has been calculated and X received all the λ-messages from all its children (except Y), calculate $\pi_{XY}(x)$ and send it to Y.
  - (For each node X) if $\lambda(x)$ has been calculated and X received all the π-messages from all parents (except U), calculate $\lambda_{XU}(x)$ and send it to U.
- Compute BEL(X) = $\lambda(x)\pi(x)$ and normalize

Complexity

- On a polytree, the BP algorithm converges in time proportional to diameter of network – at most linear
- Work done in a node is proportional to the size of CPT
- Hence BP is linear in number of network parameters

Most Graphs are not Polytrees

- Cutset conditioning
  - Instantiate a node in cycle, absorb the value in child's CPT.
  - Do it with all possible values and run belief propagation.
  - Sum over obtained conditionals
  - Hard to do
    - Need to compute P(c)
    - Exponential explosion - minimal cutset desirable (also NP-complete)
- Clustering algorithm
- Approximate inference
  - **Loopy BP**, **Sampling Approaches**

Loopy Belief Propagation

- If BP is used on graphs with loops, messages may circulate indefinitely
- **Empirically, a good approximation is still achievable**
  - Stop after fixed # of iterations
  - Stop when no significant change in beliefs
  - If solution is not oscillatory but converges, it usually is a good approximation
- Example: Turbo Codes, **Lifted Inference**

Sampling

- Input: Bayesian network with set of nodes X
- Sample = a tuple with assigned values

  $s=(X_1=x_1,X_2=x_2,\ldots ,X_k=x_k)$
- Tuple may include all variables (except evidence) or a subset
- Sampling schemas dictate how to generate samples
- Ideally, samples are distributed according to P(X|E)

Sampling Fundamentals

Given a set of variables $X = \{X_1, X_2, \ldots X_n\}$ that represent a joint probability distribution **π(X)** and some function g(X), we can compute the expected value of **g(X)** as follows:

$$E_\pi g = \int g(x)\pi(X)dx$$

Sampling From $\pi(X)$

A sample $\mathbf{S^t}$ is an instantiation:

$$S^t = \{x_1^t, x_2^t, \ldots, x_n^t\}$$

Given independent, identically distributed samples (iid) S^1, S^2, …S^T from $\pi(X)$, it follows from **Strong Law of Large Numbers**:

$$\bar{g} = \frac{1}{T} \sum_{t=1}^{T} g(S^t)$$

Sampling Basics

- Given random variable X over D(X)={0, 1}
- Given P(X) = {0.3, 0.7}
- Generate k samples: 0,1,1,1,0,1,1,0,1
- Approximate P'(X):

$$P'(X=0) = \frac{\#samples(X=0)}{\#samples} = \frac{4}{10} = 0.4$$

$$P'(X=1) = \frac{\#samples(X=1)}{\#samples} = \frac{6}{10} = 0.6$$

$$P'(X) == \{0.4, 0.6\}$$

How to draw a sample ?

- Given random variable X, D(X)={0, 1}
- Given P(X) = {0.3, 0.7}
- Sample X $\leftarrow$ P (X)
  - draw random number r $\in$ [0, 1]
  - If (r < 0.3) then set X=0
  - Else set X=1
- Can generalize for any domain size

Sampling in BN

- Same Idea: generate a set of samples T
- Estimate $P(X_i|E)$ from samples
- Challenge: X is a vector and P(X) is a huge distribution represented by BN
- Need to know:
  - How to generate a new sample ?
  - How many samples T do we need ?
  - How to estimate $P(E=e)$ and $P(X_i|e)$?

Sampling Algorithms

- Forward Sampling
- Gibbs Sampling (MCMC)
  - Blocking
  - Rao-Blackwellised
- Likelihood Weighting
- Importance Sampling
- Sequential Monte-Carlo (Particle Filtering) in Dynamic Bayesian Networks

Forward Sampling - No Evidence (Henrion 1988)

Input: Bayesian network

$X = \{X_1, \ldots, X_N\}$, N- #nodes, T - # samples

Output: T samples

Process nodes in topological order – first process the ancestors of a node, then the node itself:

1. For t = 0 to T
2. For i = 0 to N
3. $X_i \leftarrow$ sample x_i^t from $P(x_i \mid pa_i)$

Sampling a Value

What does it mean to sample x_i^t from $P(X_i \mid pa_i)$?

- Assume $D(X_i)=\{0,1\}$
- Assume $P(X_i \mid pa_i) = (0.3, 0.7)$

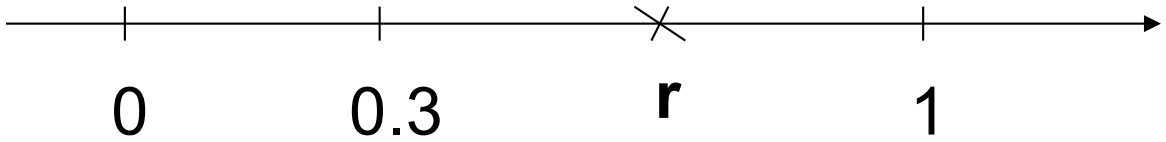

- Draw a random number **r** from [0,1]

  If **r** falls in [0,0.3], set $X_i = 0$

  If **r** falls in [0.3,1], set $X_i=1$

Forward sampling (example)

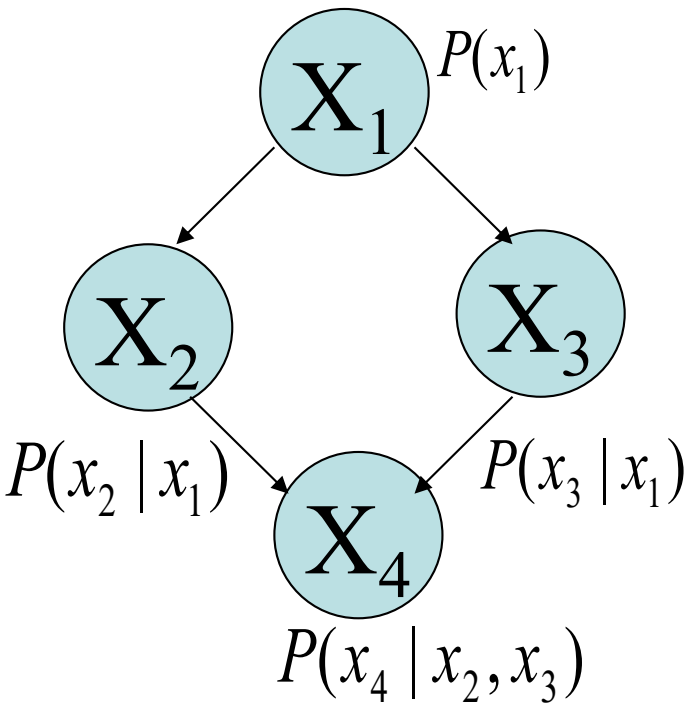

No Evidence

// generate sample k

1. Sample x_1 from $P(x_1)$
2. Sample x_2 from $P(x_2 \mid x_1)$
3. Sample x_3 from $P(x_3 \mid x_1)$
4. Sample x_4 from $P(x_4 \mid x_2, x_3)$

Forward Sampling-Answering Queries

Task:

Given **T** samples $\{S^1, S^2, \ldots, S^n\}$, estimate $P(X_i = x_i)$:

$$\overline{P}(X_i = x_i) = \frac{\#samples(X_i = x_i)}{T}$$

Basically, count the proportion of samples where $X_i = x_i$

Forward Sampling w/ Evidence

Input: Bayesian network

$X = \{X_1, \ldots, X_N\}$, N- #nodes

E – evidence, T - # samples

Output: T samples consistent with E

1. For t=1 to T
2. For i=1 to N
3. $X_i \leftarrow$ sample x_i^t from $P(x_i \mid pa_i)$
4. **If X_i in E and $X_i \neq x_i$, reject sample:**
5. **i = 1 and go to step 2**

Forward sampling (example)

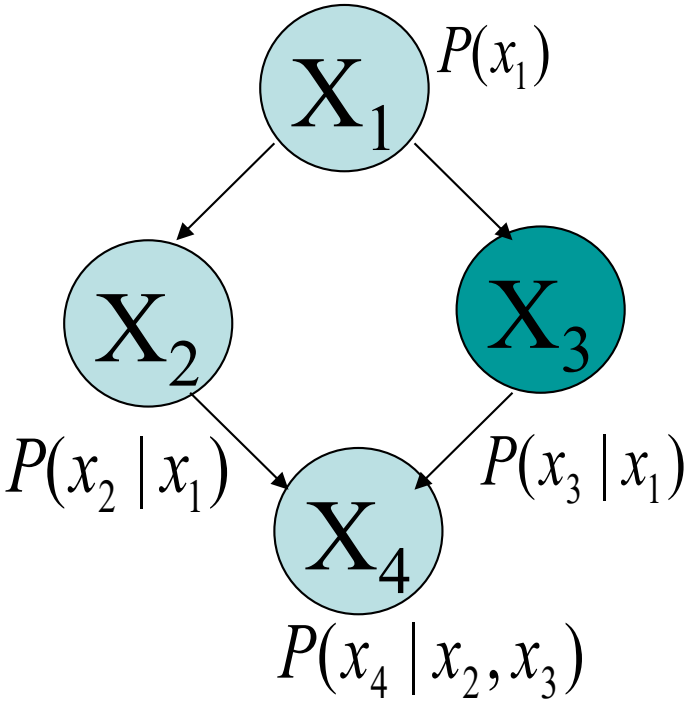

Evidence: $X_3 = 0$

// generate sample k

1. Sample x_1 from $P(x_1)$
2. Sample x_2 from $P(x_2 \mid x_1)$
3. Sample x_3 from $P(x_3 \mid x_1)$
4. If $x_3 \neq 0$, reject sample and start from 1, otherwise
5. Sample x_4 from $P(x_4 \mid x_2, x_3)$

Forward Sampling: Illustration

Let Y be a subset of evidence nodes s.t. Y=u

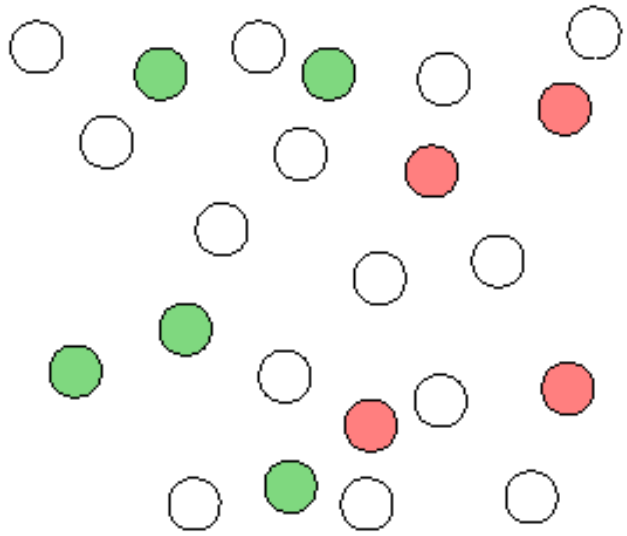

Sample with

not $\boldsymbol{Y} = \boldsymbol{u}$

$\boldsymbol{Y} = \boldsymbol{u}, X \neq w$

$\boldsymbol{Y} = \boldsymbol{u}, X = w$

Approximation for $P^{\boldsymbol{X}}(X = w \mid \boldsymbol{Y} = \boldsymbol{u})$: $\frac{\#\,\bullet}{\#\,\bullet \cup \bullet}$

Forward Sampling:Performance

Advantages:

- $P(x_i \mid pa(x_i))$ is readily available
- Samples are independent !

Drawbacks:

- If evidence **E** is rare (P(e) is low), then we will reject most of the samples!
- Since **P(y)** in estimate of **T** is unknown, must estimate **P(y)** from samples themselves!
- If **P(e)** is small, **T** will become very big!

Problem: Evidence

- Forward Sampling
  - High Rejection Rate
- Fix evidence values
  - Gibbs sampling (MCMC)
  - Likelihood Weighting
  - Importance Sampling

Gibbs Sampling

- Markov Chain Monte Carlo method

(Gelfand and Smith, 1990, Smith and Roberts, 1993, Tierney, 1994)

- Samples are **dependent**, form Markov Chain
- Sample from P'(X|e) which **converges** to P(X|e)
- Guaranteed to converge when all P > 0
- Methods to improve convergence:
  - Blocking
  - Rao-Blackwellised

Gibbs Sampling (Pearl, 1988)

- A sample **t**∈[1,2,…], is an instantiation of all variables in the network:

$$x^t = \{X_1 = x_1^t, X_2 = x_2^t, \ldots, X_N = x_N^t\}$$

- Sampling process
  - Fix values of observed variables e
  - Instantiate node values in sample x^0 at random
  - Generate samples $x^1, x^2, \ldots x^T$ from P(x|e)
  - As before, compute posteriors from samples

Ordered Gibbs Sampler

Generate sample x^{t+1} from x^t :

Process All Variables In Some Order

$$X_1 = x_1^{t+1} \leftarrow P(x_1 \mid x_2^t, x_3^t, \ldots, x_N^t, e)$$

$$X_2 = x_2^{t+1} \leftarrow P(x_2 \mid x_1^{t+1}, x_3^t, \ldots, x_N^t, e)$$

...

$$X_N = x_N^{t+1} \leftarrow P(x_N \mid x_1^{t+1}, x_2^{t+1}, \ldots, x_{N-1}^{t+1}, e)$$

In short, for i=1 to N:

$$X_i = x_i^{t+1} \leftarrow \textbf{sampled from } P(x_i \mid x^t \setminus x_i, e)$$

Gibbs Sampling (cont'd)

(Pearl, 1988)

Important: $P(x_i \mid x^t \setminus x_i) = P(x_i \mid markov^t \setminus x_i)$:

$$P(x_i \mid x^t \setminus x_i) \propto P(x_i \mid pa_i) \prod_{X_j \in ch_i} P(x_j \mid pa_j)$$

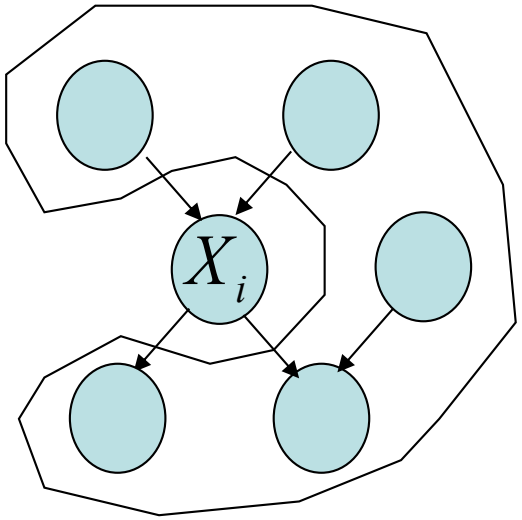

Markov blanket:

$$M(X_i) = pa_i \cup ch_i \cup (\bigcup_{X_j \in ch_j} pa_j)$$

Given *Markov blanket*

(parents, children,and their parents),

X_i is independent of all other nodes

Ordered Gibbs Sampling Algorithm

Input: X, E

Output: T samples $\{x^t\}$

- Fix evidence E
- Generate samples from P(X | E)

1. For t = 1 to T (compute samples)
2. For i = 1 to N (loop through variables)
3. $X_i \leftarrow$ sample x_i^t from $P(X_i \mid markov^t \setminus X_i)$

Answering Queries

- **Query**: $P(x_i \mid e) = ?$
- **Method 1**: count #of samples where $X_i = x_i$:

$$\overline{P}(X_i = x_i) = \frac{\#samples(X_i = x_i)}{T}$$

Method 2: average probability (mixture estimator):

$$\overline{P}(X_i = x_i) = \frac{1}{T}\sum_{t=1}^{n} P(X_i = x_i \mid markov^t \setminus X_i)$$

Gibbs Sampling Example - BN

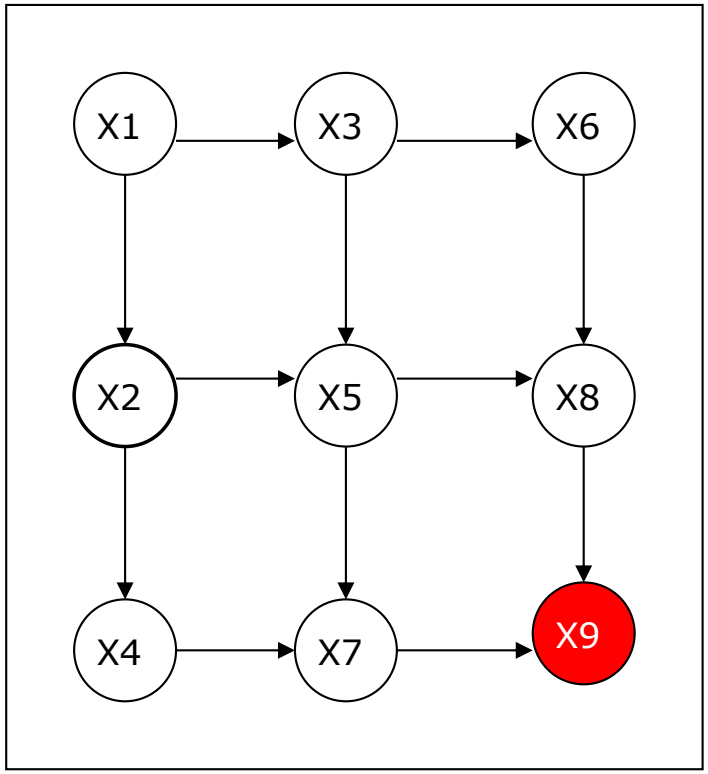

$$X = \{X_1, X_2, \ldots, X_9\}$$

$$E = \{X_9\}$$

Gibbs Sampling Example - BN

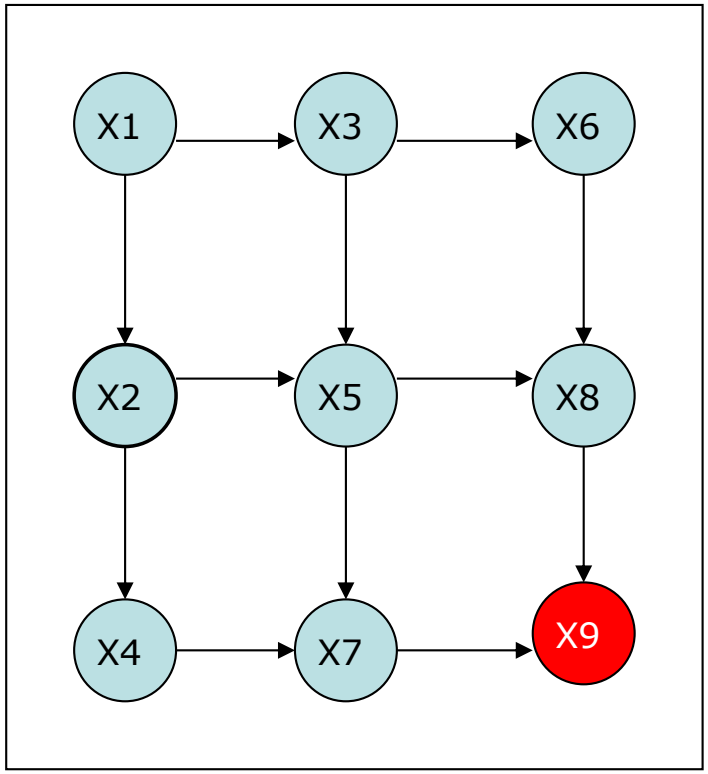

$$X_1 = x_1^0 \qquad X_6 = x_6^0$$

$$X_2 = x_2^0 \qquad X_7 = x_7^0$$

$$X_3 = x_3^0 \qquad X_8 = x_8^0$$

$$X_4 = x_4^0$$

$$X_5 = x_5^0$$

Gibbs Sampling Example - BN

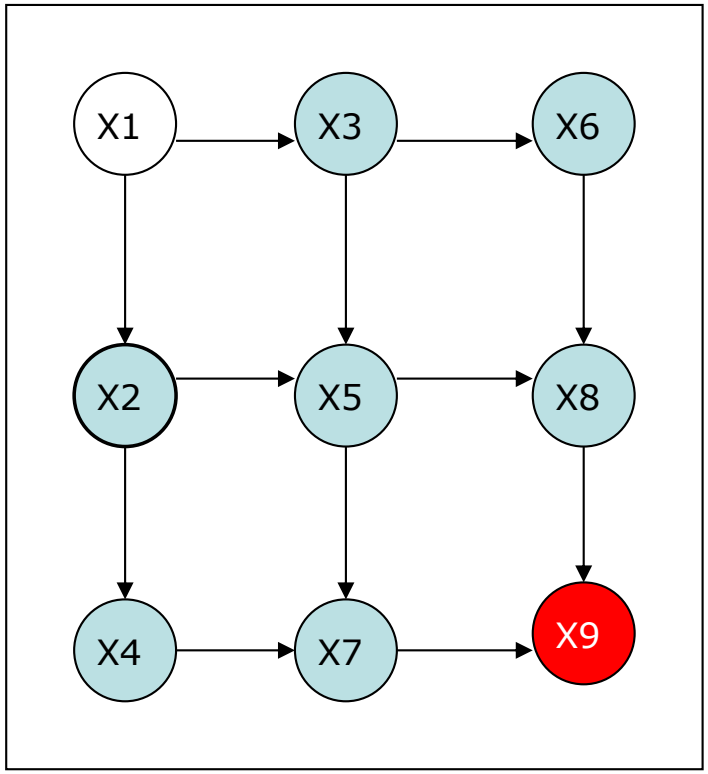

$$X_1 \leftarrow P\,(X_1 \mid X^0_2,\ldots,X^0_8, X_9\}$$

$$E = \{X_9\}$$

Gibbs Sampling Example - BN

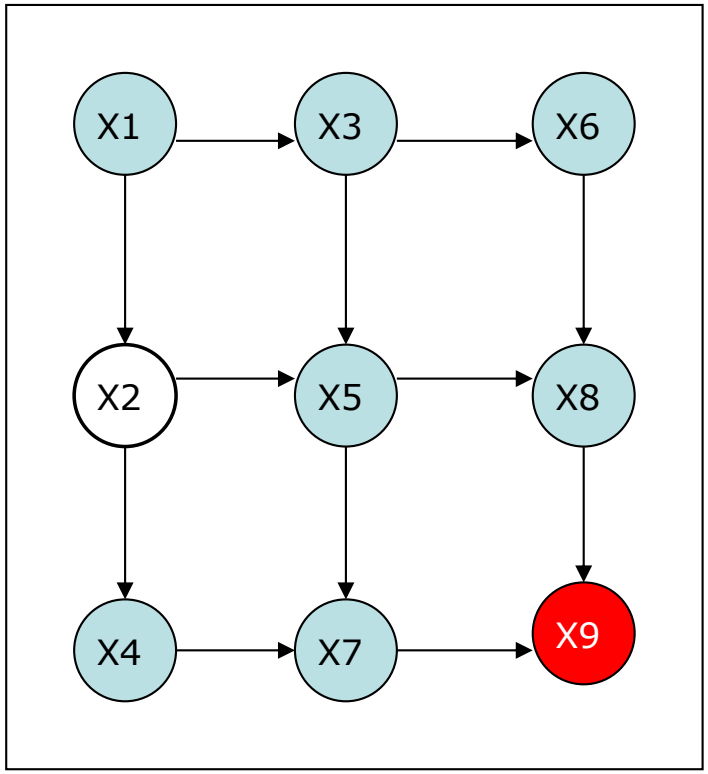

$$X_2 \leftarrow P(X_2 \mid X^1_1,\ldots,X^0_8, X_9\}$$

$$E = \{X_9\}$$

Gibbs Sampling: Illustration

The process of Gibbs sampling can be understood as a *random walk* in the space of all instantiations with $\boldsymbol{Y} = \boldsymbol{u}$:

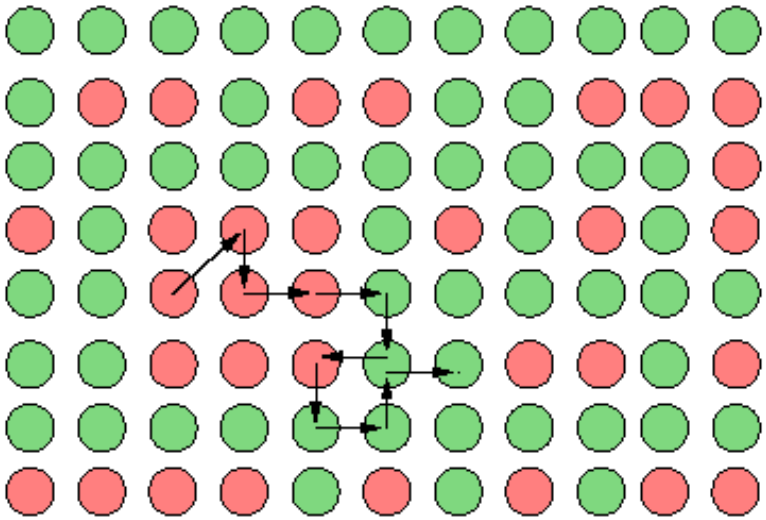

Reachable in one step: instantiations that differ from current one by value assignment to at most one variable (assume randomized choice of variable X_k).

Gibbs Sampling: Burn-In

- We want to sample from P(X | E)
- But…starting point is **random**
- Solution: throw away first K samples
- Known As "Burn-In"
- What is K ? Hard to tell. Use intuition.
- Alternatives: sample first samples from approximate P(x|e) (for example, run Loopy Belief Propagation first)

Gibbs Sampling: Convergence

- Converge to stationary distribution π^* :

$$\pi^* = \pi^* P$$

where P is a transition kernel

$$p_{ij} = P(X^i \rightarrow X^j)$$

- **Guaranteed to converge iff chain is** :
  - irreducible
  - aperiodic
  - ergodic ($\forall i,j\ p_{ij} > 0$)

Background: Irreducible

- A Markov chain (or its probability transition matrix) is said to be *irreducible* if it is possible to reach every state from every other state (not necessarily in one step).
- In other words, $\forall i,j\ \exists k : P^{(k)}_{ij} > 0$ where k is the number of steps taken to get to state j from state i.

Background: Aperiodic

- Define **d(i) = g.c.d.{n > 0 | it is possible to go from i to i in n steps}**
- Here, g.c.d. means the greatest common divisor of the integers in the set.
- **If d(i)=1 for ∀i, then chain** is *aperiodic*, i.e., returns to state i can occur at **irregular times**

Background: Ergodicity

- A *recurrent* state is a state to which the chain returns with probability 1:

$$\sum_n P^{(n)}_{ij} = \infty$$

- **Recurrent, aperiodic states are *ergodic*.**

Note: an extra condition for ergodicity is that expected recurrence time is finite. This holds for recurrent states in a finite state chain.

Background: Gibbs Sampling and Ergodicity

- Convergence to the correct distribution is guaranteed only if network is ***ergodic***: transition from any state S^i to any state S^j has non-zero probability:

$$S^i \xrightarrow{p_{ij}} S^j \qquad \boxed{p_{ij} > 0}$$

Intuition: if $\exists$i,j such that $p_{ij} = 0$, then we will not be able to explore full sampling space !

Gibbs Convergence

- Gibbs convergence is generally guaranteed as long as all probabilities are positive!
- Intuition for **ergodicity** requirement:

  if nodes X and Y are correlated s.t. $X=0 \leftrightarrow Y=0$, then:
  - once we sample and assign X=0, then we are forced to assign Y=0;
  - once we sample and assign Y=0, then we are forced to assign X=0;

➔ we will never be able to change their values again!

- **Another problem: it can take a very long time to converge!**

Gibbs Sampling: Performance

+Advantage: guaranteed to converge to P(X|E)
-Disadvantage: convergence may be slow

Problems:

- Samples are **dependent** !
- Statistical variance is too big in high-dimensional problems

Gibbs: Speeding Convergence

Objectives:

1. Reduce dependence between samples (autocorrelation)
   - Skip samples
   - Randomize Variable Sampling Order
2. Reduce variance
   - Blocking Gibbs Sampling
   - Rao-Blackwellisation

Skipping Samples

- Pick only every k-th sample (Gayer, 1992)

Can reduce dependence between samples !

Increases variance ! Waists samples !

Randomized Variable Order

Random Scan Gibbs Sampler

Pick each next variable X_i for update at random with probability p_i , $\Sigma_i\ p_i = 1$.

(In the simplest case, p_i are distributed uniformly)

In some instances, reduces variance

(MacEachern, Peruggia, 1999 "Subsampling the Gibbs Sampler: Variance Reduction")

Blocking

- Sample several variables **together, as a block**
- **Example:** Given three variables X,Y,Z, with domains of size 2, group Y and Z together to form a variable W={Y,Z} with domain size 4. Then, given sample (x^t,y^t,z^t), compute next sample:

$$X^{t+1} \leftarrow P(y^t,z^t)=P(w^t)$$

$$(y^{t+1},z^{t+1})=W^{t+1} \leftarrow P(x^{t+1})$$

+ Can improve convergence greatly when two variables are strongly correlated!

- Domain of the block variable grows exponentially with the #variables in a block!

Rao-Blackwellisation

- Do not sample all variables!
- Sample a subset!
- **Example:** Given three variables X,Y,Z, sample only X and Y, sum out Z. Given sample (x^t,y^t), compute next sample:

$$X^{t+1} \leftarrow P(y^t)$$

$$y^{t+1} \leftarrow P(x^{t+1})$$

Rao-Blackwell Theorem

Rao Blackwell Theorem: *Let a DBN have two groups of variables,* $\mathbf{R}$ *and* $\mathbf{L}$. *Then, for the joint distribution* $\pi(\mathbf{R}, \mathbf{L})$, *the following result applies*

$$\mathrm{Var}_\pi\left[\mathbb{E}_\pi\{f(\mathbf{R})|\mathbf{L}\}\right] \leq \mathrm{Var}_\pi\left[f(\mathbf{R})\right]$$

for a function of interest f, *e.g. the mean or covariance (Casella & Robert, 1996, Liu et. al. 1995).*

Bottom line: reducing number of variables in a sample reduce variance!

Gibbs: Multiple Chains

- Generate M chains of size K
- Each chain produces independent estimate P_m:

$$P_m = P(x_i \mid e) = \frac{1}{K} \sum_{t=1}^{K} P(x_i \mid x^t \setminus x_i)$$

Estimate $P(x_i|e)$ as average of $P_m(x_i|e)$:

$$\overline{P} = \frac{1}{M} \sum_{i=1}^{M} P_m$$

Treat P_m as independent random variables.

Likelihood Weighting
(Fung and Chang, 1990; Shachter and Peot, 1990)

"Clamping" evidence
+ forward sampling
+ weighing samples by evidence likelihood

Works well for *likely evidence!*

Likelihood Weighting

Sample in topological order over **X** !

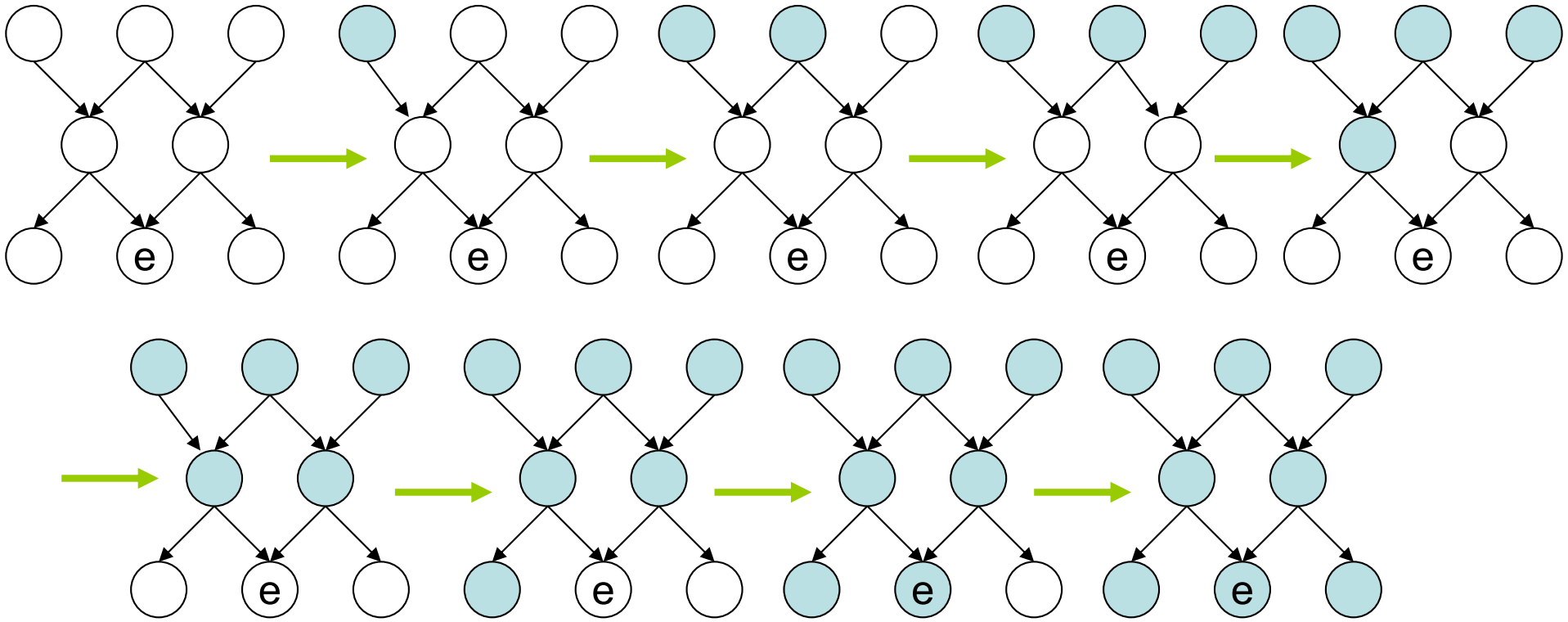

$x_i \leftarrow P(X_i|pa_i)$

$P(X_i|pa_i)$ is *a look-up* in CPT!

Likelihood Weighting

For $sample\#k = 1$ to T

For each each X_i in topological order $o = (X_1, \ldots, X_n)$:

$w_k = 1$

if $X_i \notin E$

$X_i \leftarrow$ sample x_i from $P(x_i \mid pa_i)$

else

assign $X_i = e_i$

$w_k = w_k \bullet P(e_i \mid pa_i)$

Likelihood Weighting

Estimate Posterior Marginals:

$$\hat{P}(x_i \mid e) = \frac{\hat{P}(x_i, e)}{\hat{P}(e)} = \frac{\sum_{t=1}^{T} w^{(t)} \delta(x_i, x^{(t)})}{\sum_{t=1}^{T} w^{(t)}}$$

$$w^{(t)} = \frac{P(x^{(t)})}{Q(x^{(t)})} = \prod_j P(e_j \mid pa_j^{(t)}) \text{ since } Q(e_j \mid pa_j) = 1$$

Likelihood Weighting

- Converges to exact posterior marginals
- Generates Samples Fast
- Sampling distribution is close to prior (especially if $E \subset$ Leaf Nodes)
- Increasing sampling variance

$\Rightarrow$Convergence may be slow

$\Rightarrow$Many samples with $P(x^{(t)})=0$ rejected