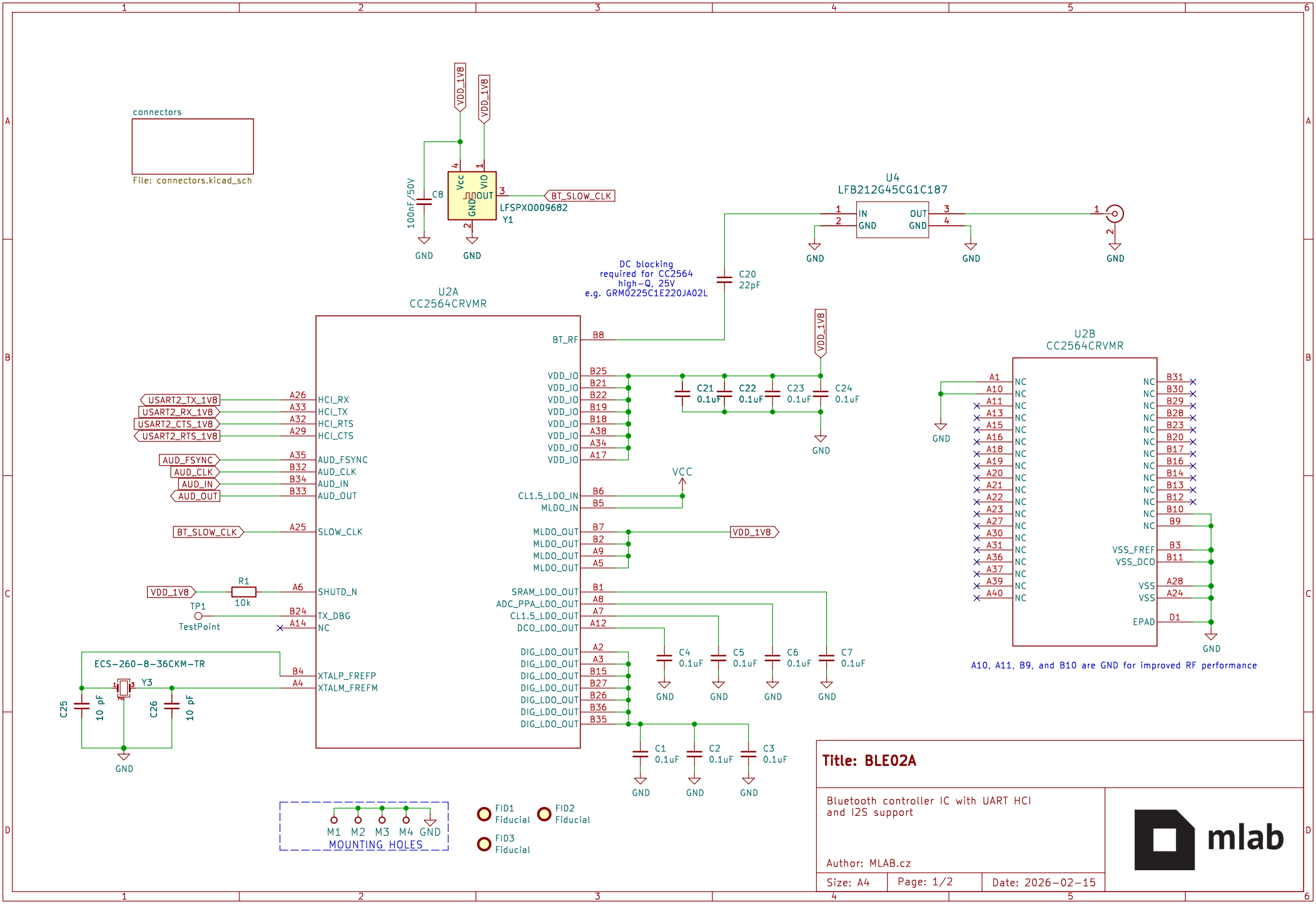
connectors
File: connectors.kicad_sch
VDD_1V8
VDD_1V8
C8
100nF/50V
Vcc
VIO
GND
OUT
BT_SLOW_CLK
LFSPX0009682
Y1
GND
GND
U4
LFB212G45CG1C187
IN
GND
OUT
GND
GND
GND
GND
DC blocking
required for CC2564
high-Q, 25V
e.g. GRM0225C1E220JA02L
C20
22pF
U2A
CC2564CRVMR
BT_RF
B8
VDD_IO
B25
B21
B22
B19
B18
A38
A34
A17
C21
0.1uF
C22
0.1uF
C23
0.1uF
C24
0.1uF
VDD_1V8
GND
USART2_TX_1V8
USART2_RX_1V8
USART2_CTS_1V8
USART2_RTS_1V8
A26
A33
A32
A29
HCI_RX
HCI_TX
HCI_RTS
HCI_CTS
AUD_FSYNC
AUD_CLK
AUD_IN
AUD_OUT
A35
B32
B34
B33
AUD_FSYNC
AUD_CLK
AUD_IN
AUD_OUT
BT_SLOW_CLK
A25
SLOW_CLK
VCC
CL1.5_LDO_IN
MLDO_IN
B6
B5
MLDO_OUT
B7
B2
A9
A5
VDD_1V8
VDD_1V8
R1
10k
A6
SHUTD_N
TP1
TestPoint
B24
A14
TX_DBG
NC
SRAM_LDO_OUT
ADC_PPA_LDO_OUT
CL1.5_LDO_OUT
DCO_LDO_OUT
B1
A8
A7
A12
C4
0.1uF
C5
0.1uF
C6
0.1uF
C7
0.1uF
GND
GND
GND
GND
ECS-260-8-36CKM-TR
Y3
B4
A4
XTALP_FREFP
XTALM_FREFM
C25
10 pF
C26
10 pF
GND
DIG_LDO_OUT
A2
A3
B15
B27
B26
B36
B35
C1
0.1uF
C2
0.1uF
C3
0.1uF
GND
GND
GND
U2B
CC2564CRVMR
A1
A10
A11
A13
A15
A16
A18
A19
A20
A21
A22
A23
A27
A30
A31
A36
A37
A39
A40
NC
B31
B30
B29
B28
B23
B20
B17
B16
B14
B13
B12
B10
B9
VSS_FREF
VSS_DCO
B3
B11
VSS
VSS
A28
A24
EPAD
D1
GND
GND
A10, A11, B9, and B10 are GND for improved RF performance
M1 M2 M3 M4 GND
MOUNTING HOLES
FID1
Fiducial
FID2
Fiducial
FID3
Fiducial
Title: BLE02A
Bluetooth controller IC with UART HCI
and I2S support
Author: MLAB.cz
Size: A4
Page: 1/2
Date: 2026-02-15
mlab

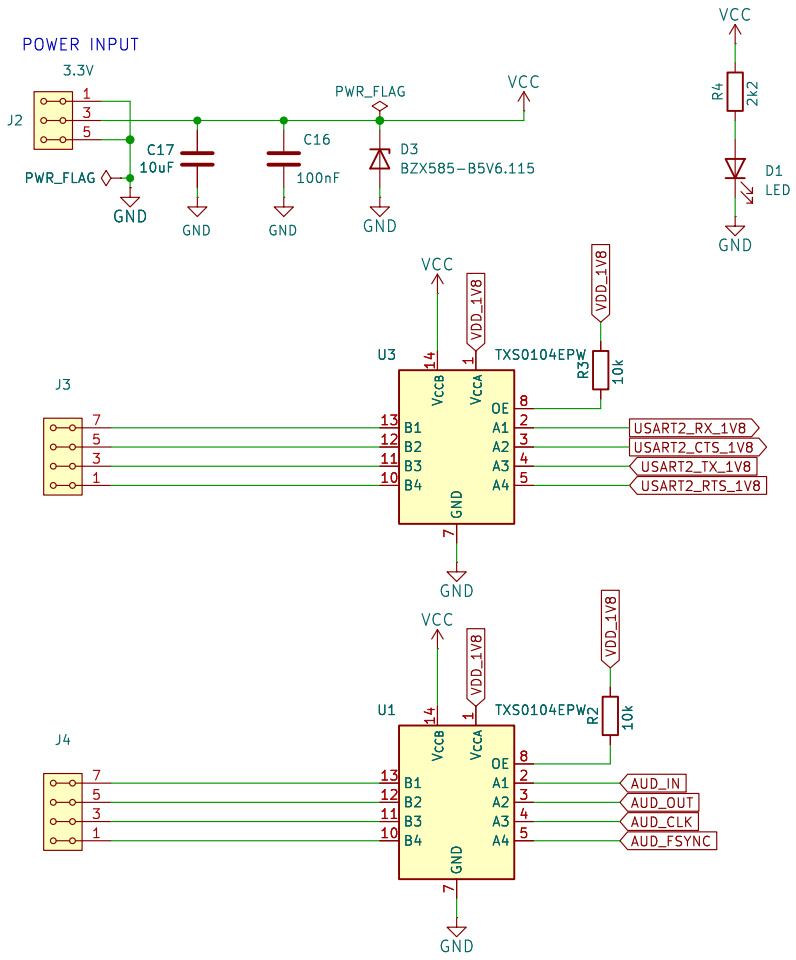

Title:

Author:

Size: A4 | Page: 2/2 | Date: 2026-02-15

mlab