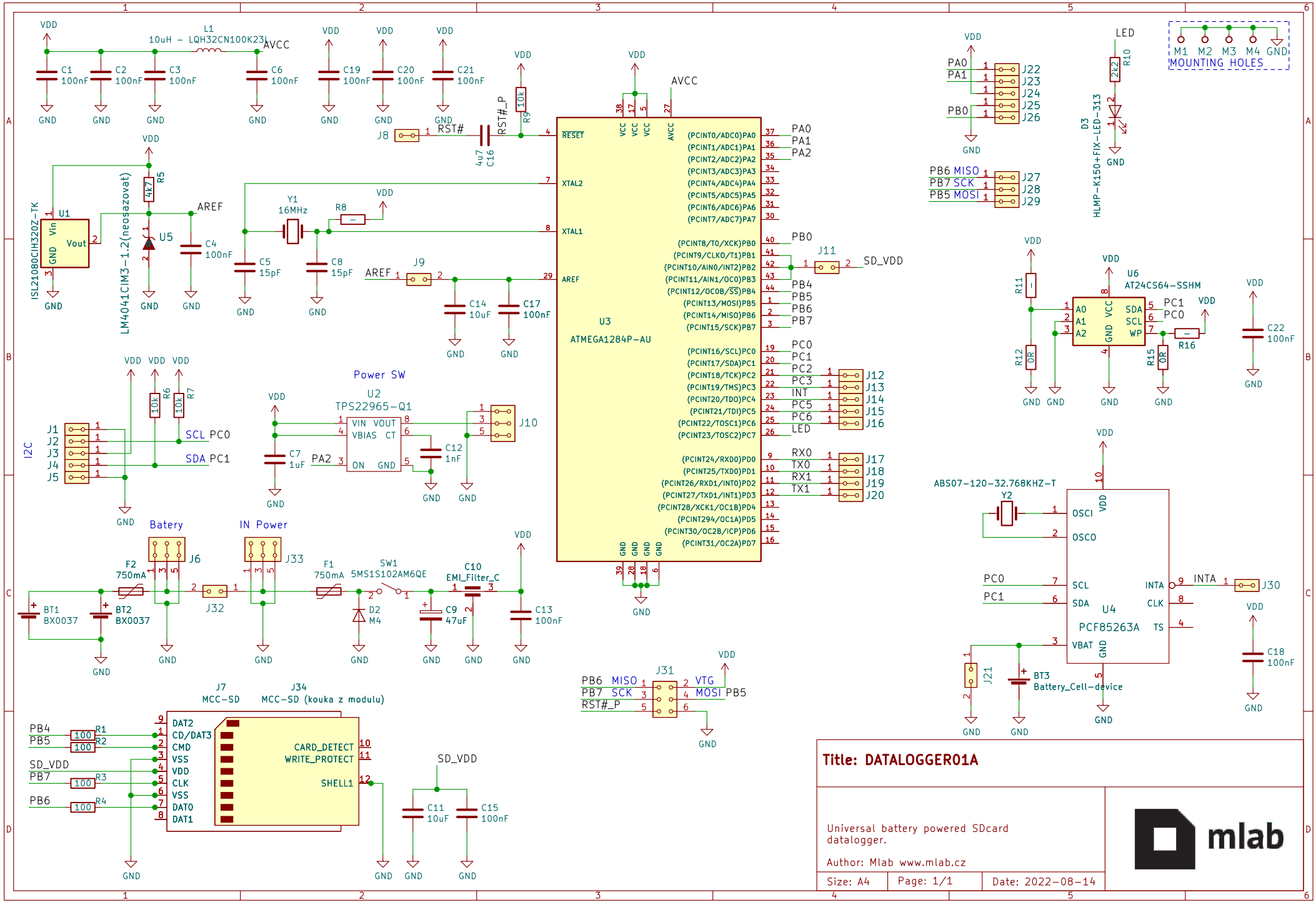
Title: DATALOGGER01A
Universal battery powered SDcard datalogger.
Author: Mlab www.mlab.cz
Size: A4
Page: 1/1
Date: 2022-08-14
mlab
U3
ATMEGA1284P-AU
U2
TPS22965-Q1
Power SW
U4
PCF85263A
U6
AT24CS64-SSHM
Y2
ABS07-120-32.768KHZ-T
Y1
16MHz
L1
10uH - LQH32CN100K23L
AVCC
AREF
VDD
GND
I2C
SCL PC0
SDA PC1
Batery
IN Power
BT1
BX0037
BT2
BX0037
F2
750mA
F1
750mA
SW1
5MS1S102AM6QE
C10
EMI_Filter_C
D2
M4
C9
47uF
C13
100nF
J7
MCC-SD
J34
MCC-SD (kouka z modulu)
DAT2
CD/DAT3
CMD
VSS
VDD
CLK
VSS
DAT0
DAT1
CARD_DETECT
WRITE_PROTECT
SHELL1
SD_VDD
J31
VTG
MOSI PB5
RST#_P
RST#
J8
J9
J11
J10
J12
J13
J14
J15
J16
J17
J18
J19
J20
J22
J23
J24
J25
J26
J27
J28
J29
J30
J21
J32
J6
J33
LED
D3
HLMP-K150+FIX-LED-313
R10
2k2
M1 M2 M3 M4 GND
MOUNTING HOLES
BT3
Battery_Cell-device
INTA
PB6 MISO
PB7 SCK
PB5 MOSI
PA0
PA1
PB0
PC0
PC1
PC2
PC3
INT
PC5
PC6
RX0
TX0
RX1
TX1
PA2
PB4
PB5
PB6
PB7
ISL21080CIH320Z-TK
LM4041CIM3-1.2(neosazovat)