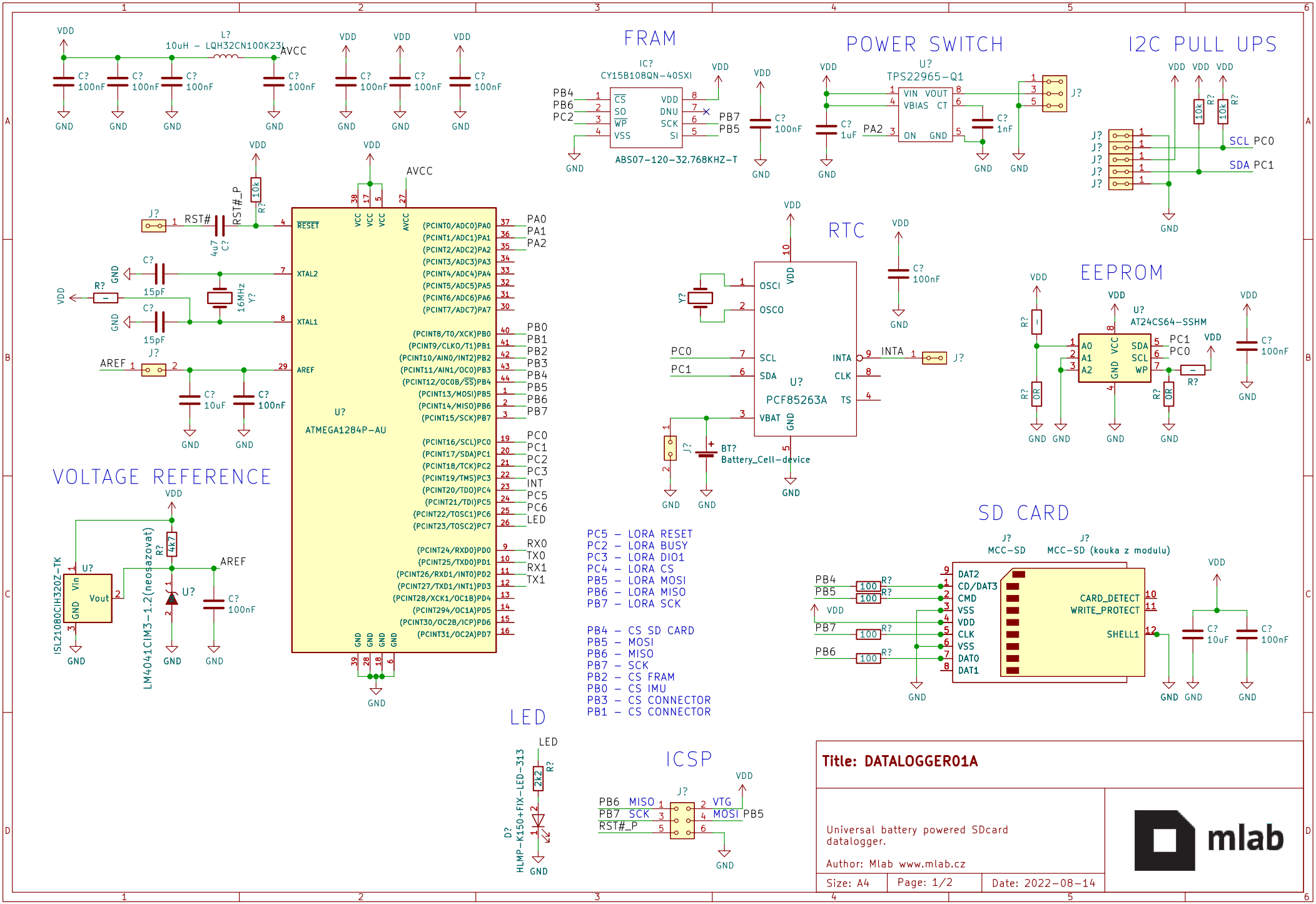
FRAM
IC?
CY15B108QN-40SXI
ABS07-120-32.768KHZ-T
POWER SWITCH
U?
TPS22965-Q1
I2C PULL UPS
SCL PC0
SDA PC1
RTC
U?
PCF85263A
BT?
Battery_Cell-device
EEPROM
U?
AT24CS64-SSHM
ATMEGA1284P-AU
VOLTAGE REFERENCE
ISL21080CIH320Z-TK
LM4041CIM3-1.2(neosazovat)
SD CARD
J?
MCC-SD
MCC-SD (kouka z modulu)
CARD_DETECT
WRITE_PROTECT
SHELL1
LED
HLMP-K150+FIX-LED-313
ICSP
PB6 MISO
PB7 SCK
RST#_P
VTG
MOSI PB5
PC5 – LORA RESET
PC2 – LORA BUSY
PC3 – LORA DIO1
PC4 – LORA CS
PB5 – LORA MOSI
PB6 – LORA MISO
PB7 – LORA SCK
PB4 – CS SD CARD
PB5 – MOSI
PB6 – MISO
PB7 – SCK
PB2 – CS FRAM
PB0 – CS IMU
PB3 – CS CONNECTOR
PB1 – CS CONNECTOR
Title: DATALOGGER01A
Universal battery powered SDcard datalogger.
Author: Mlab www.mlab.cz
Size: A4
Page: 1/2
Date: 2022-08-14
mlab

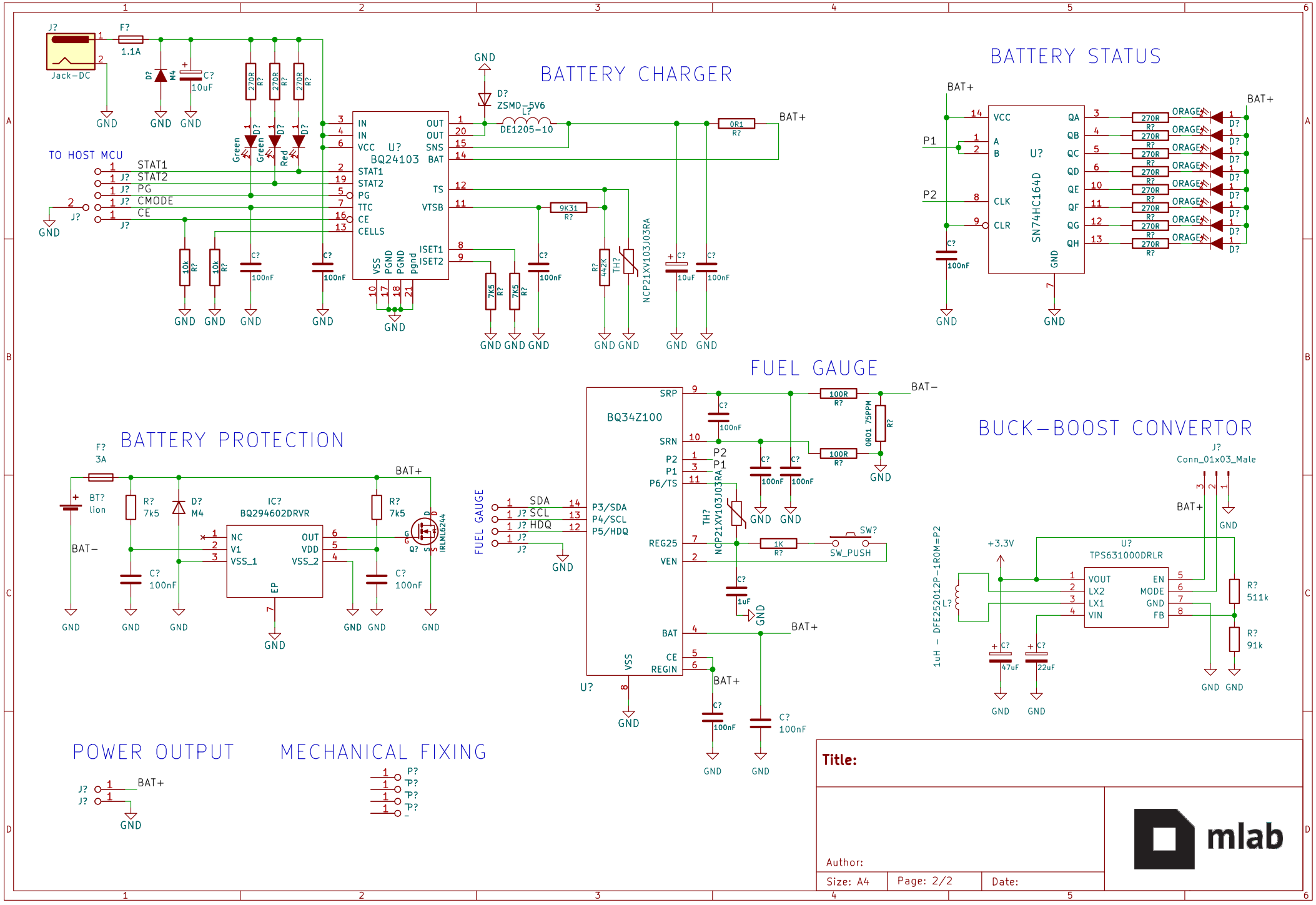
BATTERY CHARGER
BATTERY STATUS
FUEL GAUGE
BATTERY PROTECTION
BUCK-BOOST CONVERTOR
POWER OUTPUT
MECHANICAL FIXING
TO HOST MCU
FUEL GAUGE
BQ24103
SN74HC164D
BQ34Z100
BQ294602DRVR
TPS631000DRLR
DE1205-10
NCP21XV103J03RA
IRLML6244
Jack-DC
Conn_01x03_Male
Title:
Author:
Size: A4
Page: 2/2
Date:
mlab