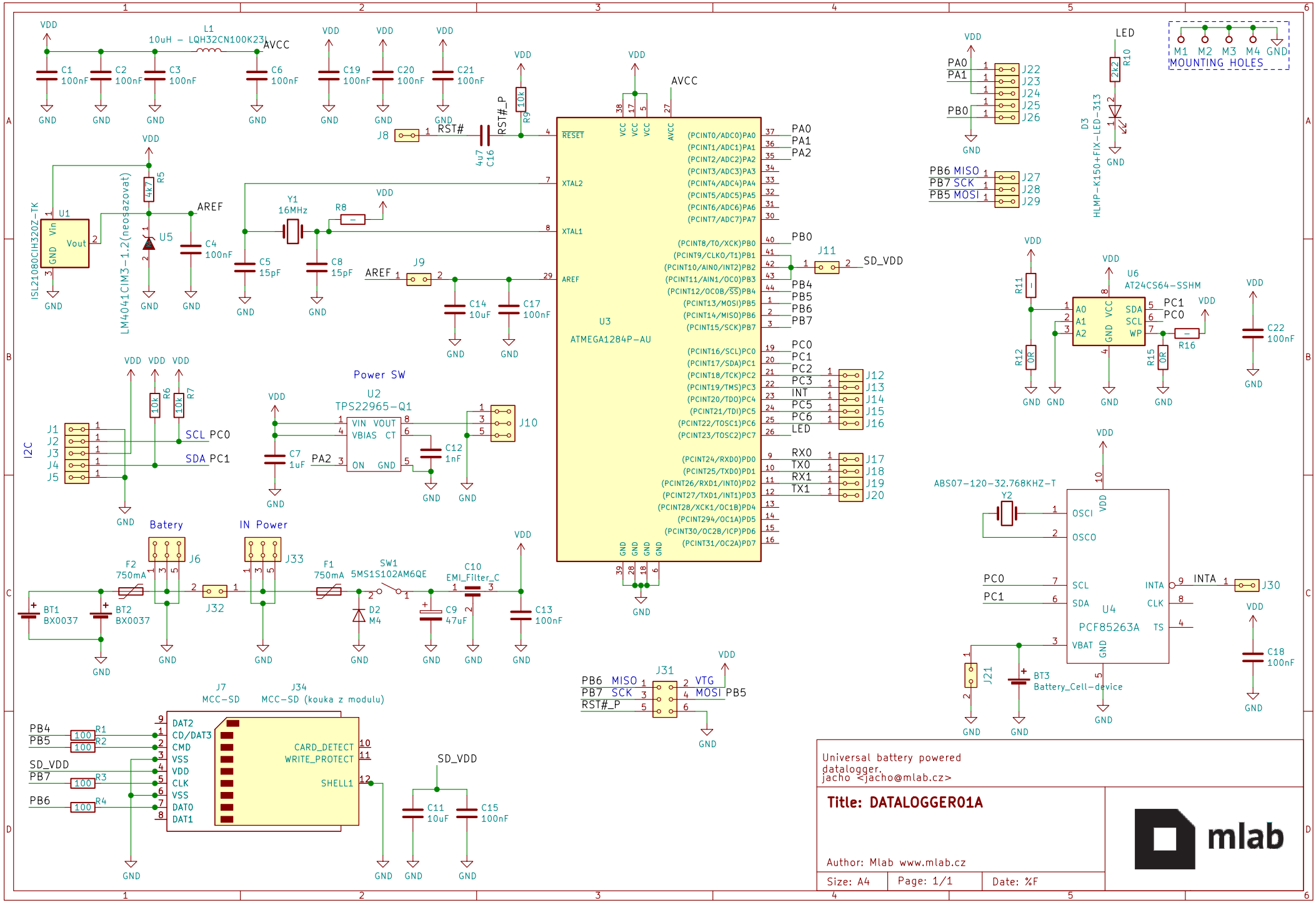
L1
10uH – LQH32CN100K23L
AVCC
VDD
GND
C1 100nF
C2 100nF
C3 100nF
C6 100nF
C19 100nF
C20 100nF
C21 100nF
J8
RST#
RST#_P
R9 10k
C16 4u7
U3
ATMEGA1284P-AU
RESET
XTAL2
XTAL1
AREF
VCC
AVCC
(PCINT0/ADC0)PA0
(PCINT1/ADC1)PA1
(PCINT2/ADC2)PA2
(PCINT3/ADC3)PA3
(PCINT4/ADC4)PA4
(PCINT5/ADC5)PA5
(PCINT6/ADC6)PA6
(PCINT7/ADC7)PA7
(PCINT8/T0/XCK)PB0
(PCINT9/CLKO/T1)PB1
(PCINT10/AIN0/INT2)PB2
(PCINT11/AIN1/OC0)PB3
(PCINT12/OC0B/SS)PB4
(PCINT13/MOSI)PB5
(PCINT14/MISO)PB6
(PCINT15/SCK)PB7
(PCINT16/SCL)PC0
(PCINT17/SDA)PC1
(PCINT18/TCK)PC2
(PCINT19/TMS)PC3
(PCINT20/TDO)PC4
(PCINT21/TDI)PC5
(PCINT22/TOSC1)PC6
(PCINT23/TOSC2)PC7
(PCINT24/RXD0)PD0
(PCINT25/TXD0)PD1
(PCINT26/RXD1/INT0)PD2
(PCINT27/TXD1/INT1)PD3
(PCINT28/XCK1/OC1B)PD4
(PCINT294/OC1A)PD5
(PCINT30/OC2B/ICP)PD6
(PCINT31/OC2A)PD7
J11
SD_VDD
J12
J13
J14
J15
J16
J17
J18
J19
J20
LED
INT
RX0
TX0
RX1
TX1
J22
J23
J24
J25
J26
J27
J28
J29
R10 2k2
D3
HLMP-K150+FIX-LED-313
M1 M2 M3 M4 GND
MOUNTING HOLES
U1
ISL21080CIH320Z-TK
Vin
Vout
R5 4k7
U5
LM4041CIM3-1.2(neosazovat)
C4 100nF
Y1
16MHz
R8
C5 15pF
C8 15pF
J9
C14 10uF
C17 100nF
U6
AT24CS64-SSHM
A0
A1
A2
SDA
SCL
WP
R11
R12 0R
R15 0R
R16
C22 100nF
J1
J2
J3
J4
J5
I2C
R6 10k
R7 10k
SCL PC0
SDA PC1
Power SW
U2
TPS22965-Q1
VIN VOUT
VBIAS CT
ON GND
C7 1uF
PA2
C12 1nF
J10
Y2
ABS07-120-32.768KHZ-T
OSCI
OSCO
U4
PCF85263A
INTA
CLK
TS
VBAT
J30
J21
BT3
Battery_Cell-device
C18 100nF
Batery
IN Power
J6
J33
F2 750mA
J32
F1 750mA
SW1
5MS1S102AM6QE
C10
EMI_Filter_C
BT1
BX0037
BT2
BX0037
D2
M4
C9 47uF
C13 100nF
J31
VTG
MOSI
J7
MCC-SD
J34
MCC-SD (kouka z modulu)
DAT2
CD/DAT3
CMD
VSS
VDD
CLK
VSS
DAT0
DAT1
CARD_DETECT
WRITE_PROTECT
SHELL1
R1 100
R2 100
R3 100
R4 100
C11 10uF
C15 100nF
Universal battery powered
datalogger.
jacho <jacho@mlab.cz>
Title: DATALOGGER01A
Author: Mlab www.mlab.cz
Size: A4
Page: 1/1
Date: %F
mlab