Power_management

File: Power_management.kicad_sch

Microcontroller

File: Microcontroller.kicad_sch

Peripherals

File: Peripherals.kicad_sch

Connectors

File: Connectors.kicad_sch

Title: DATALOGGER01A

Universal battery powered SDcard datalogger.

Author: Mlab www.mlab.cz

Size: A4	Page: 1/6	Date: 2022-08-14

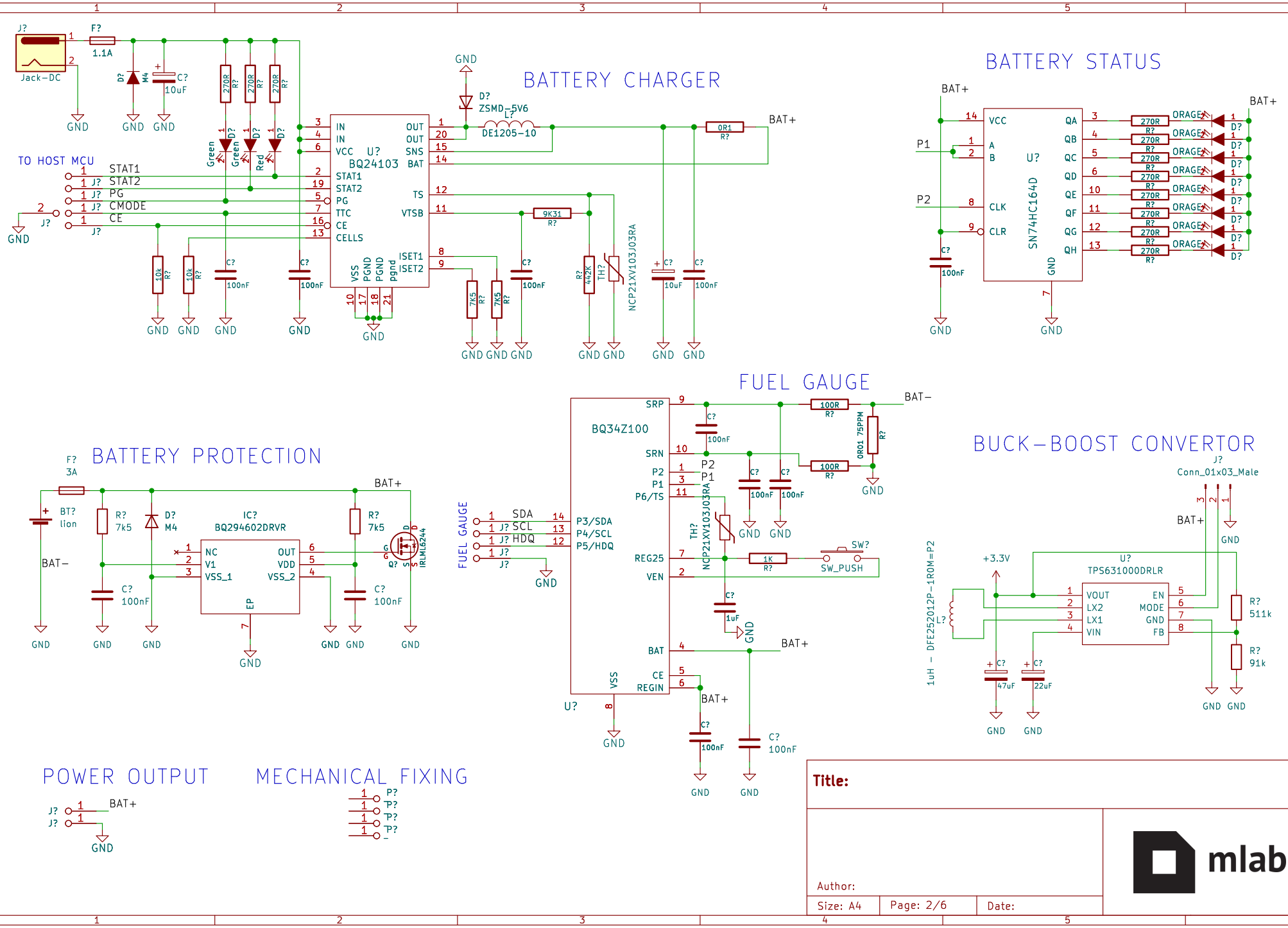
BATTERY CHARGER
BATTERY STATUS
BATTERY PROTECTION
FUEL GAUGE
BUCK–BOOST CONVERTOR
POWER OUTPUT
MECHANICAL FIXING
Jack–DC
BQ24103
DE1205–10
ZSMD–5V6
SN74HC164D
BQ294602DRVR
IRLML6244
BQ34Z100
NCP21XV103J03RA
TPS631000DRLR
TO HOST MCU
STAT1
STAT2
PG
CMODE
CE
SDA
SCL
HDQ
BAT+
BAT–
GND
Title:
Author:
Size: A4
Page: 2/6
Date:
mlab

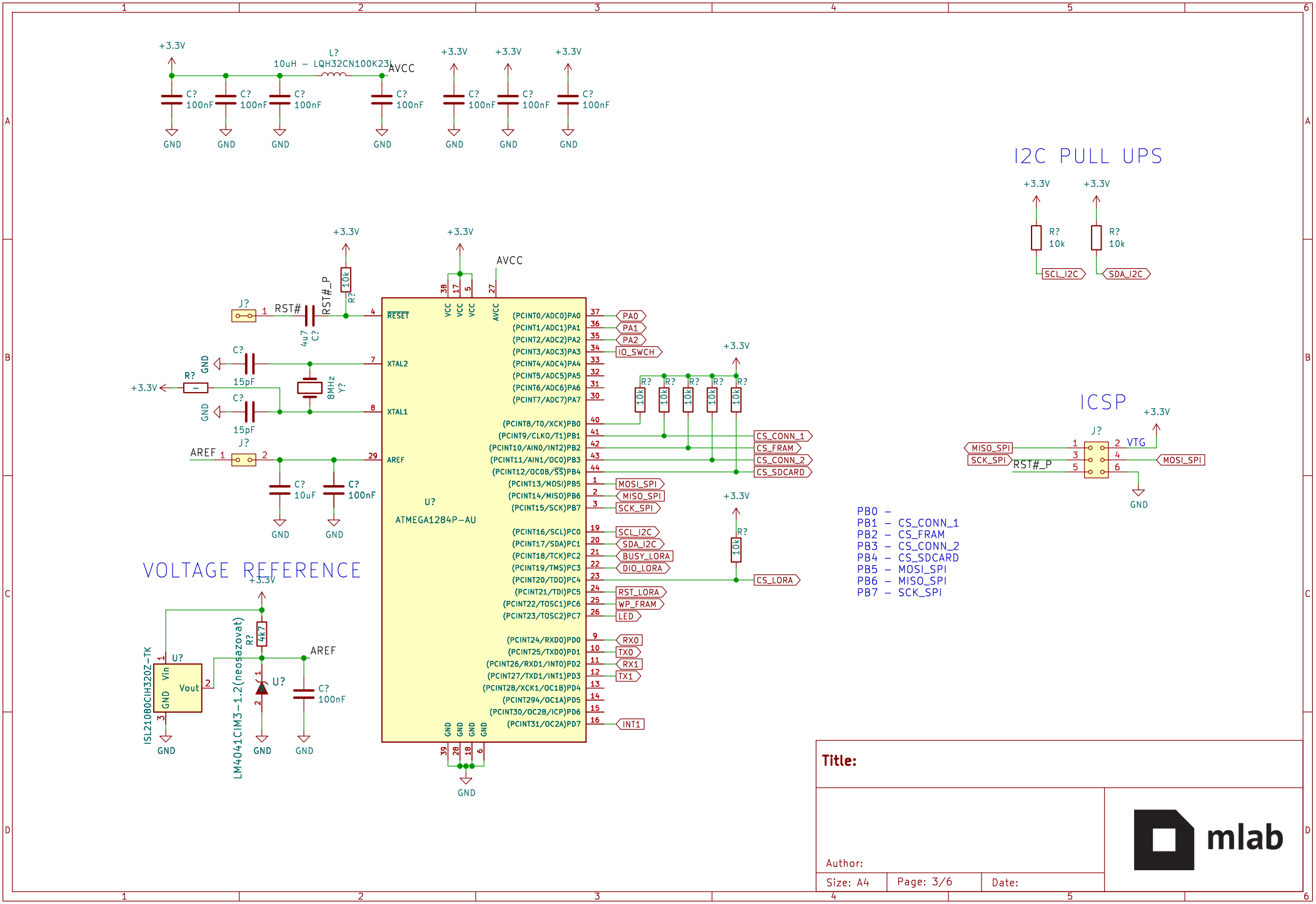

+3.3V
L?
10uH – LQH32CN100K23L
AVCC
C? 100nF
GND
I2C PULL UPS
R? 10k
SCL_I2C
SDA_I2C
ICSP
J?
VTG
MISO_SPI
SCK_SPI
RST#_P
MOSI_SPI
RST#
RST#_P
4u7
10k
R?
C?
15pF
8MHz
Y?
AREF
10uF
U?
ATMEGA1284P-AU
RESET
XTAL2
XTAL1
AREF
VCC
AVCC
(PCINT0/ADC0)PA0
(PCINT1/ADC1)PA1
(PCINT2/ADC2)PA2
(PCINT3/ADC3)PA3
(PCINT4/ADC4)PA4
(PCINT5/ADC5)PA5
(PCINT6/ADC6)PA6
(PCINT7/ADC7)PA7
(PCINT8/T0/XCK)PB0
(PCINT9/CLKO/T1)PB1
(PCINT10/AIN0/INT2)PB2
(PCINT11/AIN1/OC0)PB3
(PCINT12/OC0B/SS)PB4
(PCINT13/MOSI)PB5
(PCINT14/MISO)PB6
(PCINT15/SCK)PB7
(PCINT16/SCL)PC0
(PCINT17/SDA)PC1
(PCINT18/TCK)PC2
(PCINT19/TMS)PC3
(PCINT20/TDO)PC4
(PCINT21/TDI)PC5
(PCINT22/TOSC1)PC6
(PCINT23/TOSC2)PC7
(PCINT24/RXD0)PD0
(PCINT25/TXD0)PD1
(PCINT26/RXD1/INT0)PD2
(PCINT27/TXD1/INT1)PD3
(PCINT28/XCK1/OC1B)PD4
(PCINT294/OC1A)PD5
(PCINT30/OC2B/ICP)PD6
(PCINT31/OC2A)PD7
PA0
PA1
PA2
IO_SWCH
CS_CONN_1
CS_FRAM
CS_CONN_2
CS_SDCARD
MOSI_SPI
MISO_SPI
SCK_SPI
SCL_I2C
SDA_I2C
BUSY_LORA
DIO_LORA
CS_LORA
RST_LORA
WP_FRAM
LED
RX0
TX0
RX1
TX1
INT1
VOLTAGE REFERENCE
ISL21080CIH320Z-TK
Vin
Vout
LM4041CIM3-1.2(neosazovat)
4k7
PB0 –
PB1 – CS_CONN_1
PB2 – CS_FRAM
PB3 – CS_CONN_2
PB4 – CS_SDCARD
PB5 – MOSI_SPI
PB6 – MISO_SPI
PB7 – SCK_SPI
Title:
Author:
Size: A4
Page: 3/6
Date:
mlab

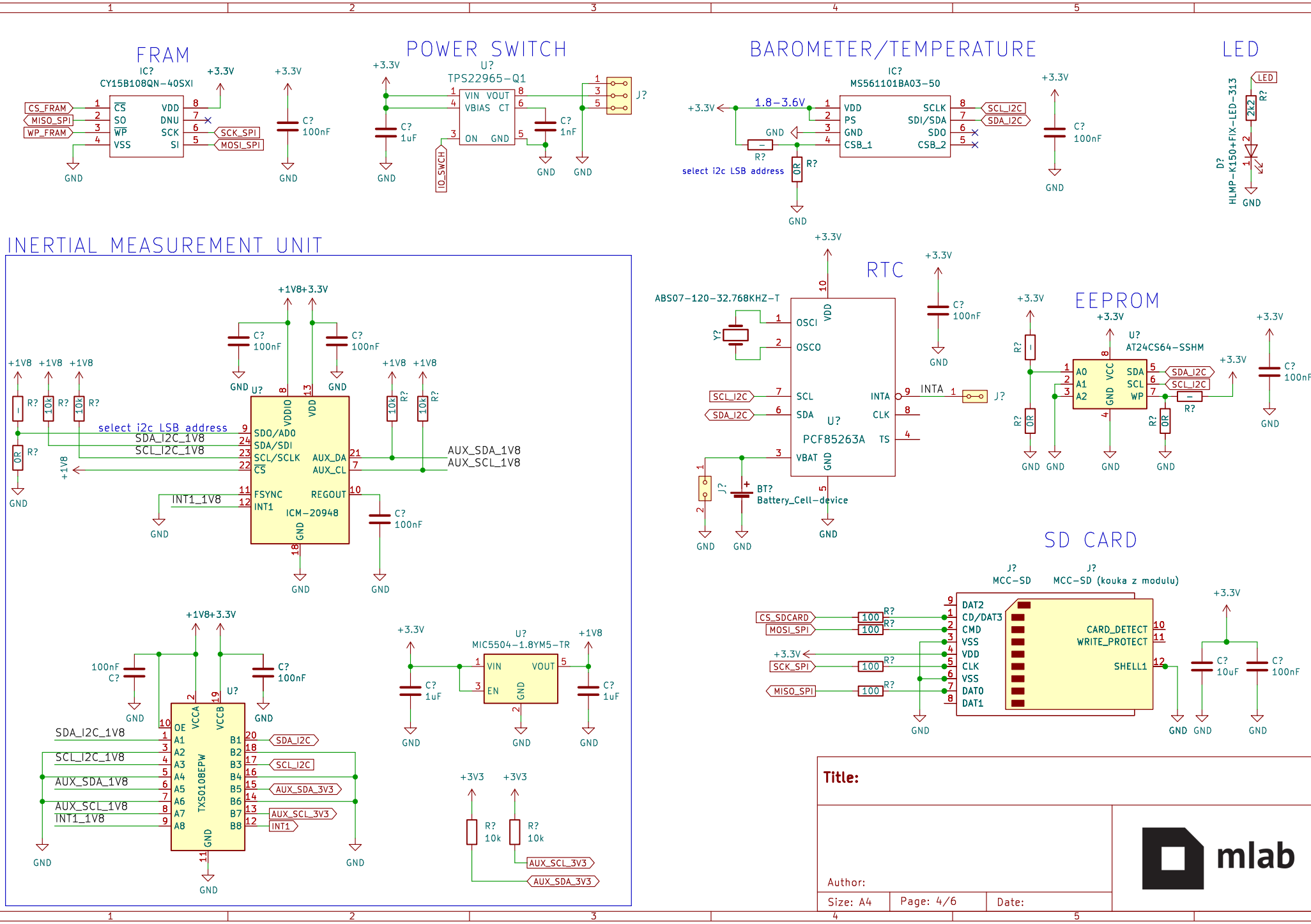
FRAM
IC?
CY15B108QN-40SXI
+3.3V
CS_FRAM
MISO_SPI
WP_FRAM
CS
SO
WP
VSS
VDD
DNU
SCK
SI
SCK_SPI
MOSI_SPI
GND
C?
100nF
POWER SWITCH
U?
TPS22965-Q1
VIN VOUT
VBIAS CT
ON GND
C?
1uF
C?
1nF
IO_SWCH
J?
BAROMETER/TEMPERATURE
IC?
MS561101BA03-50
1.8-3.6V
VDD
PS
GND
CSB_1
SCLK
SDI/SDA
SDO
CSB_2
SCL_I2C
SDA_I2C
select i2c LSB address
R?
0R
LED
D?
HLMP-K150+FIX-LED-313
2k2
INERTIAL MEASUREMENT UNIT
+1V8+3.3V
+1V8
10k
select i2c LSB address
SDA_I2C_1V8
SCL_I2C_1V8
ICM-20948
SDO/AD0
SDA/SDI
SCL/SCLK
CS
AUX_DA
AUX_CL
FSYNC
INT1
REGOUT
VDDIO
VDD
AUX_SDA_1V8
AUX_SCL_1V8
INT1_1V8
TXS0108EPW
OE
VCCA
VCCB
A1
A2
A3
A4
A5
A6
A7
A8
B1
B2
B3
B4
B5
B6
B7
B8
AUX_SDA_3V3
AUX_SCL_3V3
INT1
MIC5504-1.8YM5-TR
VIN
VOUT
EN
RTC
ABS07-120-32.768KHZ-T
Y?
OSCI
OSCO
SCL
SDA
INTA
CLK
TS
VBAT
PCF85263A
BT?
Battery_Cell-device
EEPROM
AT24CS64-SSHM
A0
A1
A2
SDA
SCL
WP
VCC
SD CARD
J?
MCC-SD
MCC-SD (kouka z modulu)
CS_SDCARD
MOSI_SPI
SCK_SPI
MISO_SPI
100
DAT2
CD/DAT3
CMD
VSS
VDD
CLK
VSS
DAT0
DAT1
CARD_DETECT
WRITE_PROTECT
SHELL1
Title:
Author:
Size: A4
Page: 4/6
Date:
mlab

PIXHAWK STANDARD HEADERS

UART CONN.

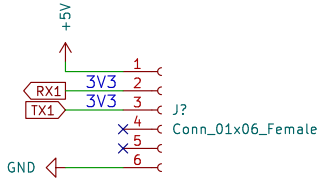

I2C CONN.

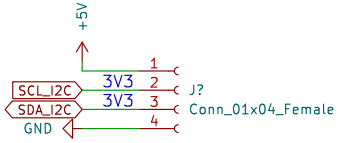

SPI CONN.

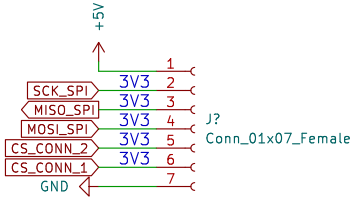

PIN HEADERS

ANALOG CONN

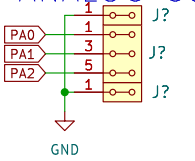

AUX_I2C CONN

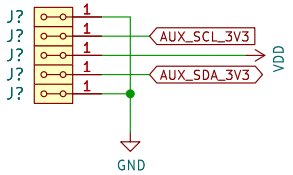

I2C CONN

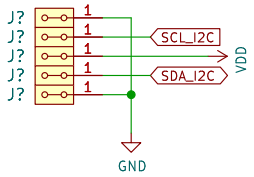

Title:

Author:

Size: A4 | Page: 5/6 | Date:

mlab

SUPERCAP MANAGEMENT

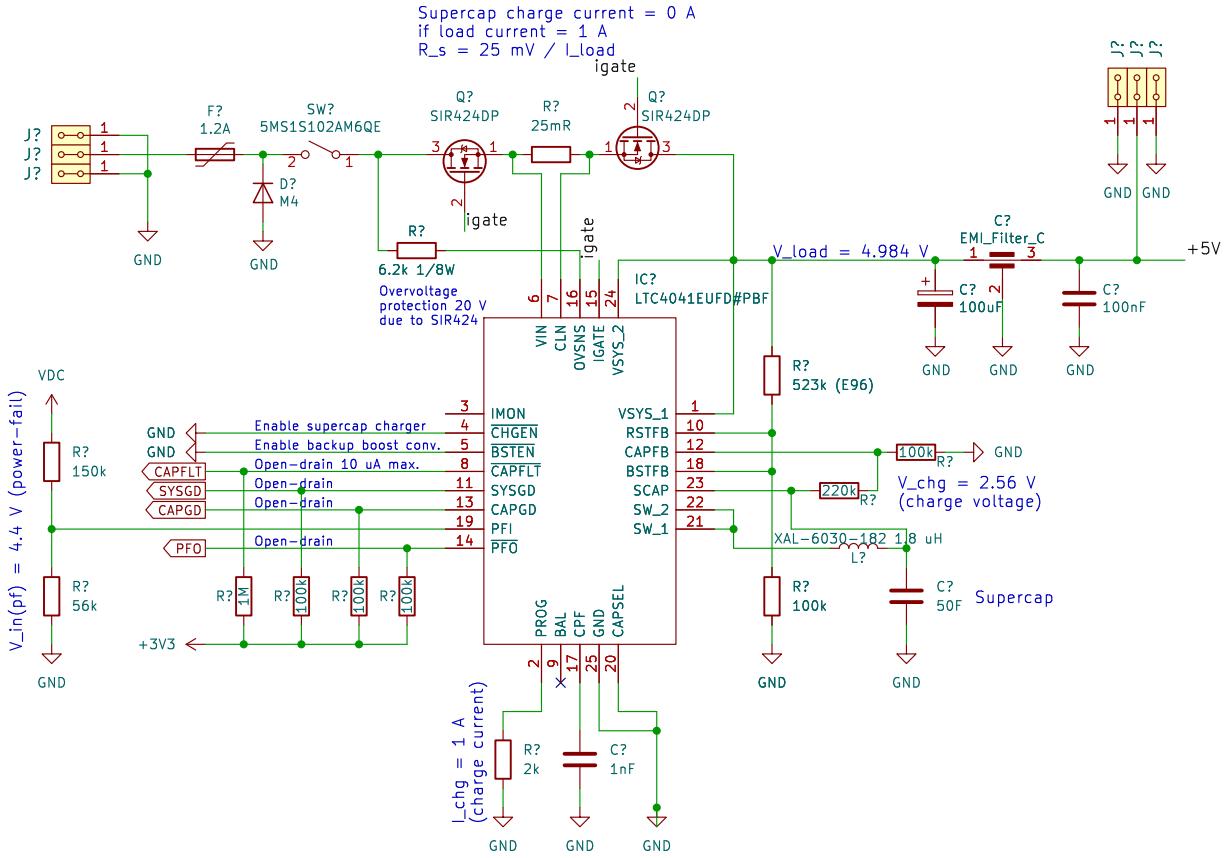

BUCK–BOOST CONVERTOR

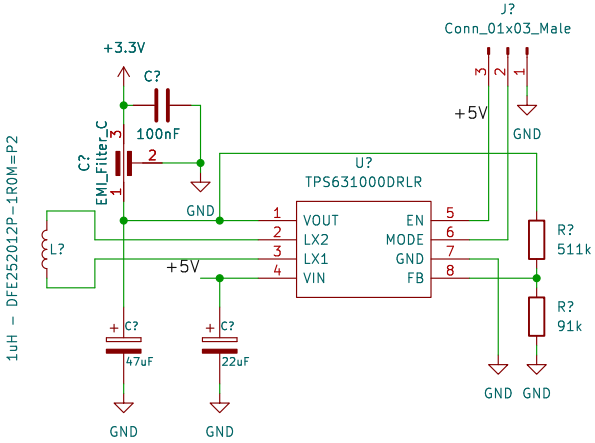

Title:		
Author:		
Size: A4	Page: 6/6	Date:

mlab