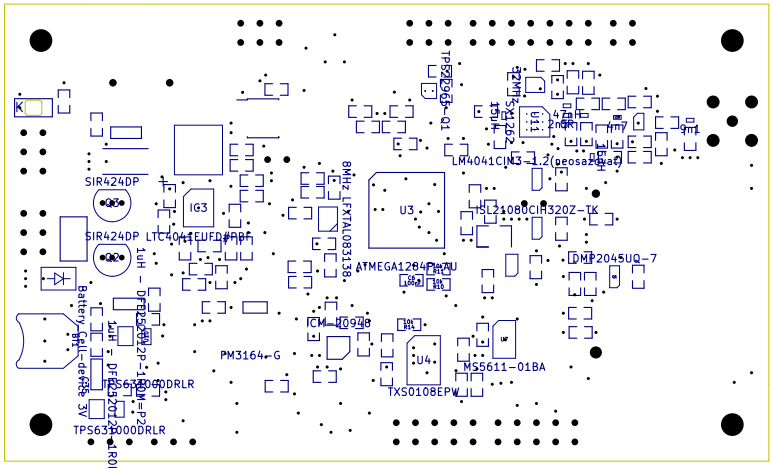

Title: DATALOGGER01A

Universal battery powered SDcard datalogger.

Author: Mlab www.mlab.cz

Size: A4	Page: 1/1	Date: %d. %m. %Y

mlab