Telemetry

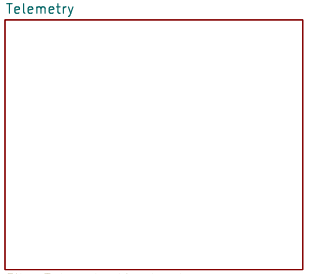

File: Telemetry.kicad_sch

Power_management

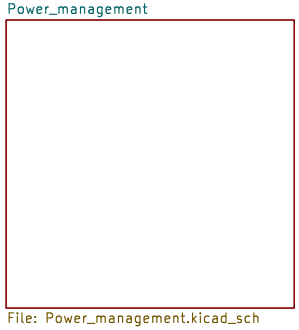

File: Power_management.kicad_sch

Microcontroller

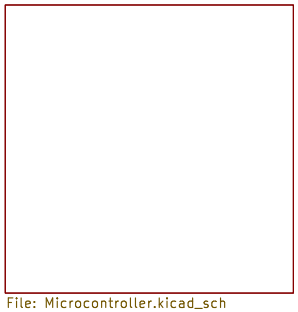

File: Microcontroller.kicad_sch

Peripherals

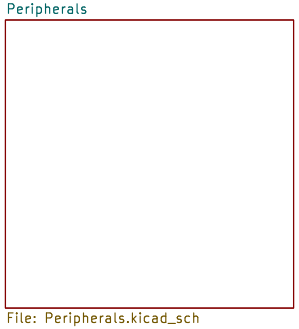

File: Peripherals.kicad_sch

Connectors

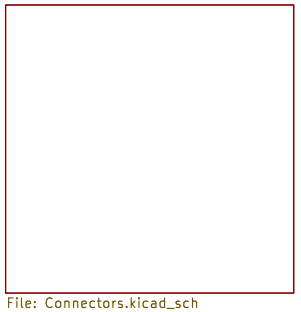

File: Connectors.kicad_sch

Title: DATALOGGER01A

Universal battery powered SDcard datalogger.

Author: Mlab www.mlab.cz

Size: A4	Page: 1/6	Date: 2022-08-14

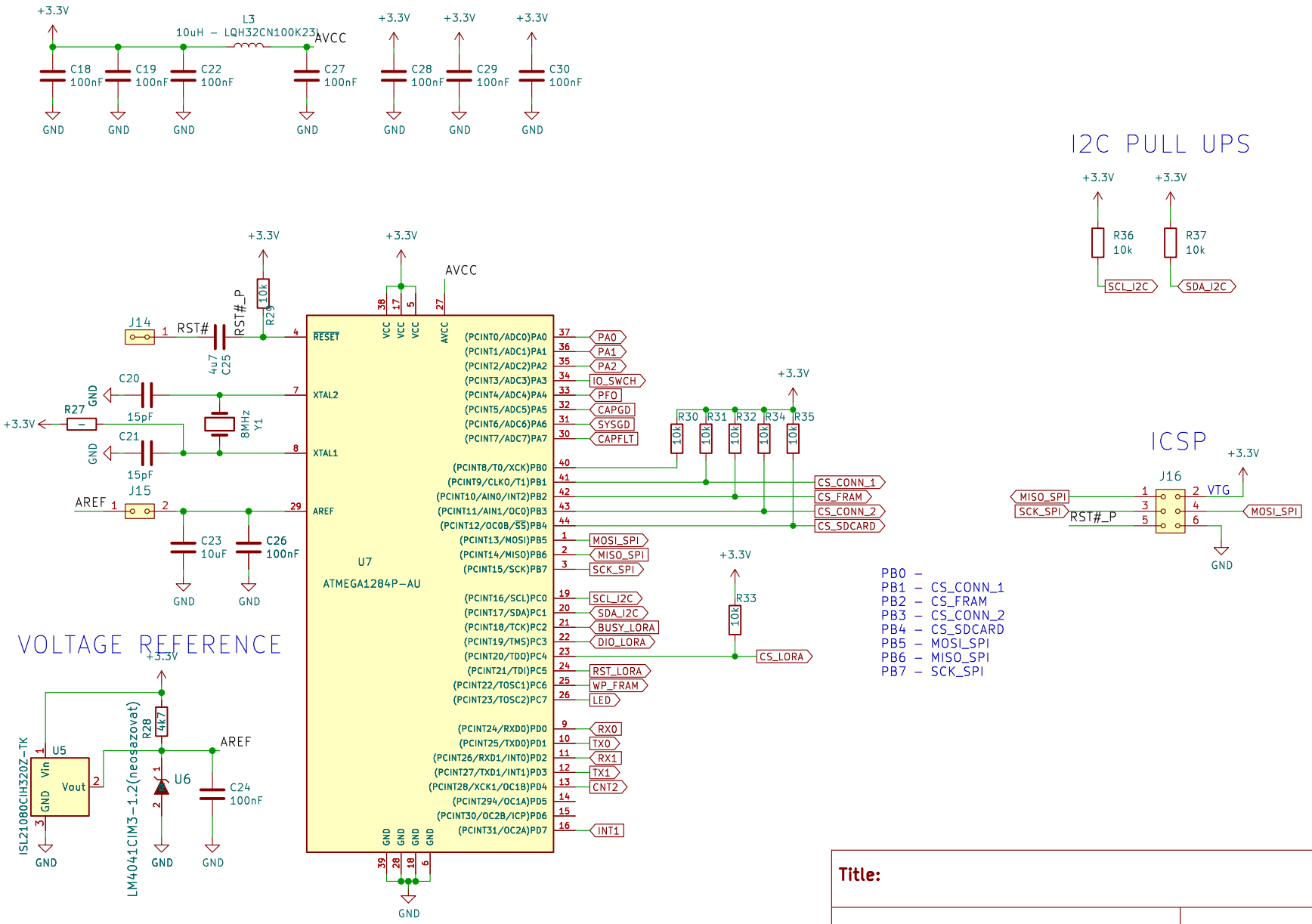
+3.3V
L3
10uH – LQH32CN100K23
AVCC
C18 100nF
C19 100nF
C22 100nF
C27 100nF
C28 100nF
C29 100nF
C30 100nF
GND
I2C PULL UPS
R36 10k
R37 10k
SCL_I2C
SDA_I2C
ICSP
J16
MISO_SPI
SCK_SPI
RST#_P
MOSI_SPI
VTG
J14
RST#
RST#_P
R29 10k
4u7 C25
C20 15pF
C21 15pF
R27
8MHz Y1
J15
AREF
C23 10uF
C26 100nF
U7
ATMEGA1284P-AU
RESET
XTAL2
XTAL1
AREF
VCC
AVCC
(PCINT0/ADC0)PA0
(PCINT1/ADC1)PA1
(PCINT2/ADC2)PA2
(PCINT3/ADC3)PA3
(PCINT4/ADC4)PA4
(PCINT5/ADC5)PA5
(PCINT6/ADC6)PA6
(PCINT7/ADC7)PA7
(PCINT8/T0/XCK)PB0
(PCINT9/CLKO/T1)PB1
(PCINT10/AIN0/INT2)PB2
(PCINT11/AIN1/OC0)PB3
(PCINT12/OC0B/SS)PB4
(PCINT13/MOSI)PB5
(PCINT14/MISO)PB6
(PCINT15/SCK)PB7
(PCINT16/SCL)PC0
(PCINT17/SDA)PC1
(PCINT18/TCK)PC2
(PCINT19/TMS)PC3
(PCINT20/TDO)PC4
(PCINT21/TDI)PC5
(PCINT22/TOSC1)PC6
(PCINT23/TOSC2)PC7
(PCINT24/RXD0)PD0
(PCINT25/TXD0)PD1
(PCINT26/RXD1/INT0)PD2
(PCINT27/TXD1/INT1)PD3
(PCINT28/XCK1/OC1B)PD4
(PCINT294/OC1A)PD5
(PCINT30/OC2B/ICP)PD6
(PCINT31/OC2A)PD7
PA0
PA1
PA2
IO_SWCH
PFO
CAPGD
SYSGD
CAPFLT
CS_CONN_1
CS_FRAM
CS_CONN_2
CS_SDCARD
MOSI_SPI
MISO_SPI
SCK_SPI
SCL_I2C
SDA_I2C
BUSY_LORA
DIO_LORA
RST_LORA
WP_FRAM
LED
RX0
TX0
RX1
TX1
CNT2
INT1
R30 10k
R31 10k
R32 10k
R34 10k
R35 10k
R33 10k
CS_LORA
PB0 –
PB1 – CS_CONN_1
PB2 – CS_FRAM
PB3 – CS_CONN_2
PB4 – CS_SDCARD
PB5 – MOSI_SPI
PB6 – MISO_SPI
PB7 – SCK_SPI
VOLTAGE REFERENCE
U5
ISL21080CIH320Z-TK
Vin
Vout
GND
R28 4k7
U6
LM4041CIM3-1.2(neosazovat)
C24 100nF
Title:
Author:
Size: A4
Page: 3/6
Date:
mlab

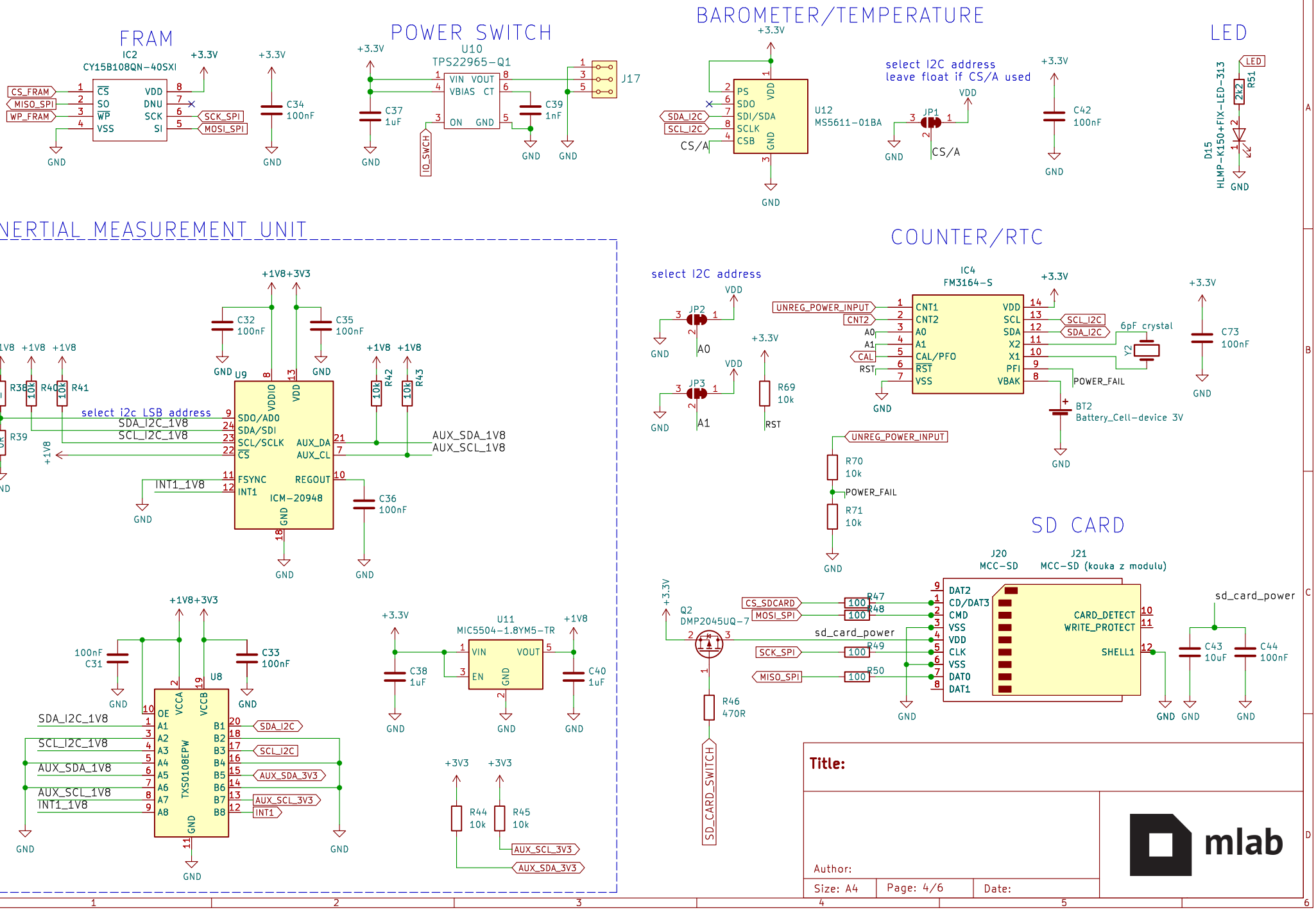
FRAM
IC2
CY15B108QN-40SXI
CS_FRAM
MISO_SPI
WP_FRAM
SCK_SPI
MOSI_SPI
+3.3V
C34
100nF
GND
POWER SWITCH
U10
TPS22965-Q1
VIN VOUT
VBIAS CT
ON GND
C37
1uF
C39
1nF
IO_SWCH
J17
BAROMETER/TEMPERATURE
U12
MS5611-01BA
PS
SDO
SDI/SDA
SCLK
CSB
SDA_I2C
SCL_I2C
CS/A
select I2C address
leave float if CS/A used
JP1
C42
100nF
LED
D15
HLMP-K150+FIX-LED-313
R51
2k2
INERTIAL MEASUREMENT UNIT
U9
ICM-20948
SDO/AD0
SDA/SDI
SCL/SCLK
CS
FSYNC
INT1
AUX_DA
AUX_CL
REGOUT
VDDIO
VDD
C32
100nF
C35
100nF
C36
100nF
R38
R40
R41
R39
R42
R43
select i2c LSB address
SDA_I2C_1V8
SCL_I2C_1V8
INT1_1V8
AUX_SDA_1V8
AUX_SCL_1V8
+1V8
+1V8+3V3
U8
TXS0108EPW
OE
VCCA
VCCB
A1
A2
A3
A4
A5
A6
A7
A8
B1
B2
B3
B4
B5
B6
B7
B8
C31
100nF
C33
100nF
SDA_I2C
SCL_I2C
AUX_SDA_3V3
AUX_SCL_3V3
INT1
U11
MIC5504-1.8YM5-TR
VIN
VOUT
EN
C38
1uF
C40
1uF
R44
10k
R45
10k
+3V3
COUNTER/RTC
IC4
FM3164-S
CNT1
CNT2
A0
A1
CAL/PFO
RST
VSS
VDD
SCL
SDA
X2
X1
PFI
VBAK
UNREG_POWER_INPUT
CNT2
CAL
RST
SCL_I2C
SDA_I2C
6pF crystal
Y2
POWER_FAIL
BT2
Battery_Cell-device 3V
C73
100nF
JP2
JP3
A0
A1
R69
10k
R70
10k
R71
10k
SD CARD
J20
MCC-SD
J21
MCC-SD (kouka z modulu)
DAT2
CD/DAT3
CMD
VSS
VDD
CLK
VSS
DAT0
DAT1
CARD_DETECT
WRITE_PROTECT
SHELL1
CS_SDCARD
MOSI_SPI
SCK_SPI
MISO_SPI
sd_card_power
R47
R48
R49
R50
Q2
DMP2045UQ-7
R46
470R
SD_CARD_SWITCH
C43
10uF
C44
100nF
Title:
Author:
Size: A4
Page: 4/6
Date:
mlab

PIXHAWK STANDARD HEADERS

UART CONN.

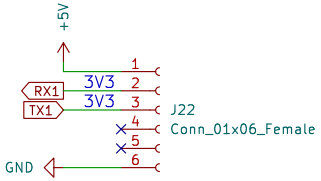

I2C CONN.

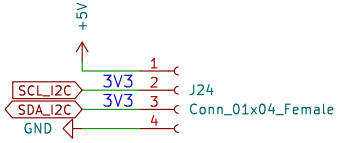

SPI CONN.

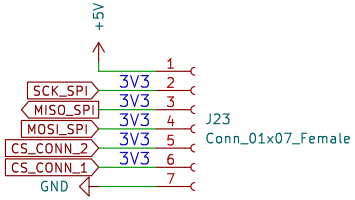

PIN HEADERS

ANALOG CONN

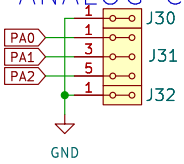

AUX_I2C CONN

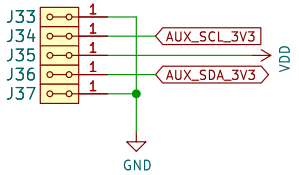

I2C CONN

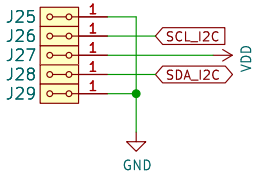

Title:		
Author:		
Size: A4	Page: 5/6	Date:

mlab

SUPERCAP MANAGEMENT

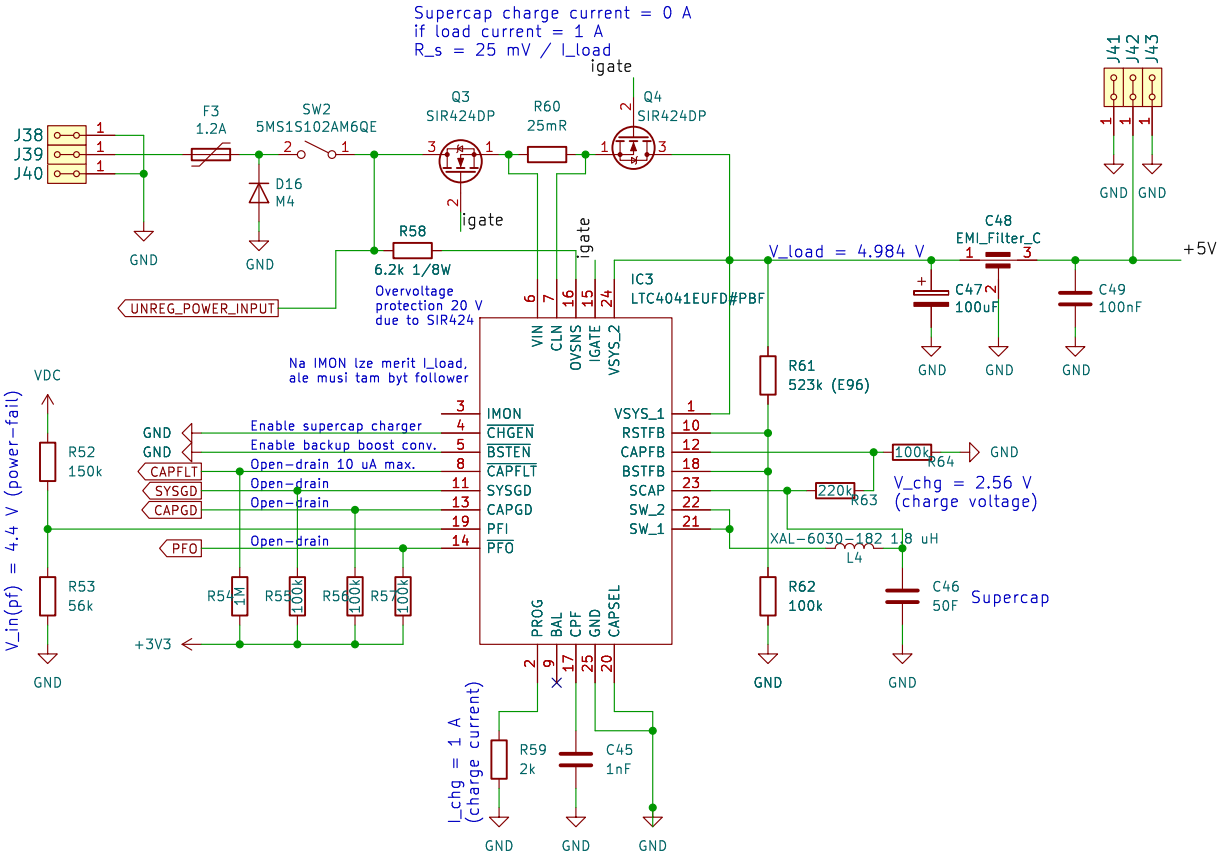

BUCK–BOOST CONVERTOR

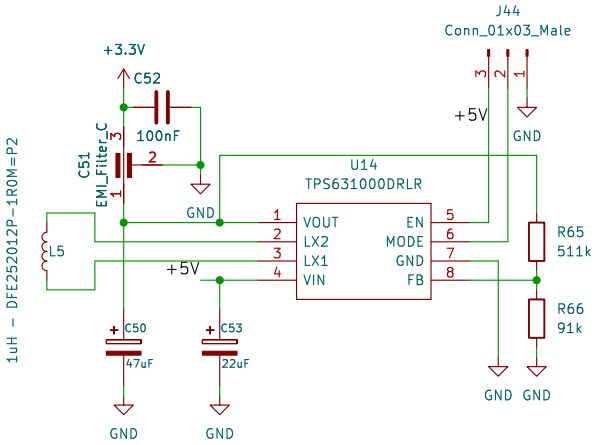

Title:		
Author:		
Size: A4	Page: 6/6	Date:

mlab

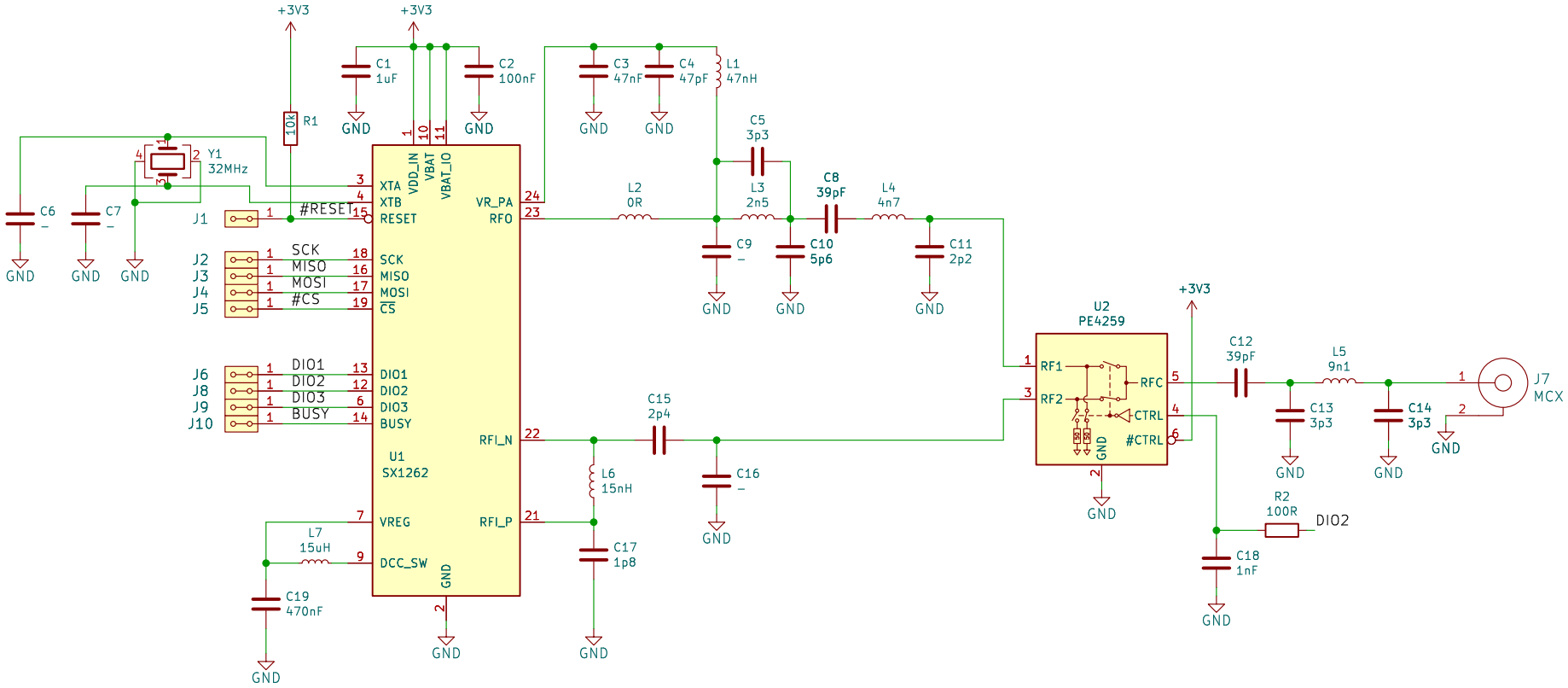

Title:

Author:

Size: A4 | Page: 6/6 | Date:

mlab