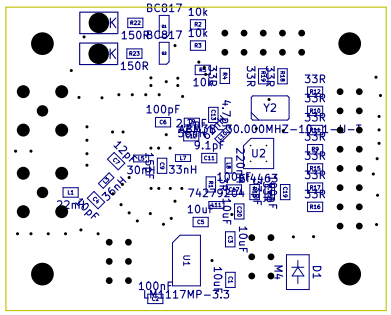
BC817
10k
150R
BC817
10k
150R
33R
33R
33