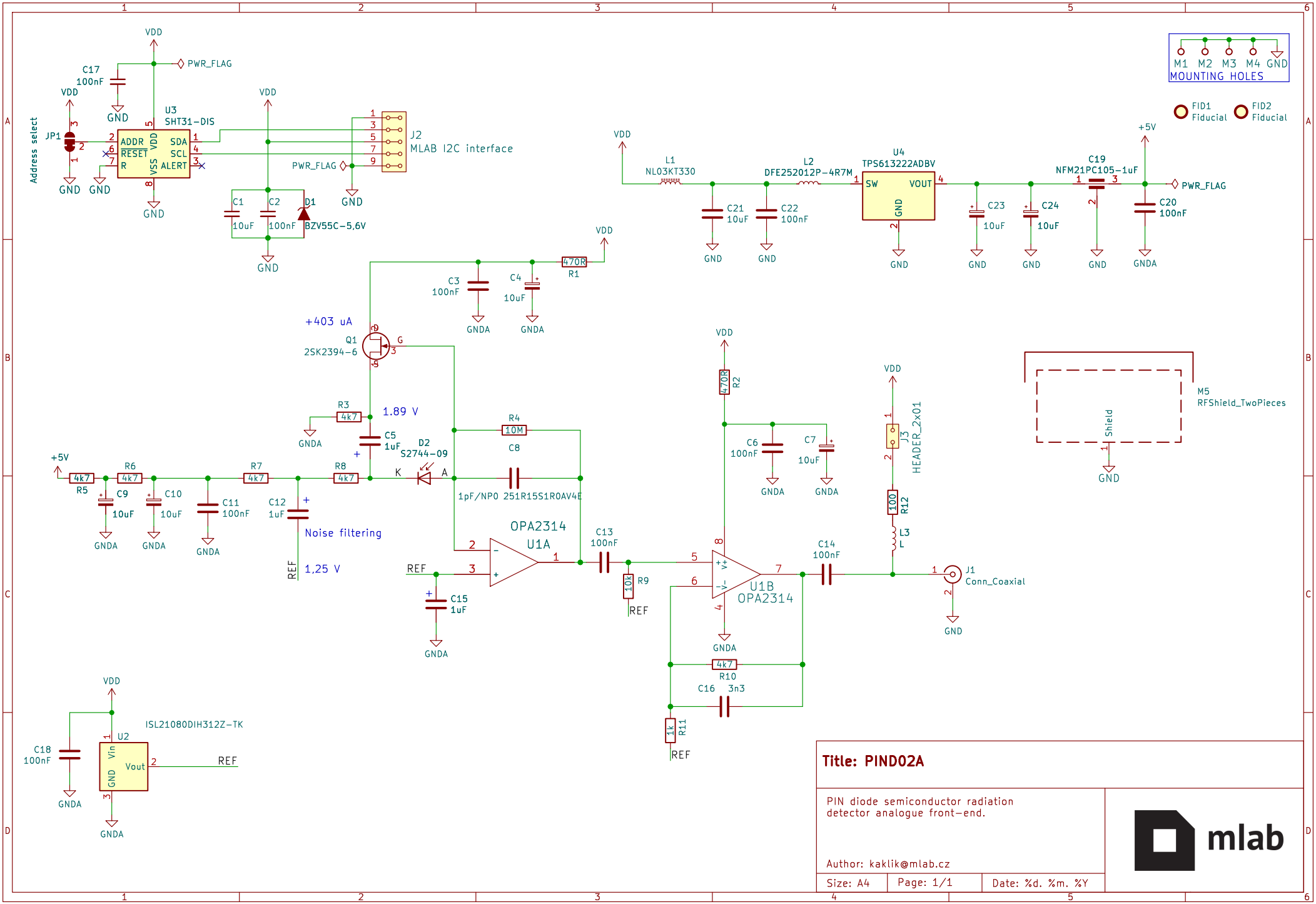
VDD
PWR_FLAG
C17
100nF
GND
U3
SHT31-DIS
JP1
Address select
ADDR
RESET
R
SDA
SCL
ALERT
VDD
VSS
C1
10uF
C2
100nF
D1
BZV55C-5,6V
J2
MLAB I2C interface
M1 M2 M3 M4 GND
MOUNTING HOLES
FID1
Fiducial
FID2
Fiducial
L1
NL03KT330
L2
DFE252012P-4R7M
U4
TPS613222ADBV
SW
VOUT
GND
C21
10uF
C22
100nF
C23
10uF
C24
10uF
C19
NFM21PC105-1uF
C20
100nF
+5V
GNDA
C3
100nF
C4
10uF
470R
R1
+403 uA
Q1
2SK2394-6
R3
4k7
1.89 V
C5
1uF
D2
S2744-09
K
A
R4
10M
C8
1pF/NPO
251R15S1R0AV4E
R5
4k7
R6
4k7
R7
4k7
R8
4k7
C9
10uF
C10
10uF
C11
100nF
C12
1uF
Noise filtering
REF
1,25 V
OPA2314
U1A
C13
100nF
R9
10k
C15
1uF
470R
R2
C6
100nF
C7
10uF
J3
HEADER_2x01
100
R12
L3
L
C14
100nF
U1B
OPA2314
J1
Conn_Coaxial
M5
RFShield_TwoPieces
Shield
4k7
R10
C16
3n3
1k
R11
C18
100nF
U2
ISL21080DIH312Z-TK
Vin
Vout
Title: PIND02A
PIN diode semiconductor radiation detector analogue front-end.
Author: kaklik@mlab.cz
Size: A4
Page: 1/1
Date: %d. %m. %Y
mlab