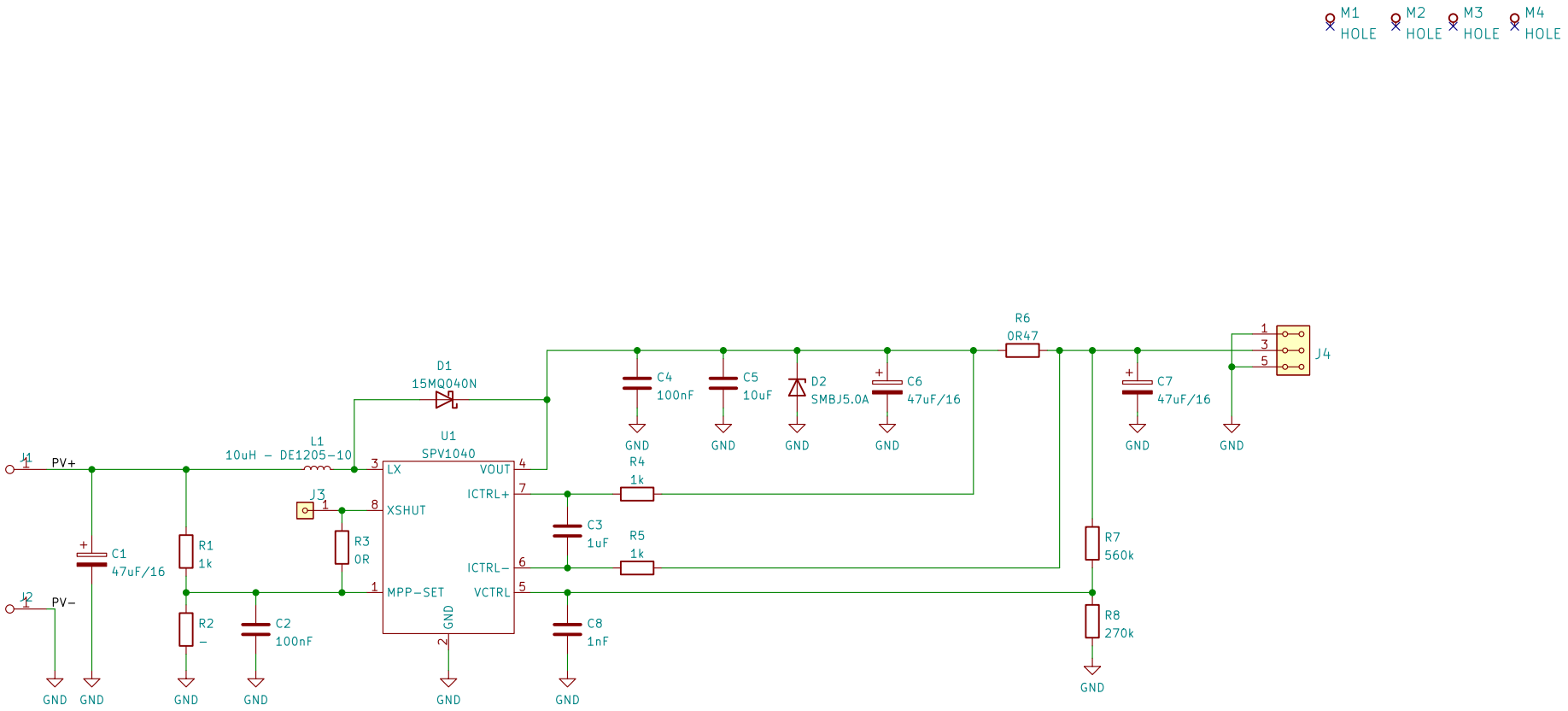

Sheet: /
File: SOLARMINI01B.kicad_sch

Title:

Size: A4	Date:	Rev:
KiCad E.D.A. kicad (5.99.0−13046−g4fe9f01eb0)		Id: 1/1