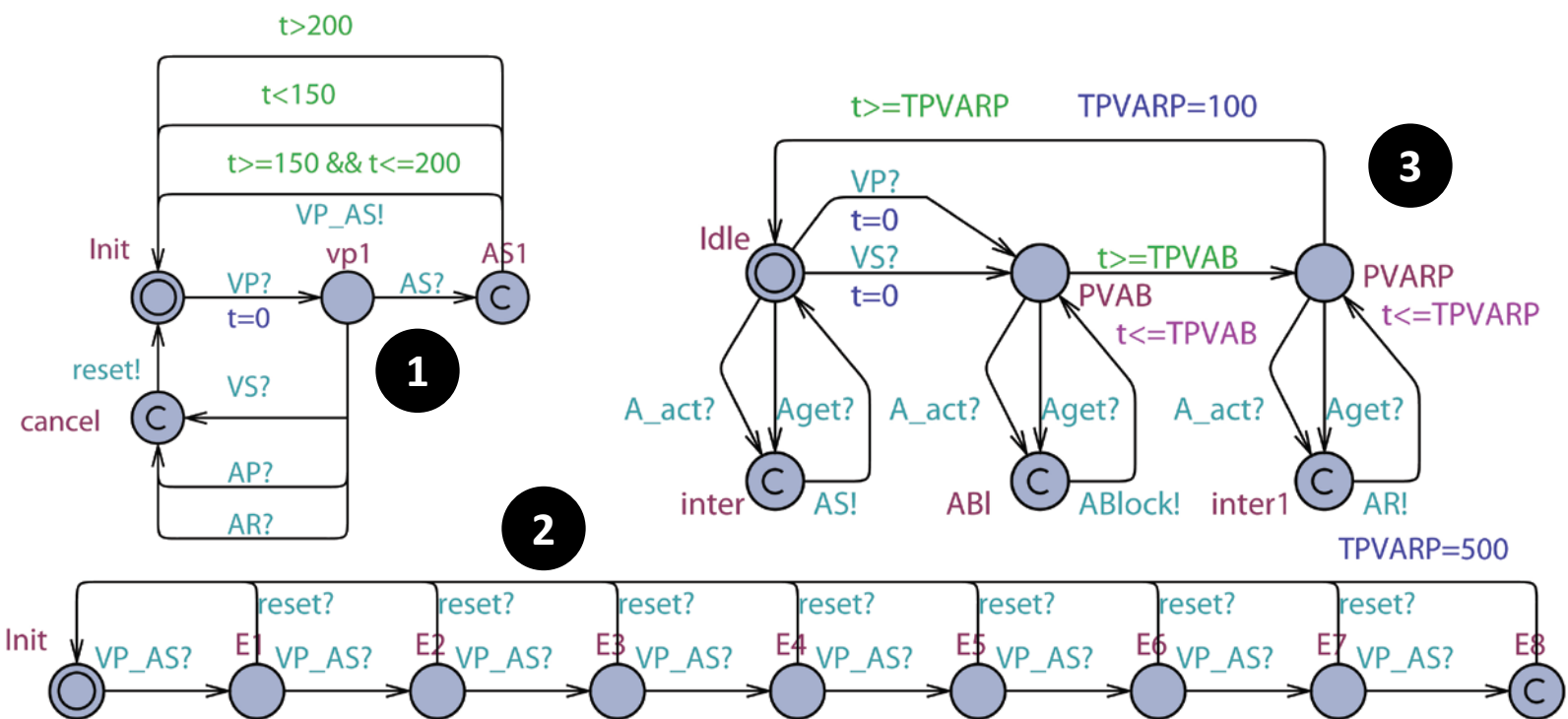
t>200
t<150
t>=150 && t<=200
VP_AS!
Init
vp1
AS1
VP?
t=0
AS?
reset!
VS?
cancel
AP?
AR?
1
t>=TPVARP
TPVARP=100
3
VP?
t=0
VS?
t=0
Idle
t>=TPVAB
PVARP
PVAB
t<=TPVAB
t<=TPVARP
A_act?
Aget?
A_act?
Aget?
A_act?
Aget?
inter
AS!
ABl
ABlock!
inter1
AR!
2
TPVARP=500
Init
VP_AS?
reset?
E1
VP_AS?
E2
VP_AS?
E3
VP_AS?
E4
VP_AS?
E5
VP_AS?
E6
VP_AS?
E7
VP_AS?
E8