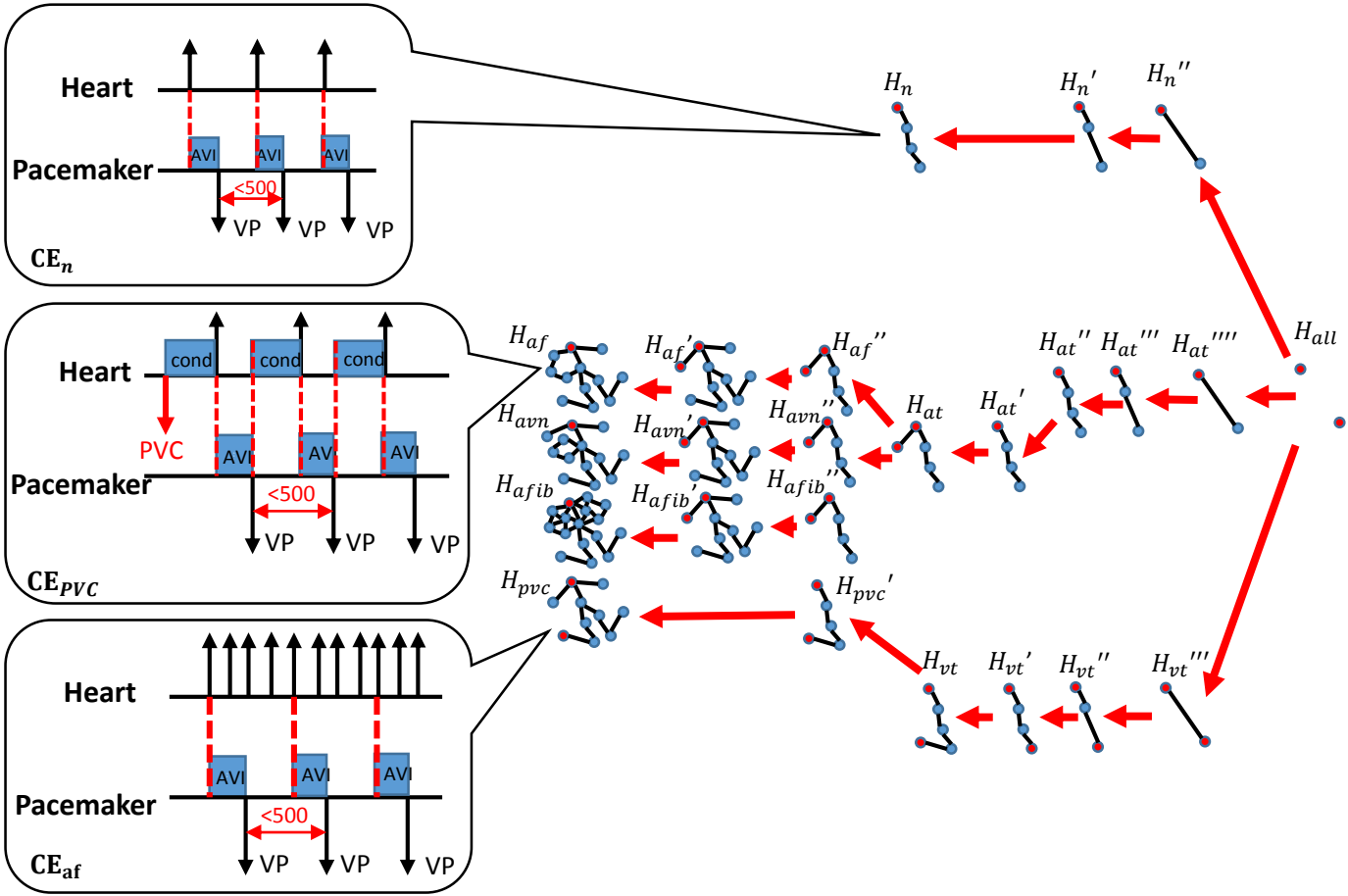
Heart
Pacemaker
AVI
<500
VP
CE_n
cond
PVC
CE_{PVC}
CE_{af}
H_n
H_n'
H_n''
H_{all}
H_{at}''
H_{at}'''
H_{at}''''
H_{at}
H_{at}'
H_{af}
H_{af}'
H_{af}''
H_{avn}
H_{avn}'
H_{avn}''
H_{afib}
H_{afib}'
H_{afib}''
H_{pvc}
H_{pvc}'
H_{vt}
H_{vt}'
H_{vt}''
H_{vt}'''