CliniPharma s.r.o

Infusion set

SOLUCARE RV 180

INFU-PRO

REF I1108FRQDF/180 **CPHF40010CHV-180DF**

Drawing

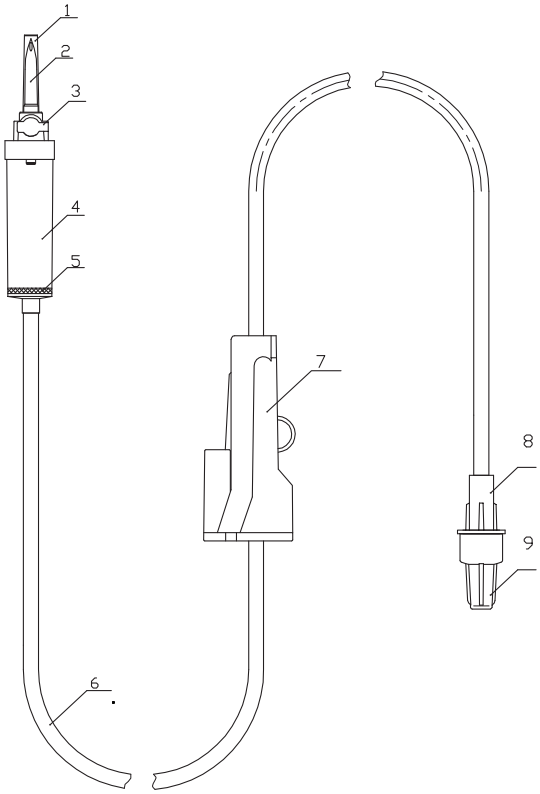

Checkvalve material

Tetrahydrofurane
Silicone, transparent
SAN, transparent
MABS, transparent

Material

01 Protective cap	PE
02 Vented spike	ABS, white
03 Air inlet	PP+PTFE
04 Drip chamber	DEHP FREE Ø16.3x55mm
05 Fluid filter	ABS+PA
06 Tubing	DEHP FREE Ø2.9x4.1mm
07 Roller clamp	ABS transparent/white + blue wheel
08 Checkvalve	
09 Protective cap	PE+PTFE

Layout/Soft blister

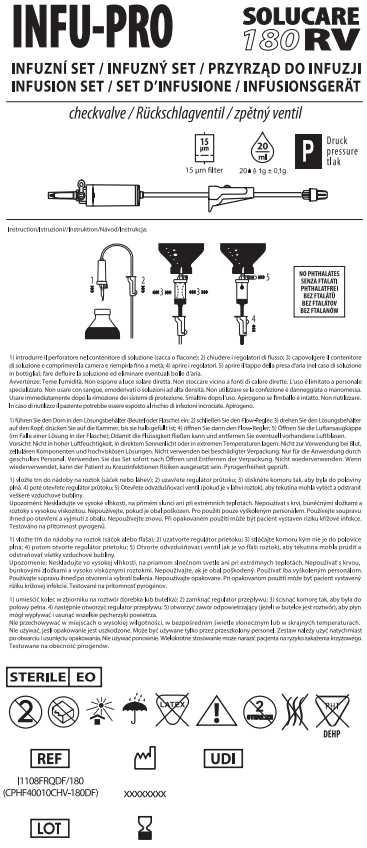

Blister size:
226x99 mm

Printing size:
190x69,5 mm

Printing color:
PANTONE BLACK

Print without frame

Layout/Sticker on carton

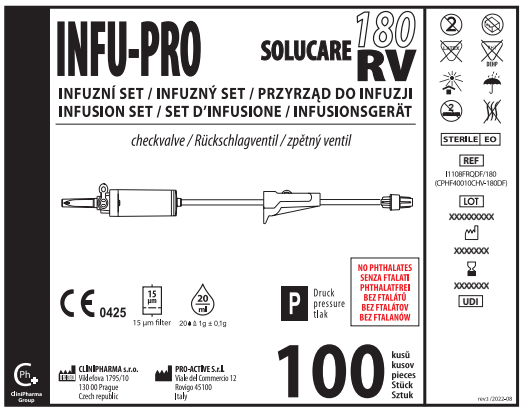

Printing size:
180x140 mm

Printing color:
PANTONE BLACK

2 stickers glued on shipping carton

Packaging

corrugated cardboard, without iron pins, no plastic strips

Size: 430x290x250 mm
Ctn: 100 pcs
Weight ctn: 3 kg

Volume: 0,031175 cbm
Palette: 4.200pcs (42 ctn)
1.2 x 0.8 x 2.0m

UDI-DI Blister: **08034028275593** Carton: **28034028275597**

Sterilization

EO sterilization

Guaranty

5 years

PRODUCTION LIST

CPH-PrL-RV rev.0/08-2022