CANADUINO® LCD 1602 2x16, HD44780 controller, PFC8574 I2C Interface

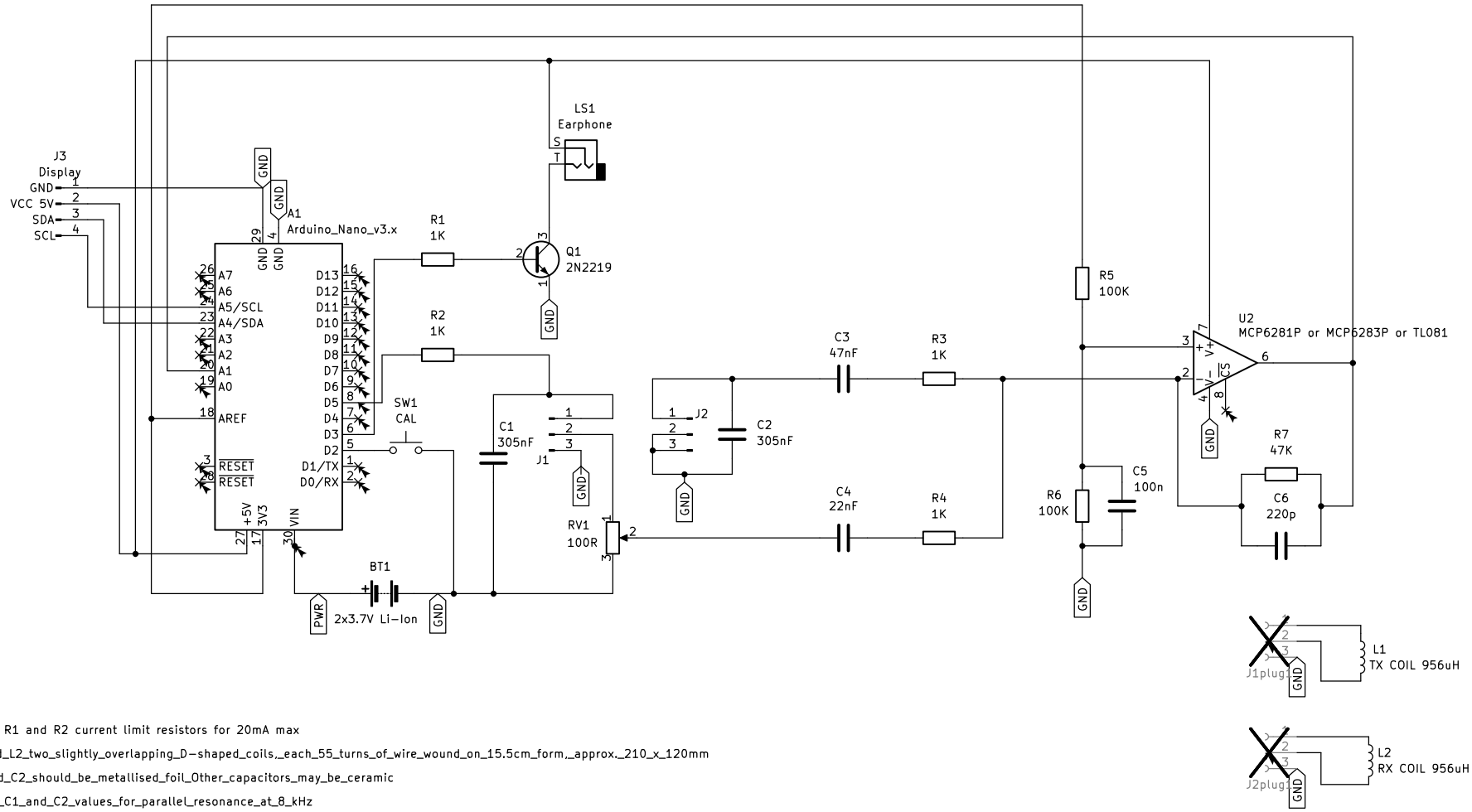

NOTES

- Select R1 and R2 current limit resistors for 20mA max
- L1_and_L2_two_slightly_overlapping_D-shaped_coils,_each_55_turns_of_wire_wound_on_15.5cm_form,_approx._210_x_120mm
- C1_and_C2_should_be_metallised_foil_Other_capacitors_may_be_ceramic
- Select_C1_and_C2_values_for_parallel_resonance_at_8_kHz
- Use_shielded_and_grounded_wire_pairs_to_the_coils
- Connect_the_shield_at_the_coil_end_to_a_Faraday_shield_covering_the_outer_part_of_each_coil_(don't_cover_the_coils_where_they_overlap).
- Shielding_provides_protection_from_electrostatic_fields,_magnetic_fields_are_not_blocked.
- A_2-line_1602_LCD_display_with_HD44780_controller,_adjustable_backlight,_and_an_I2C_add-on_PCB_with_PFC8574_is_used
- C3, R3 network: Z = 1.089K, phase shift -22.94218 deg
- C4, R4 network Z = 1.348K, phase shift -42.12271 deg
- R7, C6 network: 15.3 kHz low-pass filter

Induction Balance Metal Detector

Sheet: /
File: MetalDetector-Mirko-Mike.kicad_sch

Title:

Size: USLetter	Date:	Rev:
KiCad E.D.A. 8.0.8		Id: 1/1