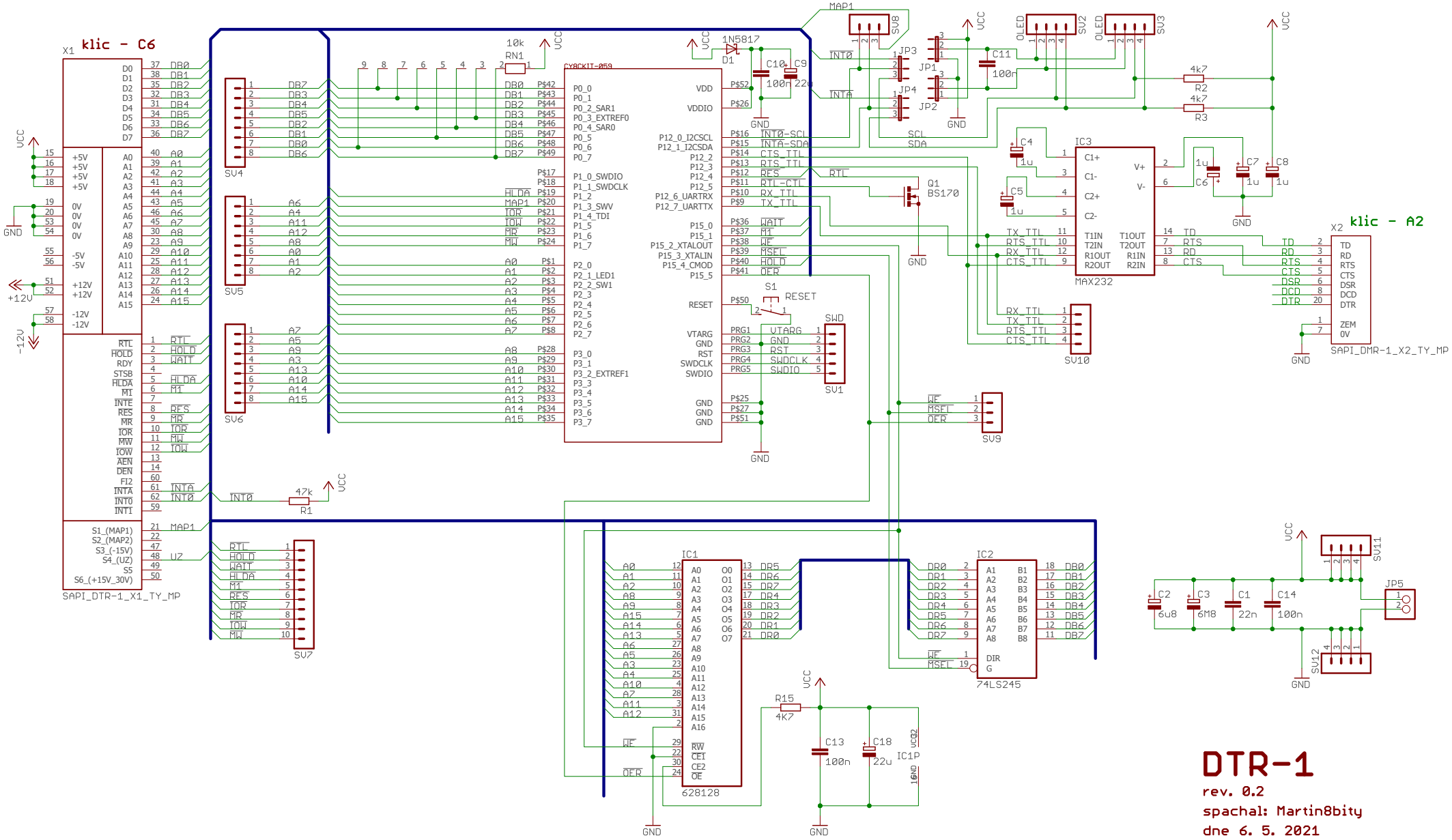
klic - C6
X1
SAPI_DTR-1_X1_TY_MP
CY8CKIT-059
IC1
628128
IC2
74LS245
IC3
MAX232
klic - A2
X2
SAPI_DMR-1_X2_TY_MP
SV4
SV5
SV6
SV7
SV8
SV9
SV10
SV11
SV12
SV1
SWD
S1
RESET
Q1
BS170
D1
1N5817
RN1
10k
R1
47k
R2
4k7
R3
4k7
R15
4K7
C1
22n
C2
6u8
C3
6M8
C14
100n
C13
100n
C18
22u
C10
100n
C9
220
C11
100n
C4
1u
C5
1u
C6
1u
C7
1u
C8
1u
JP1
JP2
JP3
JP4
JP5
MAP1
INT0
INTA
SCL
SDA
RTL
VCC
GND
+12V
-12V
DTR-1
rev. 0.2
spachal: Martin8bity
dne 6. 5. 2021