Lab 5: Flip Flops

Objectives

- To become familiar with flip-flops.
- To implement and observe the operation of different flip-flops.

Apparatus

7400 quad 2-input NAND gates (x2)
7476 dual JK master-slave flip-flops
7474 dual positive edge triggered D flip-flops

Procedure

1. Build the SR latch shown in Fig.1. Q and Q' outputs are connected to LED's of the CADET.

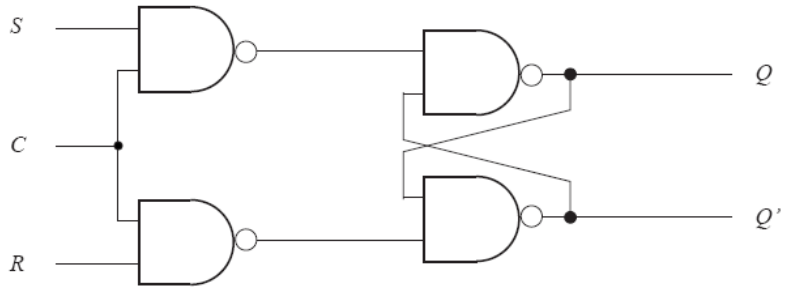

Figure. 1

SR Latch

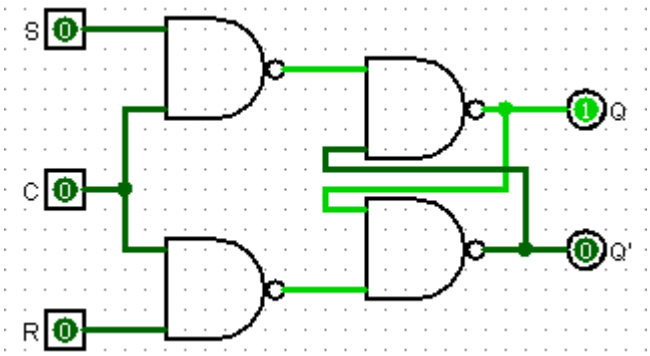

Bkz. 152120221056_1.circ

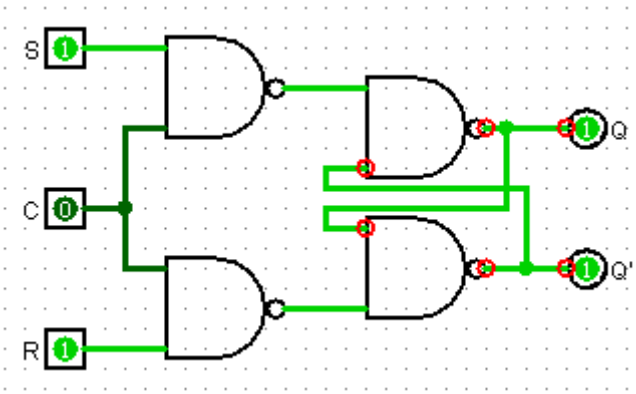

Oscillation Apparent Bkz. 152120221056_1.circ

Verify the truth table of SR latch experimentally.

C	S	R	Q	Q'
1	1	0	1	0
1	0	0	1	0
1	0	1	0	1
0	1	0	1	0
0	0	1	1	0
1	1	0	1	0
1	1	1	1	1
0	0	1	1	0
0	1	1	?	?
1	0	0	1	0

2. Modify the basic RS latch into a D latch by adding the steering gates and the inverter shown in Fig.2. Connect the D input to the pulse generator of the CADET and set it at 1 Hz.

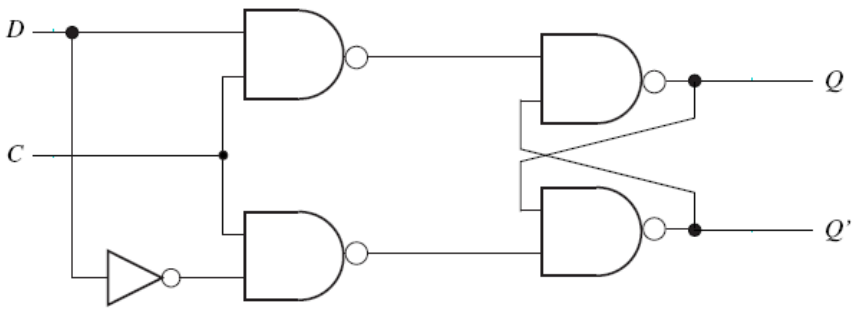

Figure 2.

D Latch

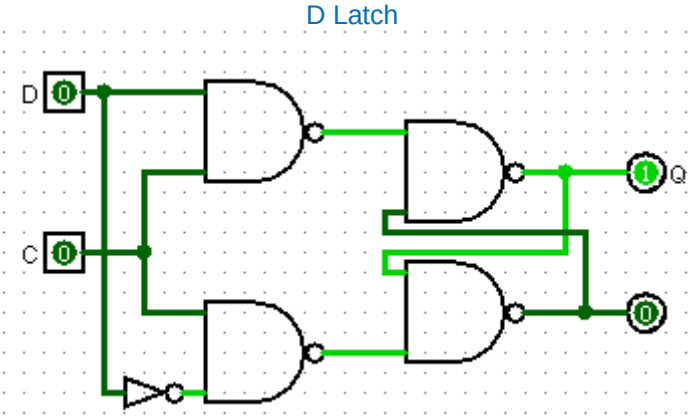

Bkz. 152120221056_2.circ

Obtain the truth table experimentally.

E	D	Q	Q’
1	1	1	0
1	0	0	1
1	1	1	0
0	0	1	0
1	0	0	1
0	1	0	1
1	1	1	0

3. The 7476 is a dual JK master-slave flip-flops with preset and clear inputs. The function table given in Table 1 defines the operation of the flip-flop. The positive transition of the CLOCK (CP) pulse changes the master flip-flop, and the negative transition changes the slave flip-flop as well as the output of the circuit.

Table 1

Input					Output	
Preset	Clear	Clock	J	K	Q	Q’
0	1	X	X	X	1	0
1	0	X	X	X	0	1
0	0	X	X	X	1	1
1	1	↓	0	0	No change	
1	1	↓	0	1	0	1
1	1	↓	1	0	1	0
1	1	↓	1	1	Toggle	

Bu kısımda, 7476 entegresi kullanılarak JK master-slave flip-flop’un çalışma prensibi incelenir. Bu flip-flop türü, clock sinyalinin pozitif kenarında “master” kısmı, negatif kenarında ise “slave” kısmı tetiklenerek kararlı bir çıkış üretir. J ve K girişlerine bağlı olarak Q çıkışı ya set olur (1), reset olur (0), toggle eder (değişir) ya da mevcut durumunu korur. PRE ve CLR girişleri aktif düşük olduğundan, bu pinlere 0 verildiğinde sırasıyla Q çıkışı doğrudan 1 veya 0 yapılabilir. Devre kurularak, saat darbesi altında JK flip-flop’un karakteristiği deneysel olarak gözlemlenir.

Dual JK master-slave flip-flops

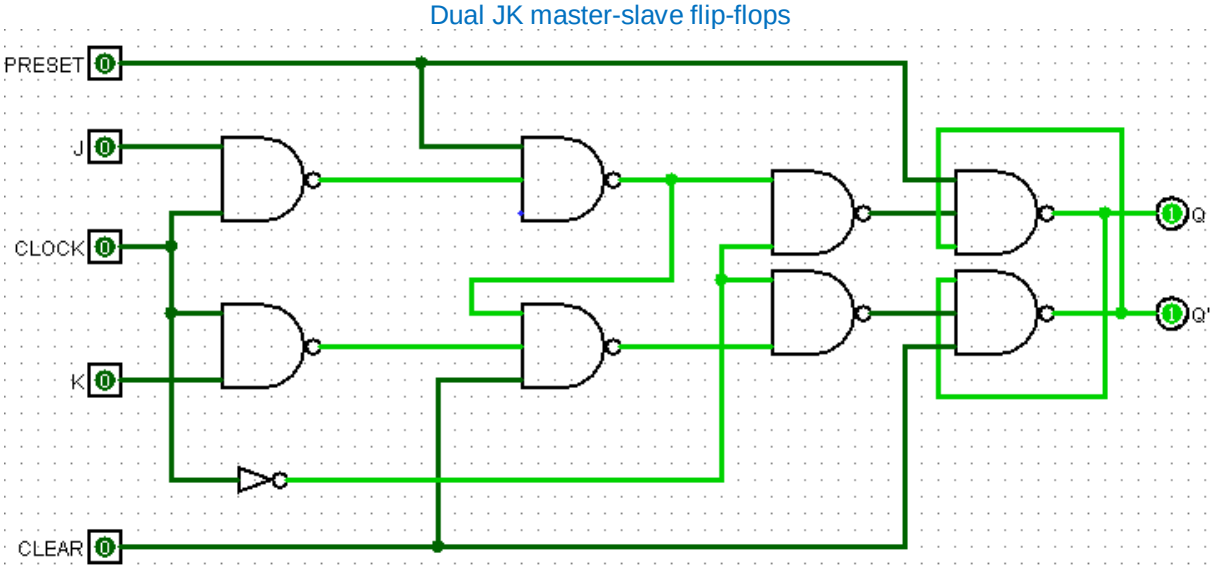

Bkz. 152120221056_3.circ

7476 circuit

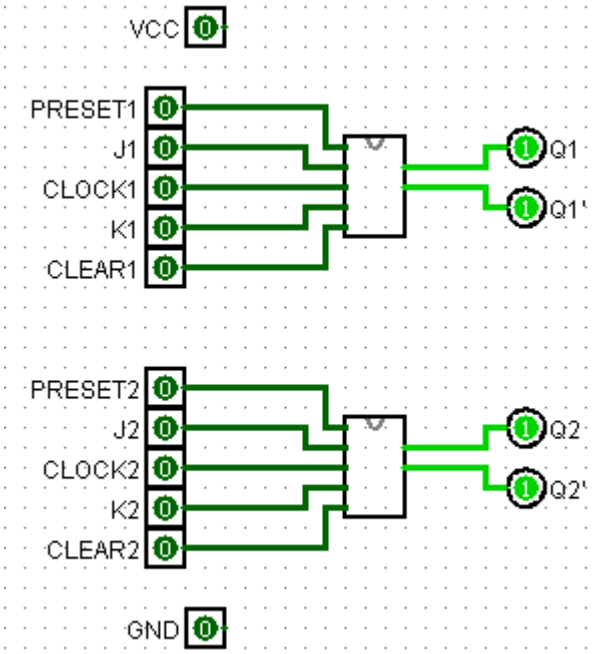

Bkz. 152120221056_3.circ

In the lab, construct the circuit of Fig 3. Connect Q and Q' to the leds on the CADETT. Look at the data sheet for the 7476 and determine the inactive logic required at the PRE and CLR inputs.

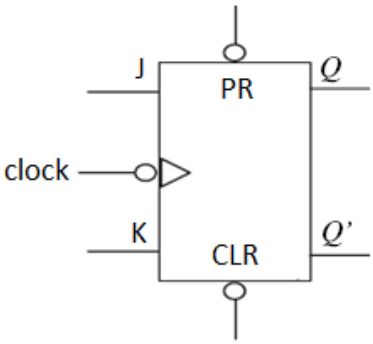

Figure 3.

Connect the 7476 for the SET mode by connecting J = 1, K = 0. With CLOCK (CP) = 0; test the effect of PRE, CLR by putting a 0 on each, one at a time. Verify the operation of the JK flip flop by experimentally obtaining the characteristic.

Circuit of Figure 3.

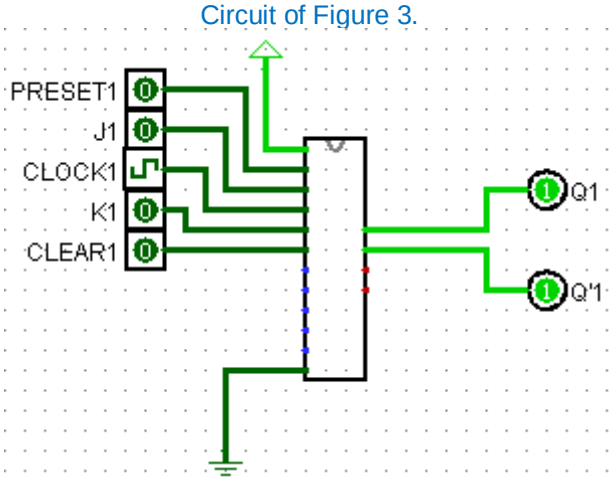

Bkz. 152120221056_3.circ

4. IC 7474 contains two independent positive-edge-triggered D flip-flops with complementary outputs. The information on the D input is accepted by the flip-flops on the positive going edge of the clock pulse. The triggering occurs at a voltage level and is not directly related to the transition time of the rising edge of the clock. The function table given in Table 2 defines the operation of the flip-flop.

Table 2.

Inputs				Outputs	
PR	CLR	CLK	D	Q	$\overline{Q}$
L	H	X	X	H	L
H	L	X	X	L	H
L	L	X	X	H	H
H	H	↑	H	H	L
H	H	↑	L	L	H
H	H	L	X	Q_0	$\overline{Q}_0$

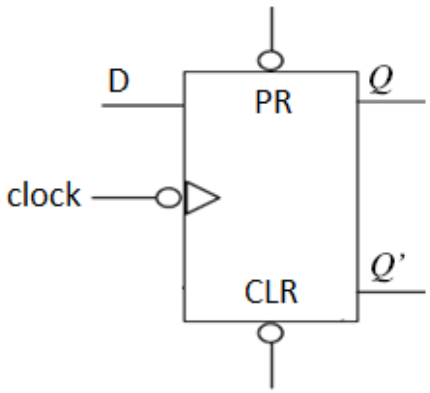

Figure 4.

In the lab, construct the circuit of Fig 4. Connect Q and Q' to the leds on the CADETT. Look at the data sheet for the 7474 and determine the inactive logic required at the PRE and CLR inputs. Verify the operation of the JK flip flop by experimentally obtaining the characteristic.

Bu kısımda, 7474 entegresi ile pozitif kenar tetiklemeli D flip-flop'un çalışma mantığı incelenir. D flip-flop'ta, D girişindeki veri clock sinyalinin yükselen kenarında Q çıkışına kopyalanır, Q' çıkışı ise Q'nun tersidir. Bu flip-flop veri saklamak için kullanılır ve saat darbesiyle veriyi senkron olarak aktarır. PRE ve CLR pinleri aktif düşük olduğundan, sırasıyla çıkışı doğrudan 1 veya 0 yapmak mümkündür. Deneyde devre kurularak D girişinin, clock sinyaliyle birlikte Q çıkışına nasıl yansıtıldığı gözlemlenir.

Two independent positive-edge-triggered D flip-flops

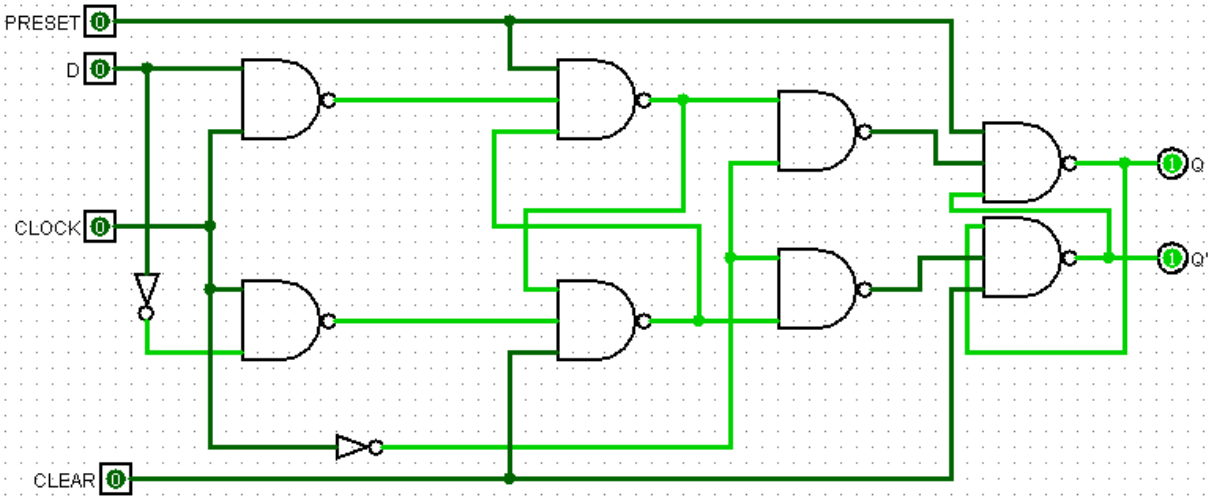

Bkz. 152120221056_4.circ

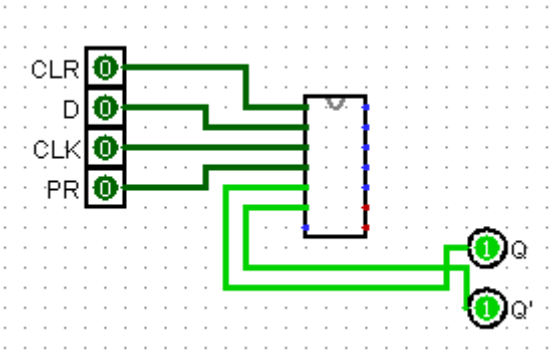

Circuit of Figure 4.
Bkz. 152120221056_4.circ

7474 circuit

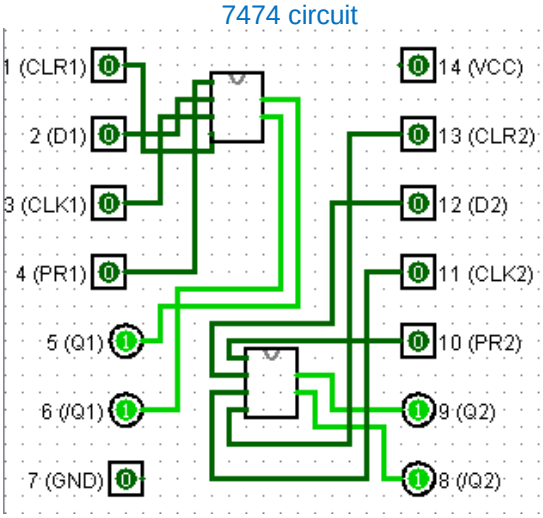

Bkz. 152120221056_4.circ