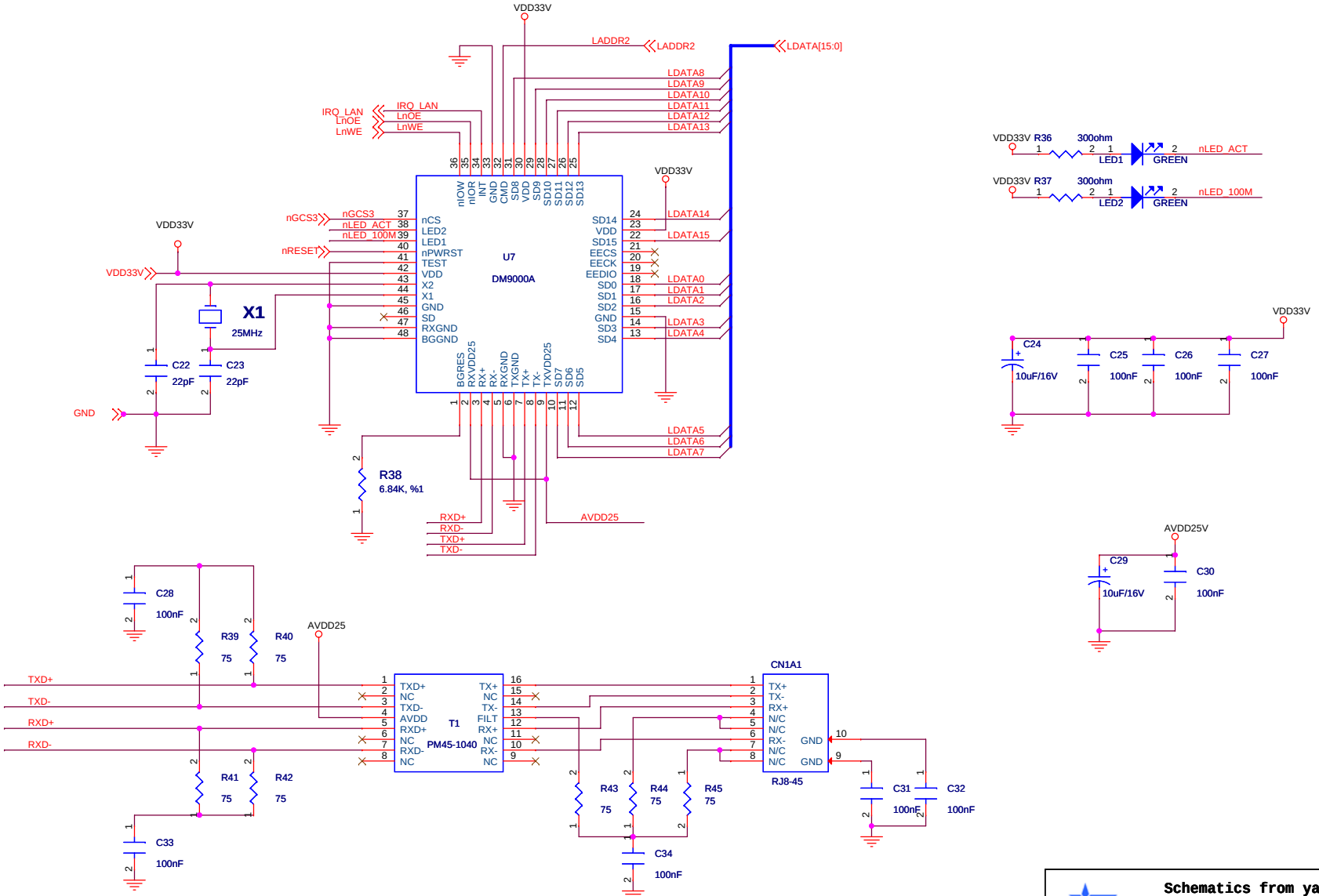

Schematics from yangchu
www.yangchu.com

Title	S3C2440 Base Board		
Size B	Document Number 6		Rev 1.0.0
Date: Friday, February 24, 2012	Sheet 6	of 8	