TYPES OF FERMENTER

Reactors

√ Reactors

• Many different types exist for environmental engineering, generally designed as suspended growth or biofilm reactors

- Suspended growth reactors make use of suspended cells, alsocalled: suspended-floc, dispersed-growth, slurryreactors

- Biofilm reactors make use of cells in biofilms attached on surfaces, alsocalled:fixed-film,attached-growth, immobilizedreactors

√ Engineers must understand

• Kinetics of substrate removal by different types ofmicroorganisms

• Fundamental properties of different reactortypes

Reactors

√ Factors influencing the choice among thedifferent reactortypes:

- Physical & chemical characteristics of the wastewater
- Concentrationsof contaminant
- Presence or absence of oxygen
- Efficiency of treatment and system reliability required
- Climatic conditions under which the reactor will operate
- Number of different biological processes involved in the overall treatment system
- Skills & experience of those who will operate the system
- Relative costs at a given location and time for construction and operation of

different possible reactor configurations

√ The aimsof this chapterare to understand

• How to construct mass balances for different reactors,

• How to use of mass balances to derive basic equations that describe the relationship between reactor size and treatment performance.

Reactor Types

√ Typical reactors used in environmental application

- **Basicreactors**

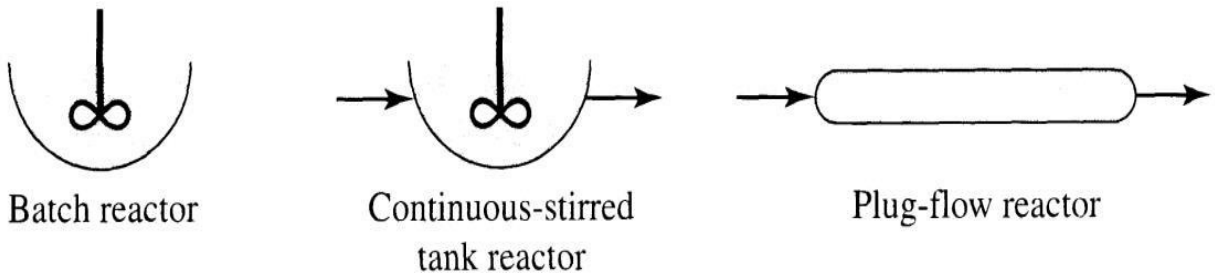

- **Biofilmreactors**

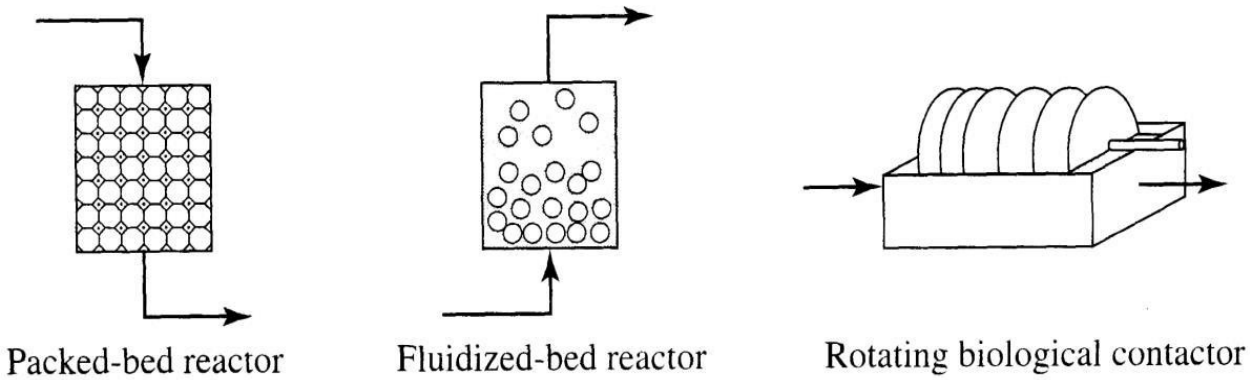

Reactor Types

Table 5.1 Reactor types and their typical uses

Reactor Type	Typical Uses
Basic Reactors	
Batch	BOD test, high removal efficiency of individual wastewater constituents
Continuous-Flow Stirred-Tank (CSTR)	Anaerobic digestion of sludges and concentrated wastes, aerated lagoon treatment of industrial wastes, stabilization ponds for municipal and industrial wastes, part of activated sludge treatment of municipal and industrial wastewaters
Plug-Flow (PFR)	Activated sludge treatment of municipal and industrial wastes, aerated lagoon treatment of industrial wastes, stabilization ponds for municipal and industrial wastes, nitrification, high-efficiency removal of individual wastewater constituents
Biofilm Reactors	
Packed Bed	Aerobic and anaerobic treatment of municipal and industrial wastewaters, organic removal, nitrification, denitrification
Fluidized Bed	Aerobic treatment of low BOD concentration wastewaters, toxic organic biodegradation, anaerobic treatment, denitrification
Rotating Biological Contactor (RBC)	Aerobic treatment of municipal and industrial wastewaters, organic removal, nitrification

Suspended Growth Reactors

√ Batch reactors:

•The simplest suspended-growthreactor

•Biochemical reactions take place without new additionsuntil the reactionis complete.

• Commonly used inlaboratory-scale

• Kinetics of contaminant removal is similar to thatof an ideal plug-flowreactor.

√ Sequencing Batch Reactor (SBR):

• Cyclic operation in a single reactor:

1) Fill, 2) React (aerobic/anoxic oranoxic/aerobic),

3) Settle, 4) Draw, 5)Idle

• SBR can also employ several batch reactors operated inparallel

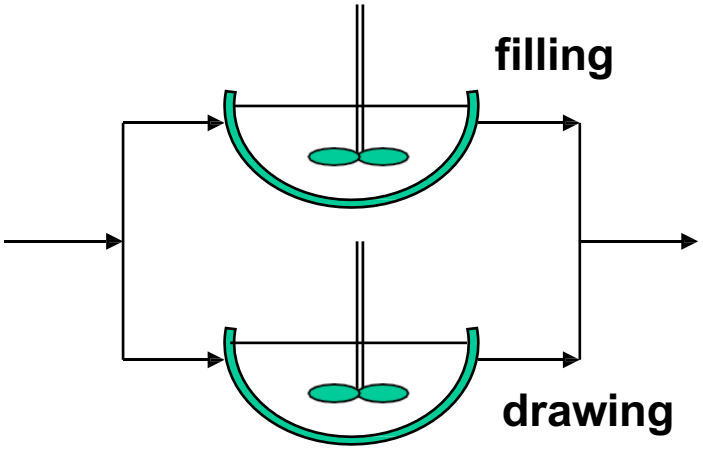

Suspended Growth Reactors

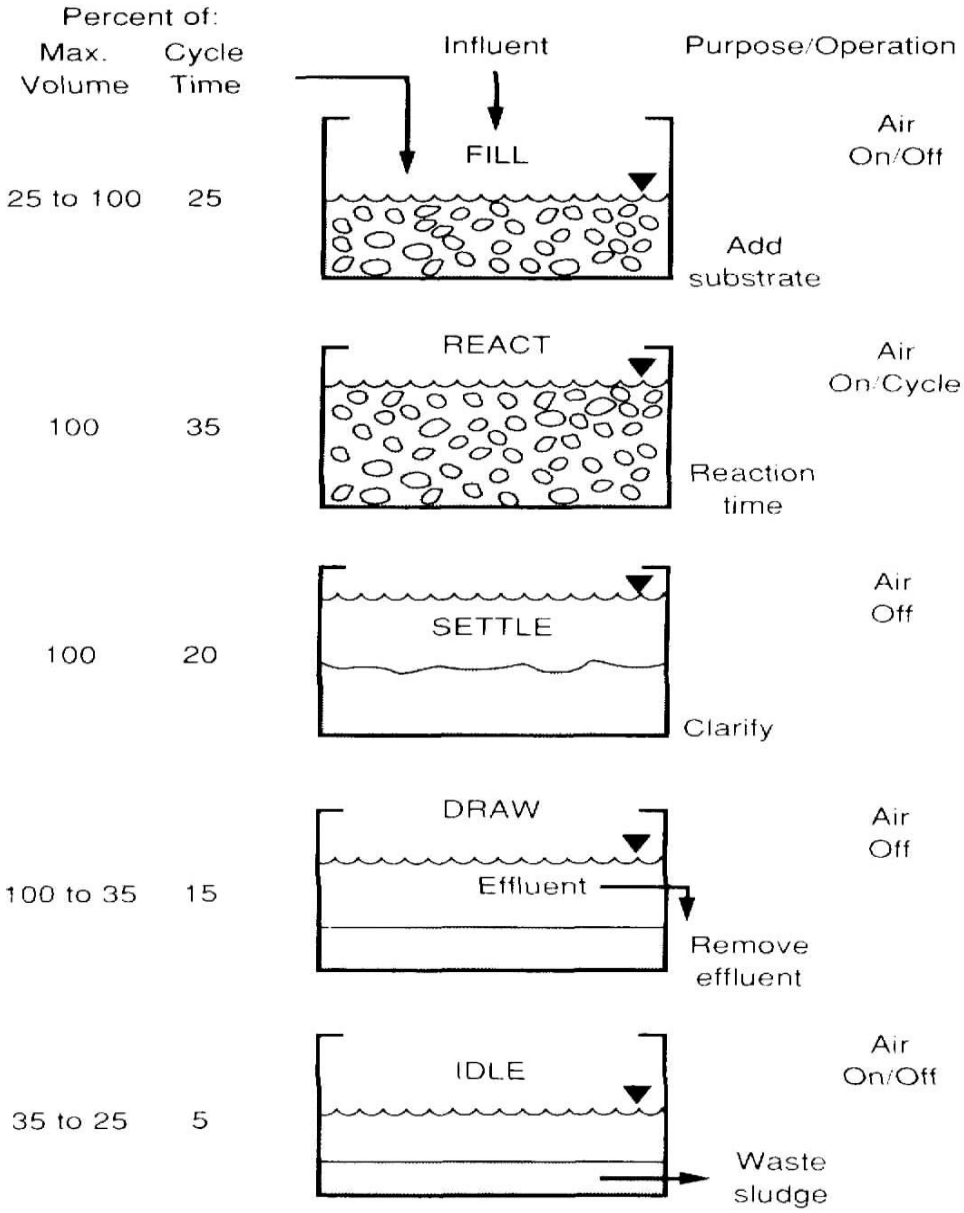

FIGURE 8-21
Typical operating sequence for a sequencing batch reactor [37].

Suspended Growth Reactors

TABLE 8-8
Description of the operational steps for the sequencing batch reactor[a]

Operational step	Description
Fill	The purpose of the fill operation is to add substrate (raw wastewater or primary effluent) to the reactor. The fill process typically allows the liquid level in the reactor to rise from 25 percent of capacity (at the end of idle) to 100 percent. If controlled by time, the fill process normally lasts approximately 25 percent of the full cycle time.
React	The purpose of react is to complete the reactions that were initiated during fill. Typically, react takes up 35 percent of the total cycle time.
Settle	The purpose of settle is to allow solids separation to occur, providing a clarified supernatant to be discharged as effluent. In an SBR, this process is normally much more efficient than in a continuous-flow system because in the settle mode the reactor contents are completely quiescent.
Draw[b]	The purpose of draw is to remove clarified treated water from the reactor. Many types of decant mechanisms are in current use, with the most popular being floating or adjustable weirs. The time dedicated to draw can range from 5 to 30 percent of the total cycle time (15 minutes to 2 hours), with 45 minutes being a typical draw period.
Idle[b]	The purpose of idle in a multitank system is to provide time for one reactor to complete its fill cycle before switching to another unit. Because idle is not a necessary phase, it is sometimes omitted.

[a] Adapted from Ref. 37.

[b] Sludge wasting usually occurs during the settle or idle phases, but wasting can occur in the other phases depending on the mode of operation.

Suspended Growth Reactors

√ Advantages ofSBR:

- Total capital costs are significantly reduced due to the elimination of clarifiers and recirculation facilities.
- Operating flexibility is greatly increased, since the cycle format can be easily modified at any time to offset i)change in process conditions, ii)influent characteristics or iii) effluent objectives.
- Process reliability is greatly improved because the SBR process is not affected by hourly, daily, or seasonal feed variations.
- Since only one vessel is used for all proces operations, plant extension issimplified.
- Better resistance to sludge bulking, since the biomass undergoes cyclic feast-famine conditions, which have been proven to produce better settling sludge than continuous flow.

Suspended Growth Reactors

√ Continuous-Flow Stirred-TankReactor(CSTR), or completely mixed reactor:

- Used to culture organisms or to study basic biochemical phenomenainthe laboratory (**Chemostat**)
- Liquid or slurry stream is continuously introduced, and liquid contents arecontinuously removed from the reactor
- Concentrationsof substrates and microorganisms are the same everywhere throughout thereactor (**Ideal CSTR**); it makes analysis of CSTR comparativelysimple.

√ Plug-Flow Reactor (PFR)

- Sometimes referred to tubular reactor or piston-flowreactor.
- Intheideal PFR,theflow movesthroughthereactorwith nomixing with earlier or later enteringflows.
- Hence if one knows the flow rate to the reactor and itssize, the location of the element at any time can becalculated.
- Unlike the CSTR, the concentartions of substrates and microorganismsvary throughout thereactor.
- An ideal PFR is difficult to realize in practice, because mixing in thedirection of flow is impossible to prevent.

Bioreactor Design

Bioreactor Design

- Bioreactors have requirements that add complexity compared to simpler chemical reactors
  - Usually three-phase (cells, water, air)
  - Need sterile operation
  - Often need heat removal at ambient conditions
- But biological reaction systems have many advantages
  - Some products can only be made by biological routes
  - Large molecules such as proteins can be made
  - Selectivity for desired product can be very high
  - Products are often very valuable (e.g. Active Pharmaceutical Ingredients: APIs)
  - Selective conversion of biomass to chemicals
  - Well established for food and beverage processes

Bioreactor Design

- **Enzyme catalysis**
- Cell growth and metabolism
- Cleaning and sterilization
- Stirred tank fermenter design
- Other bioreactors

Enzyme catalysis

- Enzymes are biocatalysts and can sometimes be isolated from host cells
  - Low cost enzymes are used once through: amylase, ligninase
  - High cost enzymes are immobilized for re-use
- Enzymes are usually proteins
  - Most are thermally unstable and lose structure above ~60ºC
  - Usually active only in water, often over restricted range of pH, ionic strength
- Enzyme kinetics: Michaelis-Menten equation:

$$R = \frac{\alpha C}{\beta + C}$$

R = reaction rate
C = substrate concentration
α, β = constants

Enzyme Catalysis: Immobilization

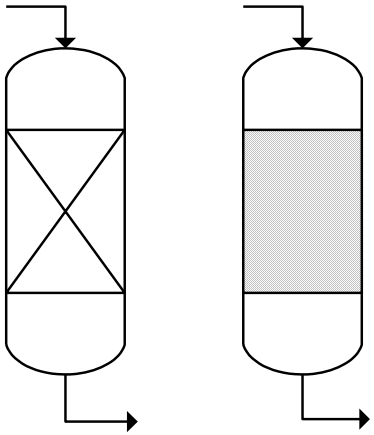

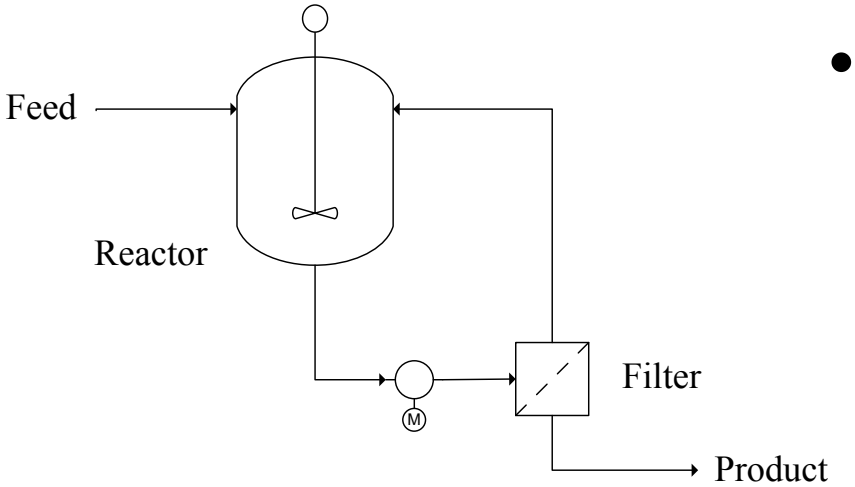

- Enzymes can sometimes be adsorbed onto a solid or encapsulated in a gel without losing structure. They can then be used in a conventional fixed-bed reactor
- If the enzyme is larger than the product molecule, it can be contained in the reactor using ultrafiltration or nanofiltration

Bioreactor Design

- Enzyme catalysis
- **Cell growth and metabolism**
- Cleaning and sterilization
- Stirred tank fermenter design
- Other bioreactors

Cell Growth

- Cell growth rate can be limited by many factors
  - Availability of primary substrate
    - Typically glucose, fructose, sucrose or other carbohydrate
  - Availability of other metabolites
    - Vitamins, minerals, hormones, enzyme cofactors
  - Availability of oxygen
    - Hence mass transfer properties of reaction system
  - Inhibition or poisoning by products or byproducts
    - E.g. butanol fermentation typically limited to a few % due to toxicity
  - High temperature caused by inadequate heat removal
    - Hence heat transfer properties of reaction system
- All of these factors are exacerbated at higher cell concentrations

Cell Growth and Product Formation in Batch Fermentation

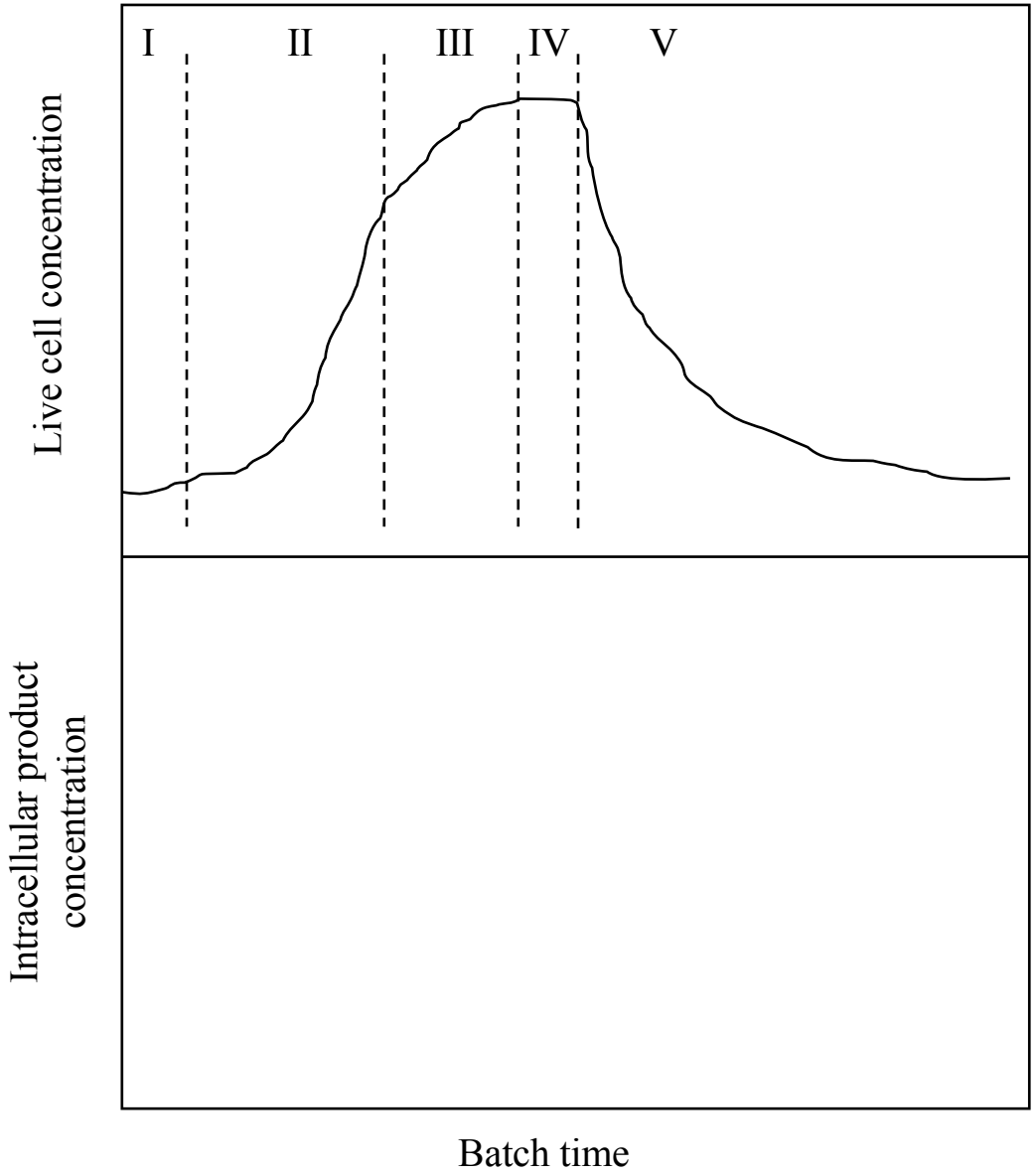

Cell growth goes through several phases during a batch

- I Innoculation: slow growth while cells adapt to new environment
- II Exponential growth: growth rate proportional to cell mass
- III Slow growth as substrate or other factors begin to limit rate
- IV Stationary phase: cell growth rate and death rate are equal
- V Decline phase: cells die or sporulate, often caused by product build-up

Cell Growth and Product Formation in Batch Fermentation

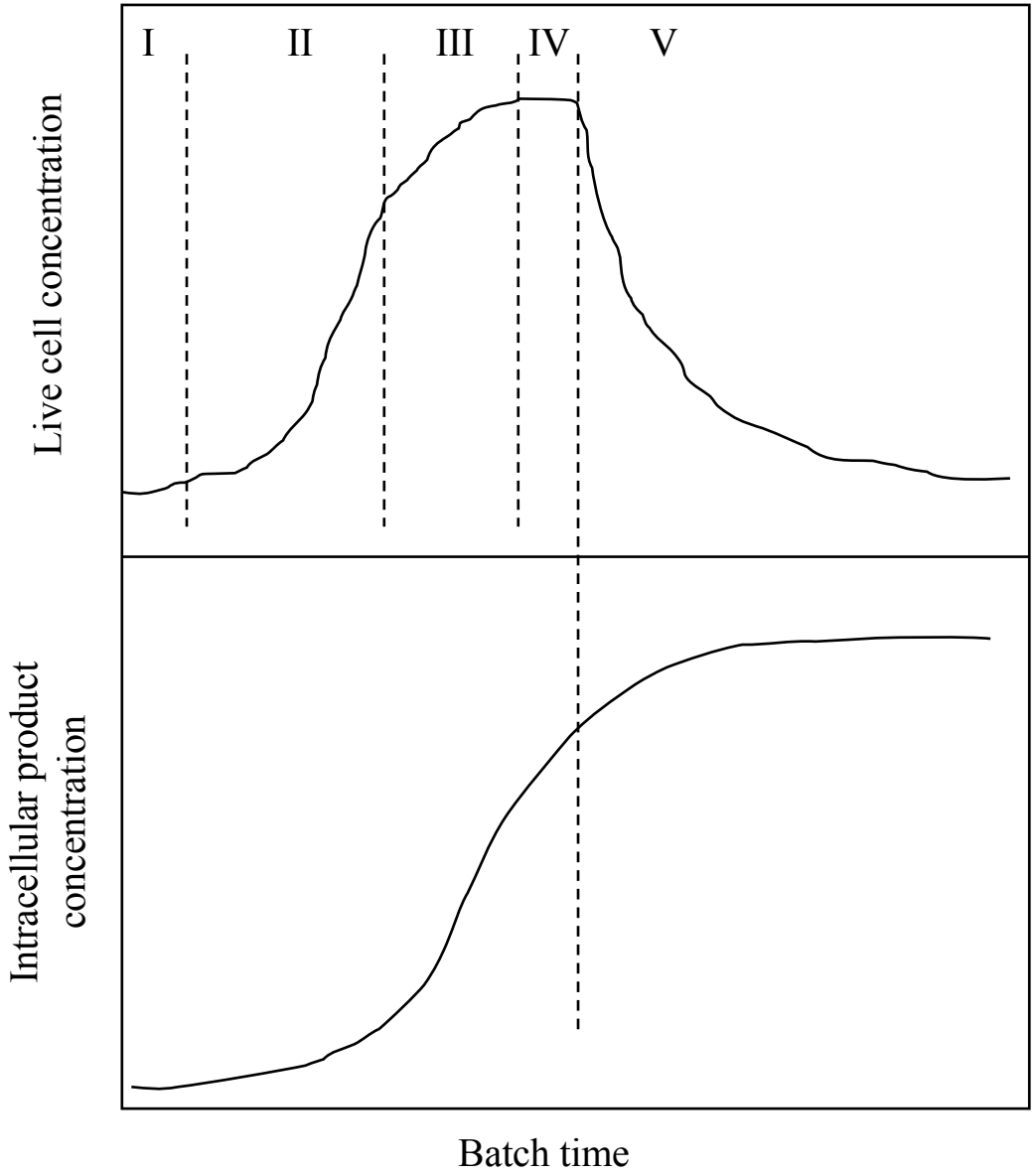

- Intracellular product accumulation is slow at first (not many cells)
- Product accumulation continues even after live cell count falls (dead cells still contain product)

Cell Growth Kinetics

- Cell growth rate defined by:

$$\frac{\mathrm{d}x}{\mathrm{d}t} = \mu_g \; x$$

x = concentration of cells, g/l
t = time, s
μ_g = growth rate, s^{-1}

- Cell growth rate usually has similar dependence on substrate concentration to Michaelis-Menten equation: Monod equation:

$$\mu_g = \frac{\mu_{\max} \; s}{K_s + s}$$

s = concentration of substrate, g/l
K_s = constant
μ_{max} = maximum growth rate, s^{-1}

- Substrate consumption must allow for cell maintenance as well as growth

$$\frac{\mathrm{d}s_i}{\mathrm{d}t} = \left(m_i + \frac{\mu_g}{Y_i} \right) x$$

m_i = rate of consumption of substrate i to maintain cell life, g of substrate/g cells.s
Y_i = yield of new cells on substrate i, g of cells/g substrate

Metabolism and Product Formation

- Product formation rate in biological processes is often not closely tied to rate of consumption of substrate
  - Product may be made by cells at relatively low concentrations
  - Cell metabolic processes may not be involved in product formation
- It is usually not straightforward to write a stoichiometric equation linking product to substrate
- Instead, product formation and substrate consumption are linked through dependence of both on live cell mass in reactor:

$$\frac{\mathrm{d}\,p_i}{\mathrm{d}\,t} = k_i\,x$$

p_i = concentration of product i, g/l
k_i = rate of production of product I per unit mass of cells

Exercise: Where Should We Operate?

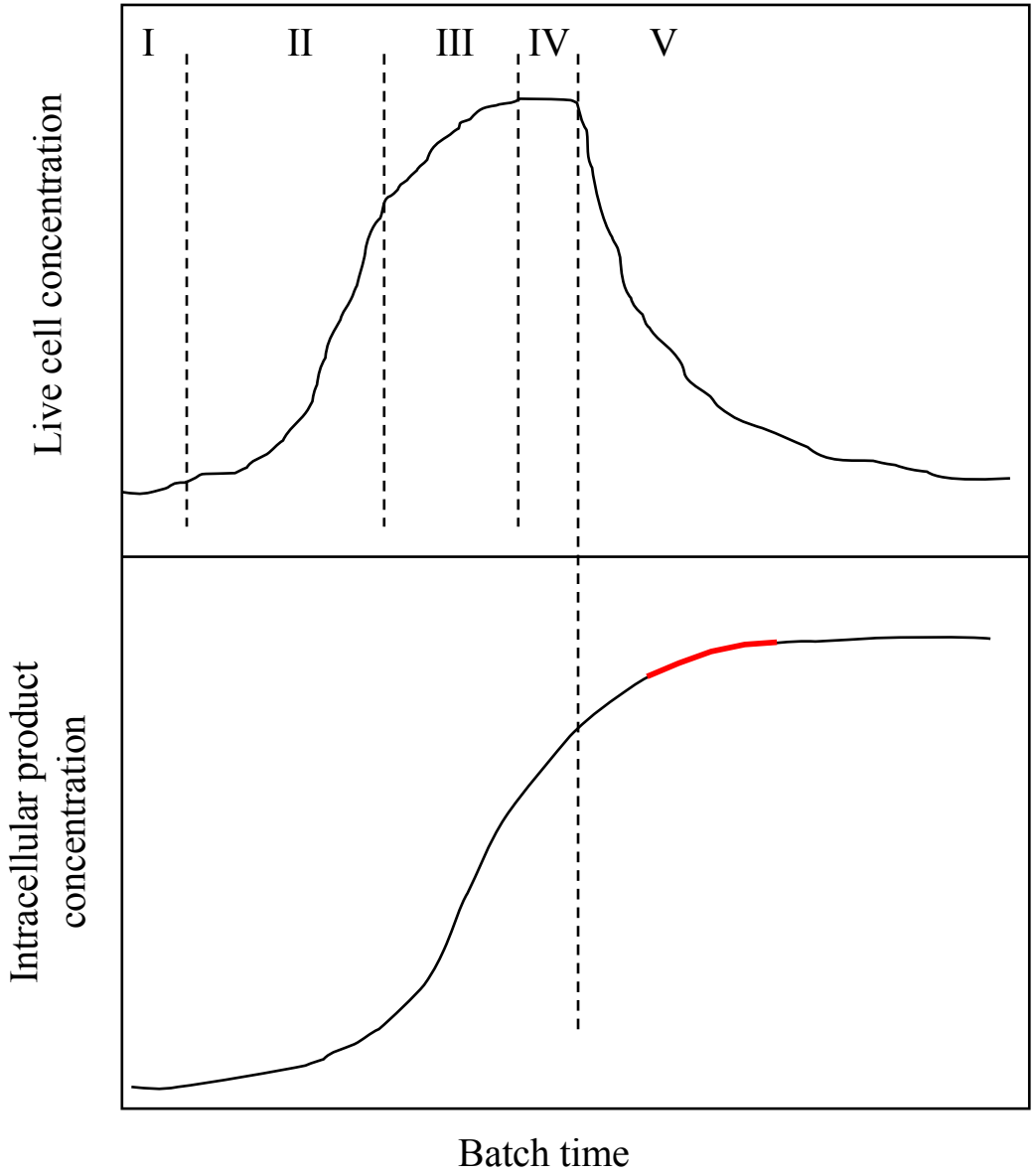

- Intracellular product, batch process
- Batch operation should continue into Phase V to maximize the product assay (increase reactor productivity)
- Probably not economical to go to absolute highest product concentration

Exercise: Where Should We Operate?

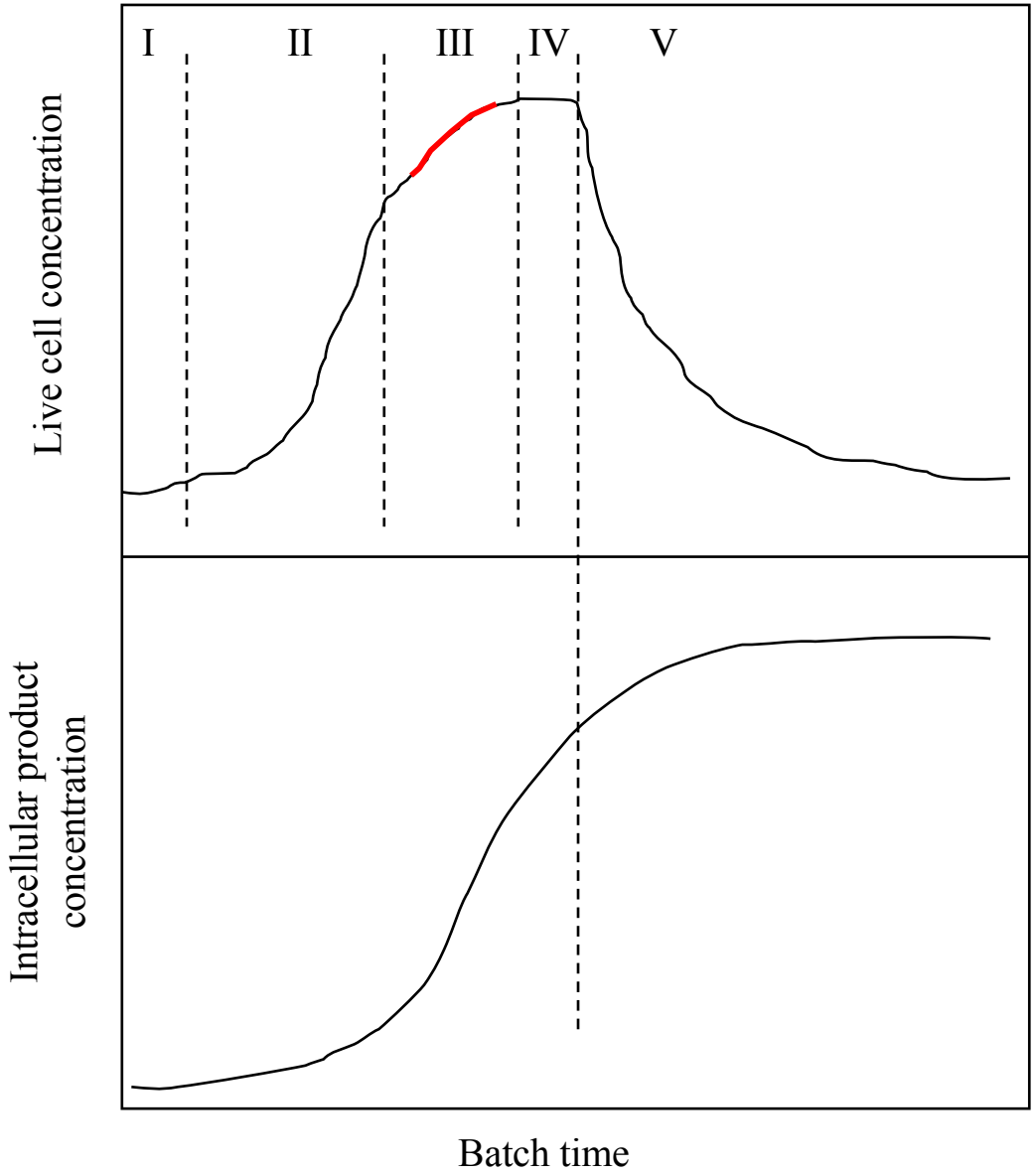

- Intracellular product, continuous process
- If the product is harvested from the cells then we need a high rate of production of cells and would operate toward the upper end of phase III

Exercise: Where Should We Operate?

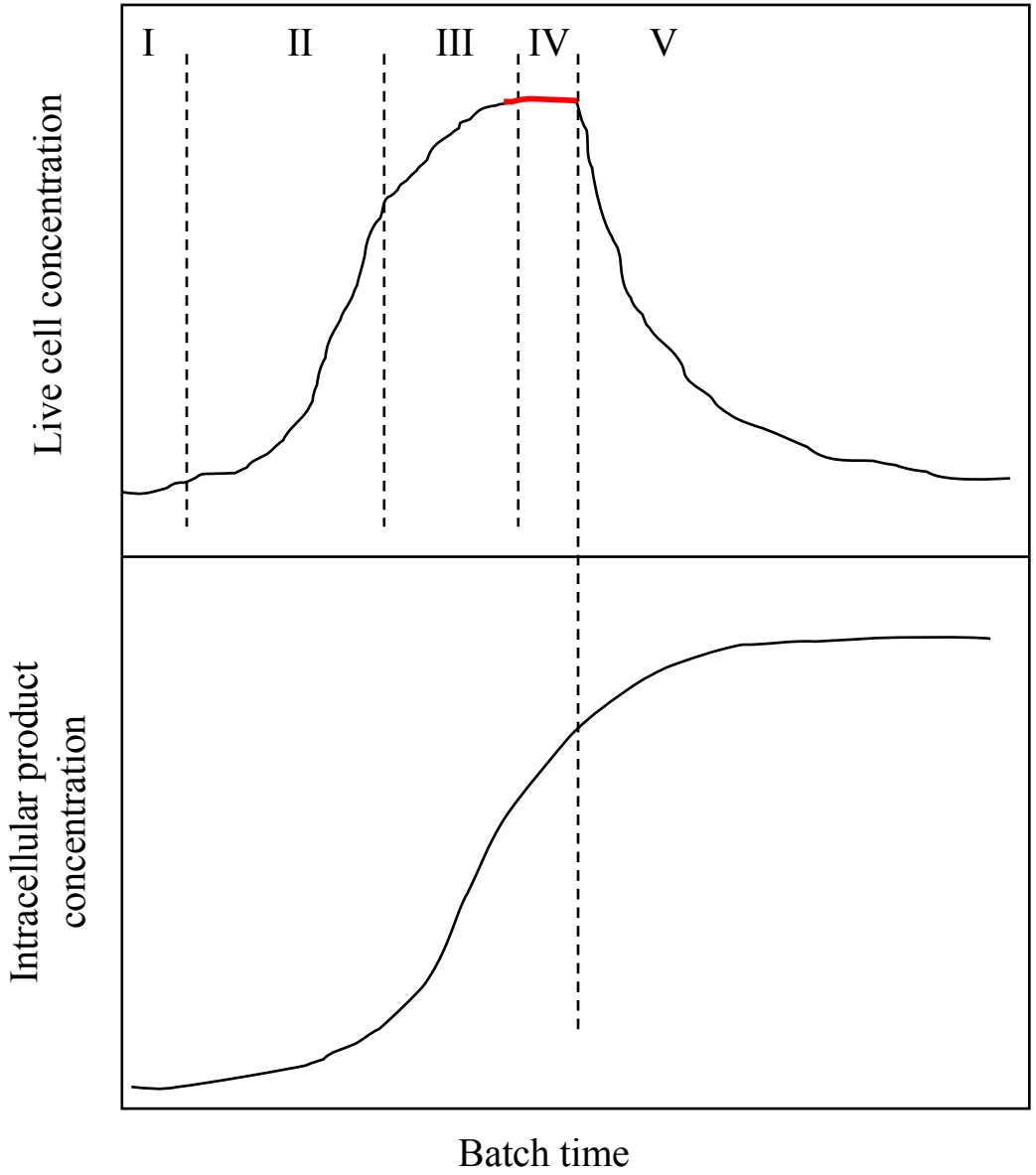

- Extracellular product, continuous process
- If the product can be recovered continuously or cells can be recycled then we can maintain highest productivity by operating in Phase IV

Bioreactor Design

- Enzyme catalysis
- Cell growth and metabolism
- **Cleaning and sterilization**
- Stirred tank fermenter design
- Other bioreactors

Cleaning and Sterilization

- Biological processes must maintain sterile (aseptic) operation:
  - Prevent infection of desired organism with invasive species
  - Prevent invasion of natural strains that interbreed with desired organism and cause loss of desired strain properties
  - Prevent contamination of product with byproducts formed by invasive species
  - Prevent competition for substrate between desired organism and invasive species
  - Ensure quality and safety of food and pharmaceutical grade products
- Design must allow for cleaning and sterilization between batches or runs
  - Production plants are usually designed for cleaning in place (CIP) and sterilization in place (SIP)
- Continuous or fed-batch plants must have sterile feeds
  - Applies to all feeds that could support life forms, particularly growth media
  - Including air: use high efficiency particulate air (HEPA) filters

Design for Cleaning and Sterilization

- Reactors and tanks are fitted with special spray nozzles for cleaning. See www.Bete.com for examples

- Minimize dead-legs, branches, crevices and other hard-to-clean areas
- Minimize process fluid exposure to shaft seals on pumps, valves, instruments, etc. to prevent contaminant ingress
- Operate under pressure to prevent air leakage in (unless biohazard is high)

Cleaning Policy

- Typically multiple steps to cleaning cycle:
  - Wash with high-pressure water jets
  - Drain
  - Wash with alkaline cleaning solution (typically 1M NaOH)
  - Drain
  - Rinse with tap water
  - Drain
  - Wash with acidic cleaning solution (typically 1M phosphoric or nitric acid)
  - Drain
  - Rinse with tap water
  - Drain
  - Rinse with deionized water
  - Drain
- Each wash step will be timed to ensure vessel is filled well above normal fill line

Sterilization Policy

- Sterilization is also a reaction process: cell death is typically a 0th or 1st order process, but since we require a high likelihood that all cells are killed, it is usually treated probabilistically
- Typical treatments: 15 min at 120ºC or 3 min at 135ºC
- SIP is usually carried out by feeding steam and holding for prescribed time. During cool-down only sterile air should be admitted
- Feed sterilization can be challenging for thermally sensitive feeds such as vitamins – need to provide some additional feed to allow for degradation

Continuous Feed Sterilization

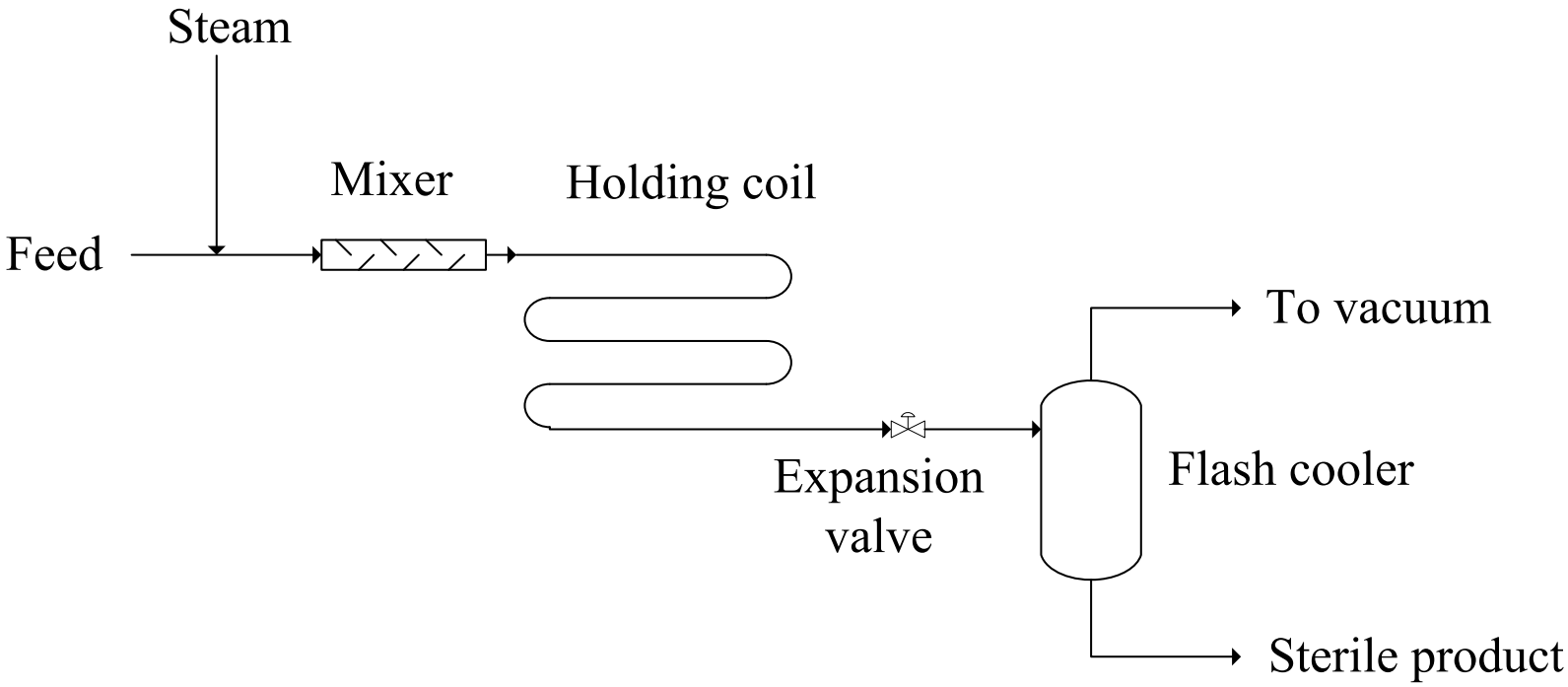

- Holding coil must have sufficient residence time at high temperature
- Expansion valve shaft is potential contamination source

Heat Exchange Feed Sterilization

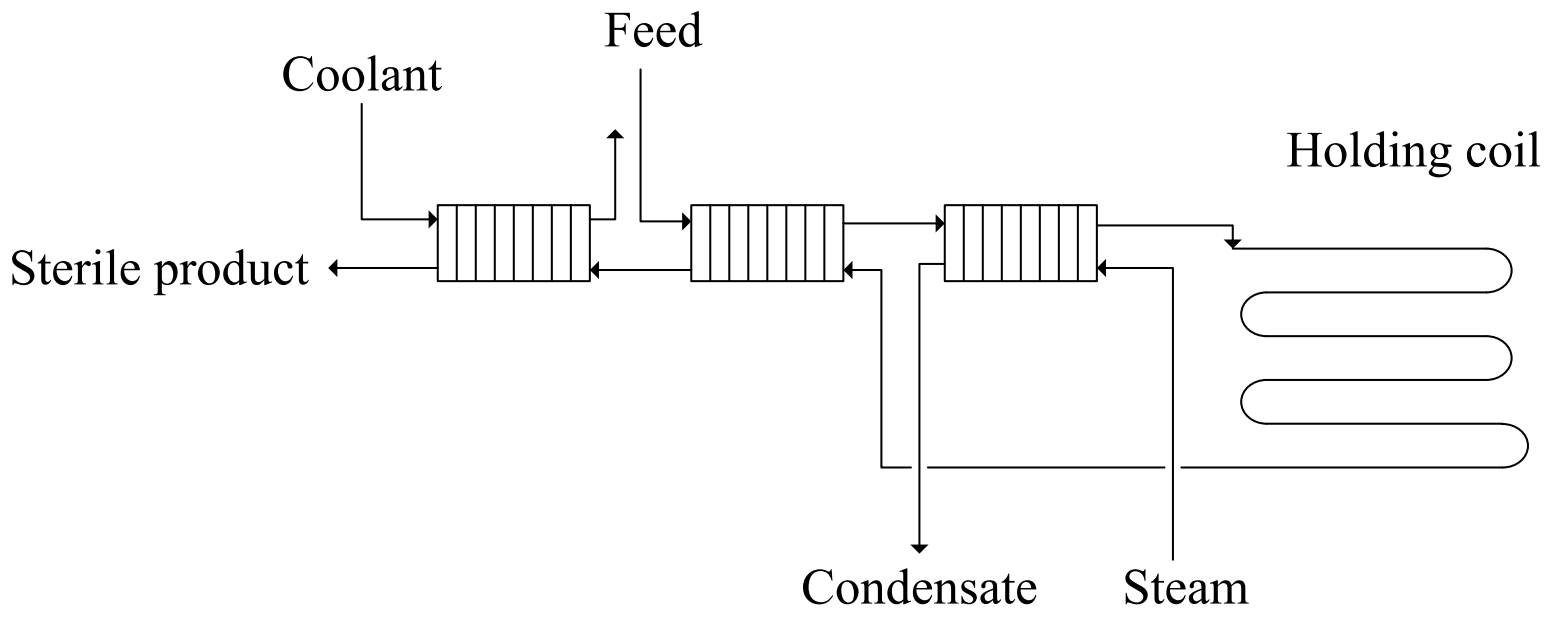

- Uses less hot and cold utility
- Possibility of feed to product contamination in exchanger
- Mainly used in robust fermentations, e.g. brewing