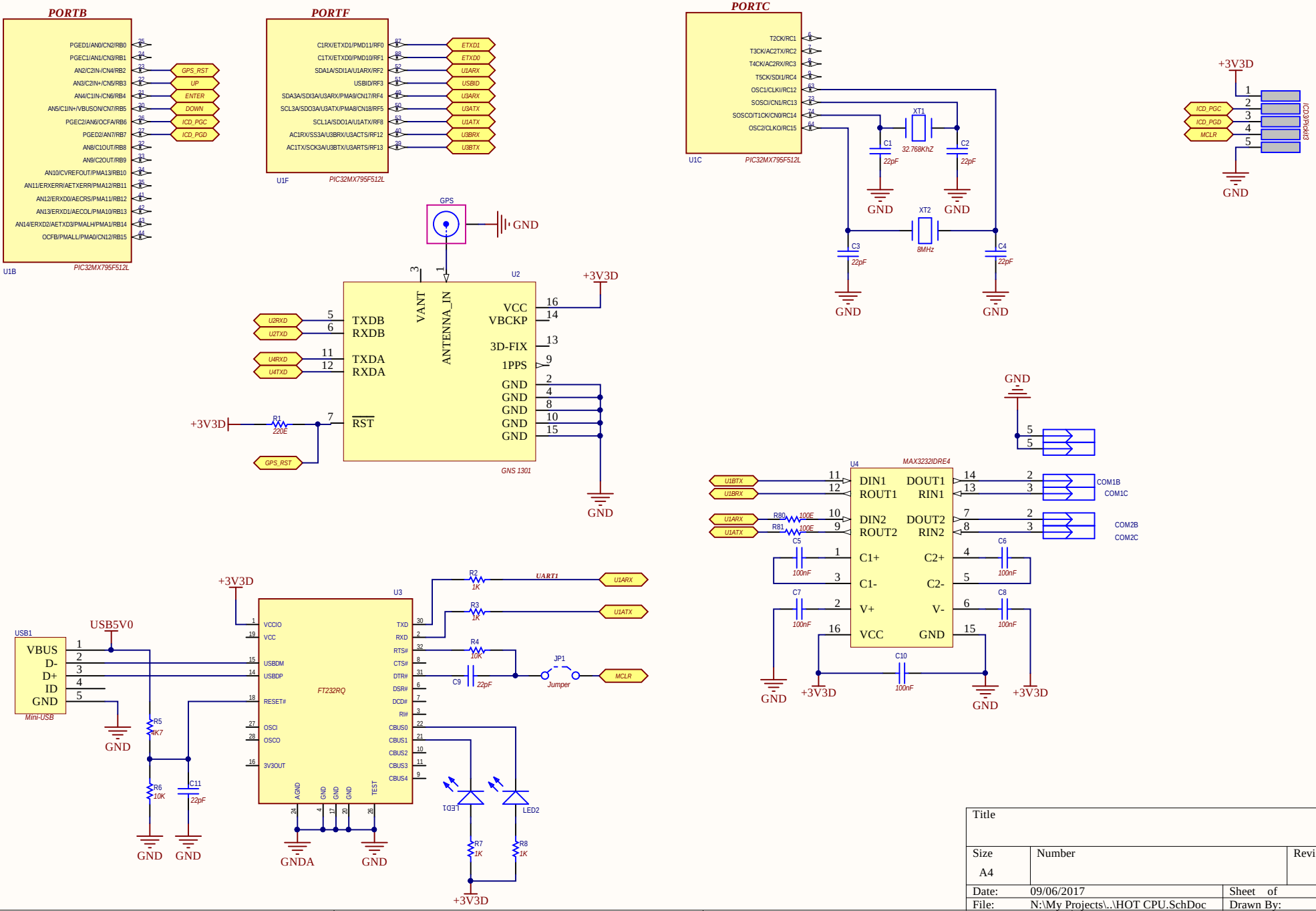

Title		
Size A4	Number	Revision
Date: 09/06/2017		Sheet of
File: N:\My Projects\..\HOT CPU.SchDoc		Drawn By:

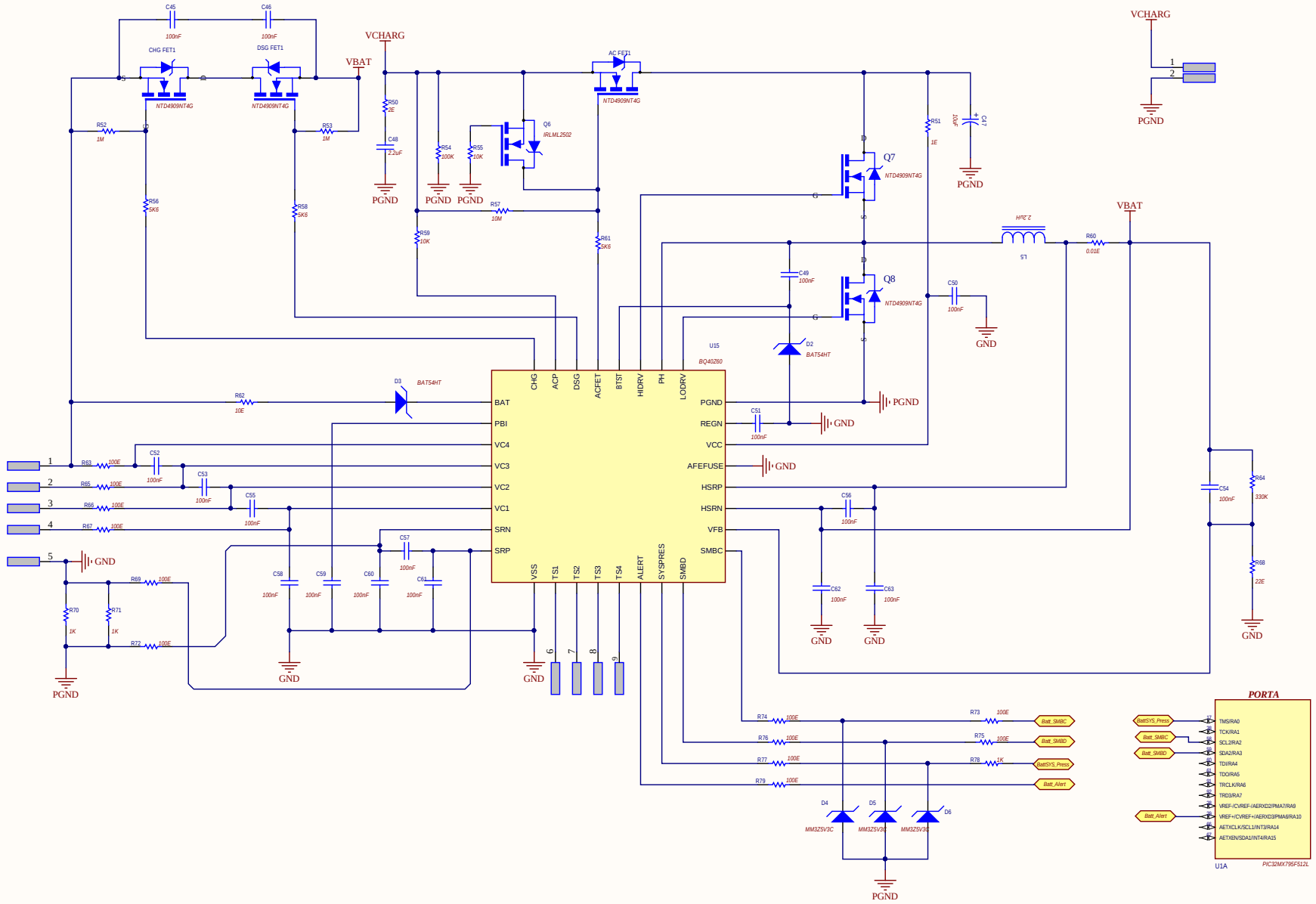

Title			Altium Limited L3, 12a Rodborough Rd Frenchs Forest NSW Australia 2086
Size: A3	Number:	Revision:	
Date: 09/06/2017	Time: 11:37:03	Sheet of	
File: N:\My Projects\Ithuba\Transnet Telemeter\Hardware design\Revision 1.1\HOT\Battery Management.SchDoc			

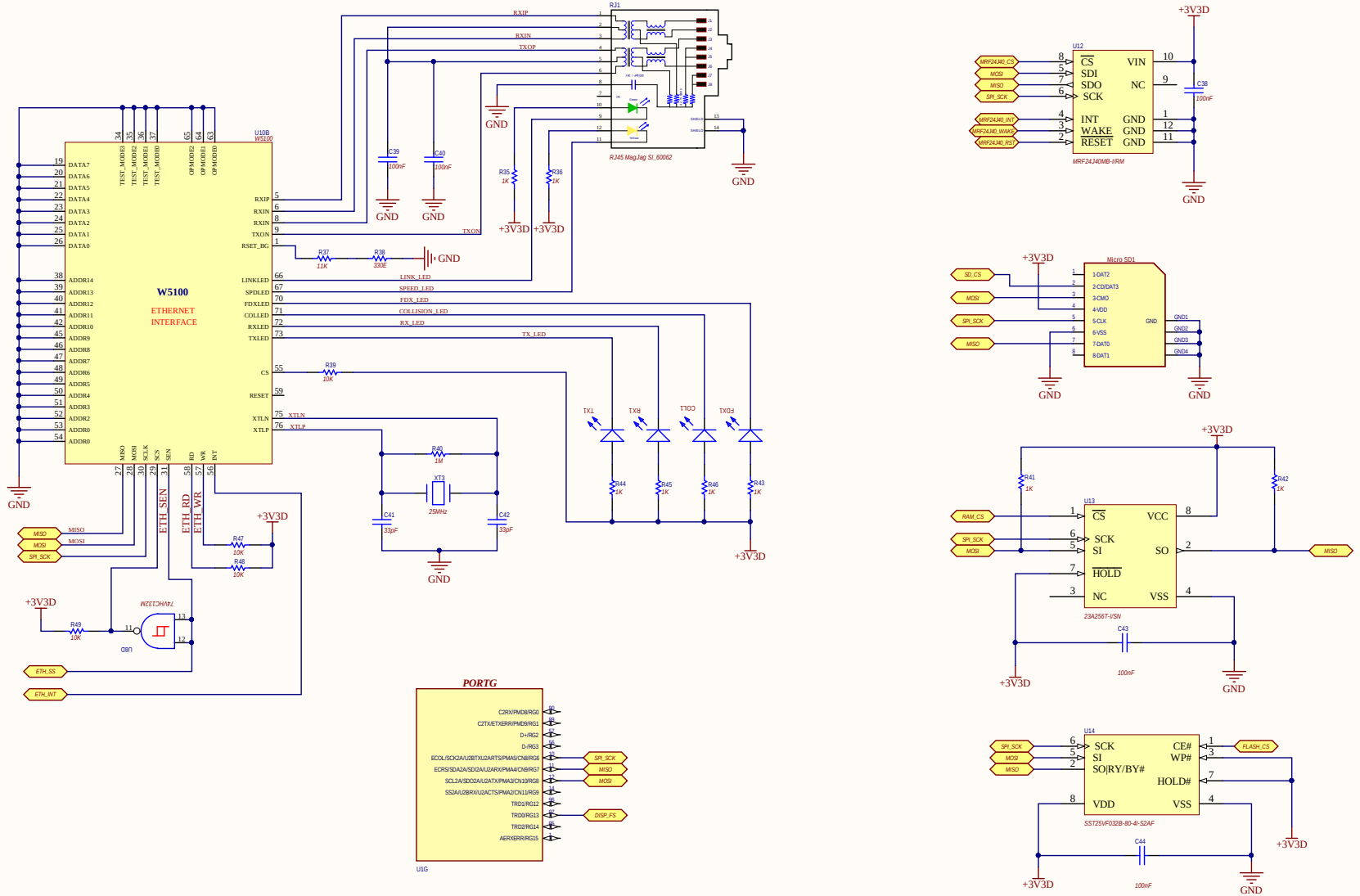

Title		
Size A3	Number	Revision
Date: 09/06/2017		Sheet of
File: N:\My Projects\..\Comms.SchDoc		Drawn By:

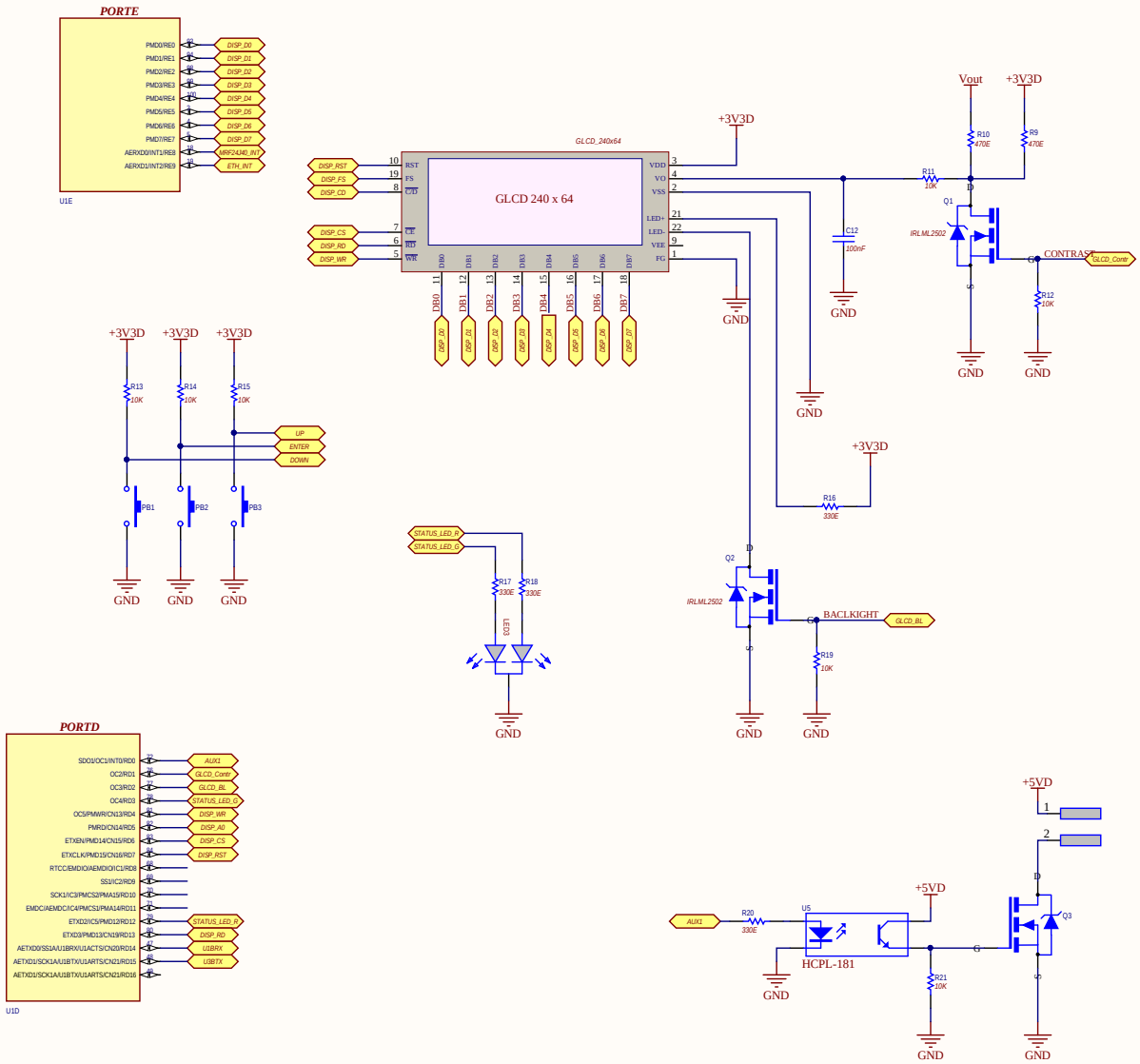

Title		
Size A3	Number	Revision
Date: 09/06/2017	Sheet of	
File: N:\My Projects\..\HOT Display.SchDoc	Drawn By:	

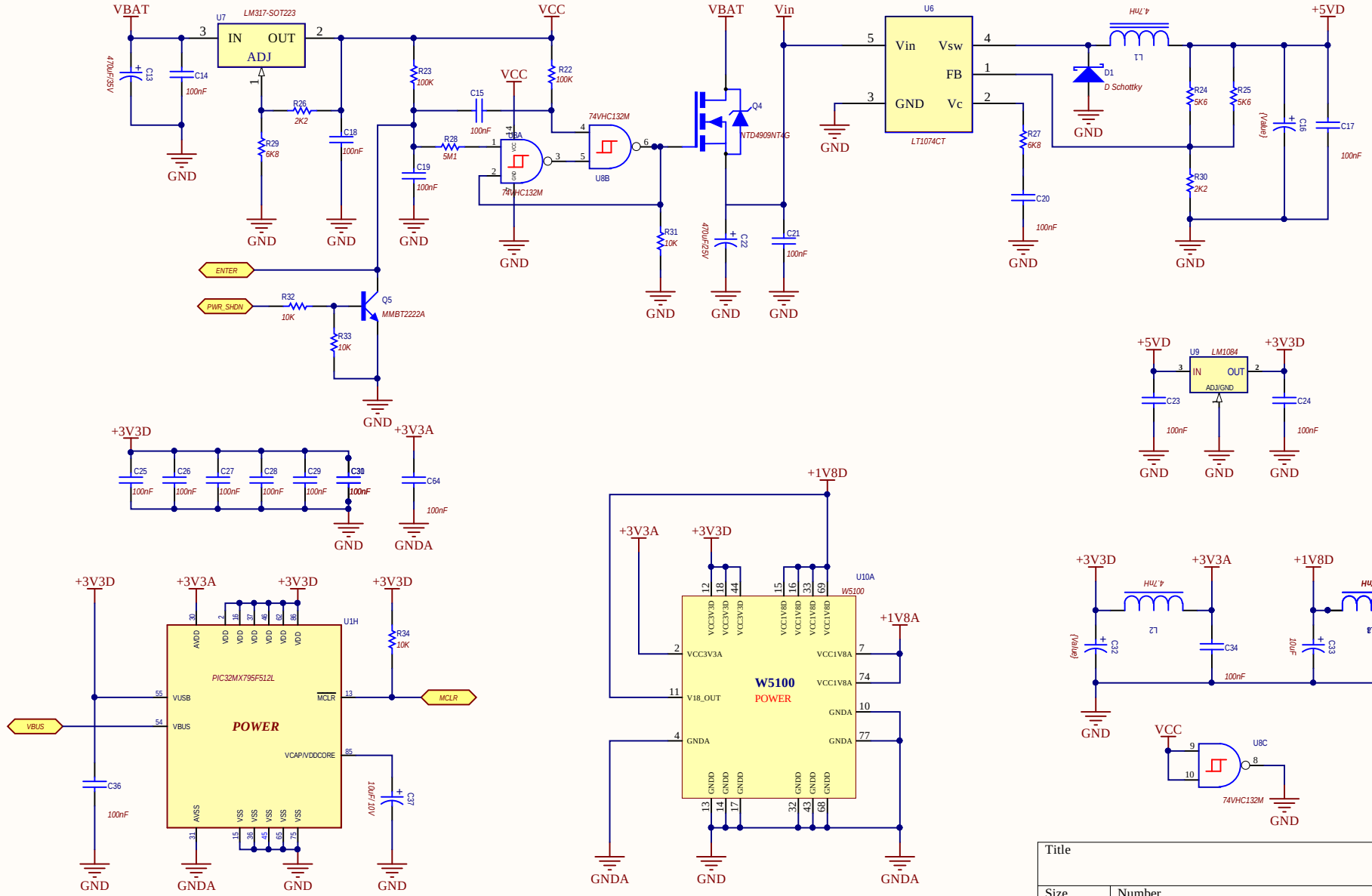

Title		
Size A4	Number	Revision
Date: 09/06/2017	Sheet of	
File: N:\My Projects\..\Power Supply.SchDoc	Drawn By:	

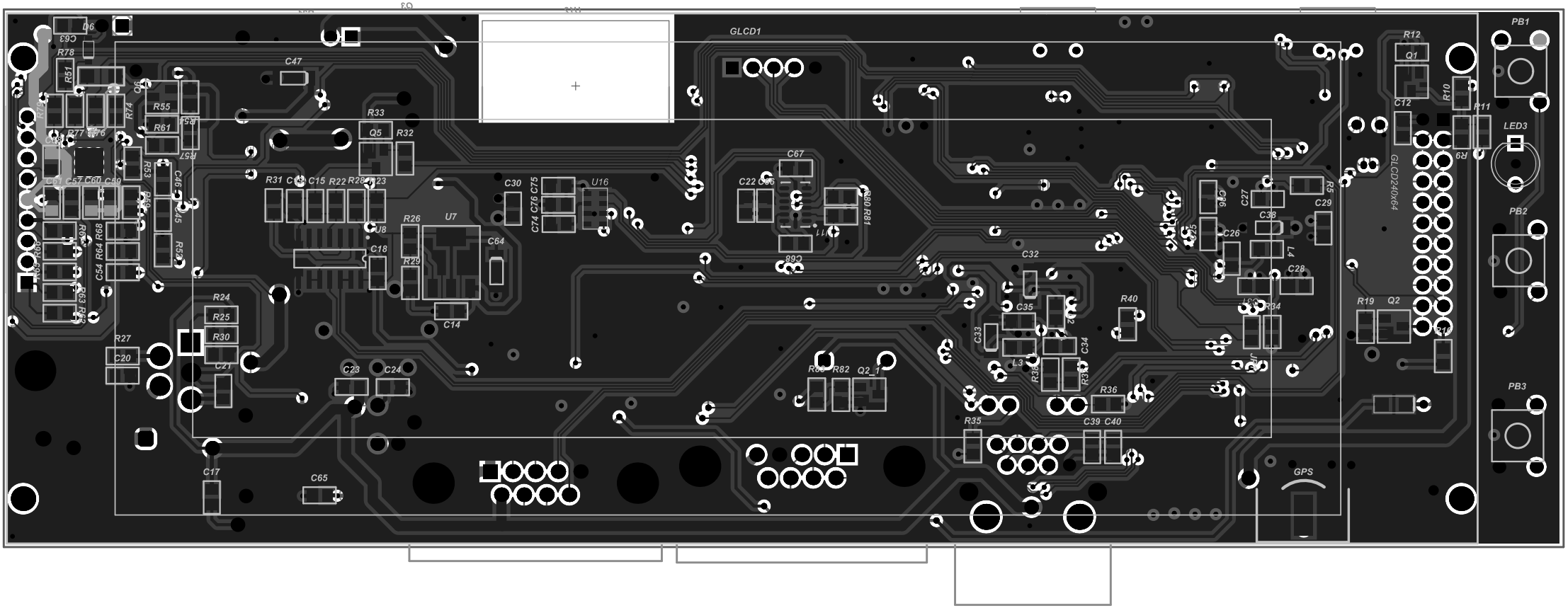
GLCD1
GLCD240x64
PB1
PB2
PB3
LED3
GPS
U7
U8
U16
Q1
Q2
Q5
Q2_1
R12
R10
R11
R19
R26
R29
R33
R32
R31
R24
R25
R30
R27
R35
R36
R40
R82
C47
C67
C30
C64
C14
C17
C65
C18
C20
C21
C23
C24
C22
C32
C35
C33
C34
C39
C40
C26
C27
C28
C29
C38
C12
L3
L4
R5
R9
R78
R51
R55
R61
R74
R77
R53
R68
R64
R54
R63
R80
R81
R82
R38
R34
R36
R35
C46
C45
C57
C60
C59
C54
C63
D6

Comment	Description	Designator	Footprint	LibRef	Quantity
NTD4909N74G	NTD4909N74G	AC FET1, CH1 FET1, DSG FET1, Q3, Q4	DPAK	NTD4909N74G	5
CON_Cways	amtec Way Friction Connector Straight Single In Line	AUX	HDR1X2	CDN2 - Friction	1
IDC9	amtec 9Ways Male Connector Straight Friction	BAT1	HDR1X9 -Frict	CDN9M_SIL_Friction	1
Cap Semi 0805	Capacitor SMD 0805, Capacitor SMD 0805, Capacitor SMD 0805, Capacitor SMD 0805, Capacitor SMD 0805, Capacitor SMD 0805, Capacitor SMD 0805, Capacitor SMD 0805, Capacitor SMD 0805, Capacitor SMD 0805, Capacitor SMD 0805, Capacitor SMD, Capacitor SMD, Capacitor SMD, Capacitor SMD, Capacitor SMD, Capacitor SMD, Capacitor SMD, Capacitor SMD, Capacitor SMD, Capacitor SMD, Capacitor SMD, Capacitor SMD, Capacitor SMD, Capacitor SMD, Capacitor SMD, Capacitor SMD, Capacitor SMD, Capacitor SMD	C1, C2, C3, C4, C5, C6, C7, C8, C9, C10, C11, C14, C18, C19, C21, C25, C26, C27, C28, C29, C30, C31, C34, C35, C36, C38, C43, C44, C64	C - 0805	Cap Semi, Cap Semi, Cap Semi, Cap Semi, Cap Semi, Cap Semi, Cap Semi, Cap Semi, Cap Semi, Cap Semi, Cap 0805, Cap 0805, Cap 0805, Cap 0603, Cap 0603, Cap 0603, Cap 0603, Cap 0603, Cap 0603, Cap 0805, Cap 0805, Cap 0603, Cap 0603, Cap 0603, Cap 0805	29
Cap 0805	Capacitor SMD	C12, C17, C23, C24, C39, C40, C41, C42, C45, C46, C48, C49, C50, C51, C52, C53, C54, C55, C56, C57, C58, C59, C60, C61, C62, C63	C-0805	Cap 0805	26
Cap Tantalum TH	Tantalum Capacitor SMD	C13	C-TANTHC	C-TANTHC	1
Wima Capacitor	Wima Capacitor	C15, C20	Cap - Wima 60x250x700	Cap-Wima 60x250x700	2
Cap Tantalum TH	Tantalum Capacitor SMD	C16	C-TANTHD	C-TANTHD	1
Cap Elect_SMD 470 uF 10x10.5 HT	SMD Electrolytic Capacitor	C22	470 uF 10x10.5 HT	Cap Elect_SMD 470 uF 10x10.5 HT	1
Cap Tantalum TH	Tantalum Capacitor SMD	C32, C33, C47	C-TANTHA	C-TANTHA	3
Cap Tantalum TH	Tantalum Capacitor SMD	C37	C-TANTHB - 10uF 10V	C-TANT 10uF / 10V #B	1
CON_Cways	amtec Way Friction Connector Straight Single In Line	CHRG	HDR-1X2	CDN2 - Friction	1
LED-SMD_0805-RED	LED 0805 Red	CDL1, LED1	LED3mm-Through Hole	LED-SMD_0805-RED	2
RS232F_PCB_RA	RS232 Connector Female PMT	CDM1	DB9F - PCB	RS232F_PCB_RA	1
RS232M_PCB_RA	RS232 ConnaMale PCB Right angle	CDM2	DB9M - PCB	RS232M_PCB_RA	1
D Schottky	Schottky Diode	D1	Shottkey TH	D Schottky	1
BAT54HT	Zener Diode	D2, D3	SOD123F	BAT54H	2
MM3Z5V3C	Zener Diode	D4, D5, D6	SOD323	MM3Z5V3	3
LED-SMD_0805-GREEN	LED SMD 0805-GREEN	FDX1, LED2, RX1, TX1	LED-0805 - Red	LED-SMD_0805-GREEN	4
GLCD_240x64	Graphic LCD 240 x 64	GLCD1	GLCD - MC240064AW	GLCD_240x64	1
SMA_Edge	SMB Edge Connector	GPS	SMA - Edge	SMA_Edge	1
ICD3/Pickit3	amtec 5Way Female Connector Right Angle	ICD	HDR1X5H	CDN5_RA	1
Jumper	Jumper Wire	JP1	R-0805	Jumper	1
INDUCTOR SMT Coilcraft	INDUCTOR-100uH SMT	L1	Coilcraft LP	INDUCTOR SMT Coilcraft	1
Ferrite Bead-SMT 0805	Ferrite Bead -SMT 0805	L2, L3, L4	L-0805	Ferrite Bead-SMT 0805	3
INDUCTOR-SMT_IHLP2020	INDUCTOR-100uH square	L5	IHLP2020	INDUCTOR-SMT_IHLP2020	1
Bi-color LED	Bi-Color LED	LED3	Bi-LED 5mm-Through Hole	Bi-color LED	1
SDCARD	SD Card SDCARD 15TW 8821	Micro SD1	SDCARD-15TW-8821	SDCARD	1
PB TH	Tictile Switch TH	PB1, PB2, PB3	PB_SWITCH_TH	PB TH	3
IRLML2502	HEXFET Power MOSFET	Q1, Q2, Q6	SOT-23	IRLML2803	3
MMBT2222A	NPN Switching Transistor	Q5	SOT-23	MMBT2222A	1
IRLML2502	NTD4909N74G	Q7, Q8	DPAK	NTD4909N74G	2
Resistor - SMD 0805	Resistor - SMD 0805	R1	R-0805 - 220E	R0805- 220E	1
Resistor - SMD 0805	Resistor - SMD 0805	R2, R3, R7, R8	R0805- 1K	R0805- 10K	4
Resistor - SMD 0805	Resistor - SMD 0805	R4, R32, R33, R34, R39, R47, R48, R49, R55, R59	R-0805 - 10K	R0805- 10K	10
Resistor - SMD 0805	Resistor - SMD 0805	R5	R-0805 - 4K7	R0805- 4K7	1
Resistor - SMD 0603	Resistor - SMD 0603	R6, R11, R12, R13, R14, R15, R19, R21, R31	R-0805 - 10K	R-0603, R- 0805, R-0805, R- 0805, R- 0805, R-0805, R- 0805, R-0805- SM1	9
Resistor - SMD 0603	Resistor - SMD 0603	R9, R10, R22, R23, R26, R28, R29	R-0603	R- 0805, R- 0805, R0805-100K, R0805- 100K, R0805- 2K2, R0805-SM1, R0805- 6K8	7
Resistor - SMD 0805	Resistor - SMD 0805	R16, R17, R18, R20, R38	R-0805 - 330E	R0805- 330E	5
Resistor - SMD 0805	Resistor - SMD 0805	R24, R25, R56, R58, R61	R-0805 - 5K6	R0805- 5K6	5
Resistor - SMD 0805	Resistor - SMD 0805	R27	R-0805 - 6K8	R0805- 6K8	1
Resistor - SMD 0805	Resistor - SMD 0805	R30	R-0805 - 2K2	R0805- 2K2	1
Resistor - SMD 0805	Resistor - SMD 0805	R35, R36, R41, R42, R43, R44, R45, R46, R78	R-0805 - 1K	R0805- 1K	9
Resistor - SMD 0805	Resistor - SMD 0805	R37	R-0805 - 12K	R0805- 12K, 1%	1
Resistor - SMD 0805	Resistor - SMD 0805	R40, R52, R53	R-0805 - 1M	R0805- 1M	3
Resistor - SMD 1206	Resistor - SMD 1206	R50, R51, R70, R71	R-1206	R-1206	4
Resistor - SMD 0805	Resistor - SMD 0805	R54	R-0805 - 100K	R0805- 100K	1
Resistor - SMD 0805	Resistor - SMD 0805	R57	R-0805 - 10M	R0805-10M	1
Resistor - SMD 0805	Resistor - SMD 0805	R60	R-2512	R2512- 10mE	1
Resistor - SMD 0805	Resistor - SMD 0805	R62	R-0805 - 10E	R0805- 10E	1
Resistor - SMD 0805	Resistor - SMD 0805	R63, R65, R66, R67, R69, R72, R73, R74, R75, R76, R77, R79, R80, R81	R-0805 - 100E	R0805- 100E	14
Resistor - SMD 0805	Resistor - SMD 0805	R64	R-0805 - 330K	R0805- 330K	1
Resistor - SMD 0805	Resistor - SMD 0805	R68	R-0805 - 22E	R0805- 22E	1
RJ45 MagJag SI_60062		RJ1	MagJag_SI_60062	RJ45 MagJag SI_60062	1
PIC32MX795F512L	High Performance, USB, CAN and Ethernet 32-Bit Flash Microcontroller	U1	TQFP-PF100_N	PIC32MX7X5F*L-PT	1
GNS 1301	GPS Module	U2	GNS1301	GNS1301	1
FT232RQ	FTDI USB UART Serial Converter	U3	QFN32	FT232RQ	1
MAX3232IDR\E4	3-V to 5.5-V Multichannel RS-232 Line Driver / Receiver with ±15-kV ESD Protection, -40 to 85 degC, 16-Pin SOIC (D), Green (RoHS & no Sb/Br)	U4	TI-D16_N	MAX3232IDR\E4	1
HCPL-181	4-Pin Phototransistor Optocoupler	U5	PC357	HCPL181	1
LT1074CT	LT1074CT	U6	LT1074_TO-220-5_H	LT1074CT- Horiz	1
LM317-SOT223	Adjustable Regulator with 3.7 to 38 V Input and 1.2 to 32 V Output, -40 to 125 degC,	U7	LM317_SOT-223	LM317-SOT223	1
74VHC132M	QUAD 2-Input NAND Schmitt Trigger	U8	SO14	74VHC132M	1
LM1084	Adjustable Regulator with 3.7 to 38 V Input and 1.2 to 32 V Output, -40 to 125 degC, 3-Pin TO-92 (LP) Pb-Free (RoHS)	U9	TO-263 - LM1084	LM1084 - DPAK	1
W5100		U10	W5100	W5100	1
MRF24J40MB -I/RM	2.4 GHz IEEE Std. 802.15.4, 20 dBm RF Transceiver 12-Pin Module, Industrial Temperature	U12	MRF24J40MB	MRF24J40MB -I/RM	1
23A256T-I/SN	256K, 32768x8-bit, 1.8V SPI Serial SRAM, 8-Pin SOIC 3.9mm, Industrial Temperature/Tape and Reel	U13	SOIC-SN8_N	23A256T-I/SN	1
SST25VF032B-80-4I-S2AF	32 Mbit SPI Serial Flash, 2.7 to 3.6 V, 80 MHz, -40 to 85 degC, 8-pin SOIC (S2AB), Tube	U14	MCHP-SOIC-S2AB_N	SST25VF032B-80-4I-S2AF	1
BQ40Z60	Programmable Battery Pack Manager	U15	o-VQFN32	BQ40Z60	1
Mini-USB	Mini USB - Type B 5 pins	USB1	Mini-USB Series B	Mini-USB	1
XTAL_MINIATURE_C26	Miniature Tuning Fork Crystal	XT1	XTAL_MINIATURE_C26_XTAL_MINIATURE_C26(Primary)	XTAL_MINIATURE_C26	1
CRYSTAL-8MHz - Low Profile	Crystal Vert Metal Can (11x5mm)	XT2	8MHz - RG	CRYSTAL-8MHz - Low Profile	1
CRYSTAL-25MHz - Low P	Crystal Vert Metal Can (	XT3	25MHz - RG	CRYSTAL-25MHz - Low P	1