1. ALL RESISTANCE VALUES ARE IN OHMS, 0.1 WATT +/- 5%.
2. ALL CAPACITANCE VALUES ARE IN MICROFARADS.
3. ALL CRYSTALS & OSCILLATOR VALUES ARE IN HERTZ.

| REV | ECN | DESCRIPTION OF REVISION | CK APPD / DATE |
|---|---|---|---|
| A | 0004536627 | PRODUCTION RELEASED | 2015-07-21 |

# N71 MLB - PVT OK2FAB

LAST_MODIFICATION=Tue Jul 21 11:39:02 2015


| PAGE | <CSA> | CONTENTS | SYNC | DATE |
|---|---|---|---|---|
| 1 | 1 | TABLE OF CONTENTS | | |
| 2 | 3 | SYSTEM:BOM TABLES | | |
| 3 | 4 | SYSTEM:N71 SPECIFIC | | |
| 4 | 6 | SYSTEM:MECHANICAL | | |
| 5 | 7 | SOC:JTAG,USB,XTAL | | |
| 6 | 8 | SOC:PCIE | | |
| 7 | 9 | SOC:CAMERA & DISPLAY | | |
| 8 | 10 | SOC:SERIAL & GPIO | | |
| 9 | 11 | SOC:OWL | | |
| 10 | 12 | SOC:POWER (1/3) | | |
| 11 | 13 | SOC:POWER (2/3) | | |
| 12 | 15 | SOC:POWER (3/3) | | |
| 13 | 20 | NAND | | |
| 14 | 21 | SYSTEM POWER:PMU (1/3) | | |
| 15 | 22 | SYSTEM POWER:PMU (2/3) | | |
| 16 | 23 | SYSTEM POWER:PMU (3/3) | | |
| 17 | 24 | SYSTEM POWER:CHARGER | | |
| 18 | 30 | SYSTEM POWER:BATTERY CONN | | |
| 19 | 31 | SENSORS:MOTION SENSORS | | |
| 20 | 32 | CAMERA:FOREHEAD FLEX B2B | | |
| 21 | 33 | CAMERA:REAR CAMERA B2B | | |
| 22 | 35 | CAMERA:STROBE DRIVER | | |
| 23 | 36 | AUDIO:CALTRA CODEC (1/2) | | |
| 24 | 37 | AUDIO:CALTRA CODEC (2/2) | | |
| 25 | 38 | AUDIO:SPEAKER DRIVER | | |
| 26 | 40 | AUDIO:ARC DRIVER | | |
| 27 | 41 | DISPLAY:POWER | | |
| 28 | 42 | TOUCH:ORB & MESA B2B | | |
| 29 | 45 | DISPLAY:KEPLER B2B | | |
| 30 | 46 | I/O:TRISTAR 2 | | |
| 31 | 47 | I/O:DOCK FLEX B2B | | |
| 32 | 49 | I/O:BUTTON FLEX B2B | | |
| 33 | | BASEBAND:RADIO SYMBOL | | |
| 34 | | page1 | | |
| 35 | | ELNA & UAT ANT FEED | | |
| 36 | | FE: ANT CONNECTORS AND UAT TUNER | | |
| 37 | | WLAN LAT 2.4GHZ BAW BPF | | |
| 38 | | DEBUG CONN & TEST POINTS | | |
| 39 | | CELLULAR BASEBAND: POWER1 | | |
| 40 | | CELLULAR BASEBAND: POWER2 | | |
| 41 | | CELLULAR BASEBAND: CONTROL AND INTERFACES | | |
| 42 | | CELLULAR BASEBAND: GPIOS | | |
| 43 | | CELLULAR PMU: CONTROL AND CLOCKS | | |
| 44 | | CELLULAR PMU: SWITCHERS AND LDOS | | |
| 45 | | CELLULAR PMU: ET MODULATOR | | |
| 46 | | CELLULAR TRANSCEIVER: POWER | | |
| [illegible] | | CELLULAR TRANSCEIVER: TX PORTS | | |
| [illegible] | | CELLULAR TRANSCEIVER: DRX/GPS PORTS | | |
| [illegible] | | CELLULAR TRANSCEIVER: TX PORTS | | |
| 50 | | CELLULAR FRONT END: LB PAD | | |
| 51 | | CELLULAR FRONT END: MB PAD | | |
| 52 | | CELLULAR FRONT END: HB PAD | | |
| 53 | | CELLULAR FRONT END: 2G PA | | |
| 54 | | CELLULAR FRONT END: LB ASM | | |
| 55 | | CELLULAR FRONT END: MB-HB ASM | | |
| 56 | | CELLULAR FRONT END: DIVERSITY | | |
| 57 | | SIM | | |
| 58 | | WIFI/BT: WIFI/BT MODULE | | |
| 59 | | STOCKHOLM | | |

TABLE


20190711敬恒

SCH 051-1902
BRD 820-5507
MCO 056-01060

BOM 639-00263 (BETTER,DB30)
BOM 639-00265 (ULTRA,DB30)
BOM 639-00266 (SUPREME,DB30)
BOM 639-01056 (BETTER,B30)
BOM 639-01057 (ULTRA,B30)
BOM 639-01058 (SUPREME,B30)
BOM 639-01098 (BETTER,DB30C)
BOM 639-01100 (ULTRA,DB30C)
BOM 639-01099 (SUPREME,DB30C)
BOM 939-01627 (BETTER,DARWIN)

TABLE OF CONTENTS

DRAWING TITLE: SCHEM,SINGLE,BRD,N71

Apple Inc.

DRAWING NUMBER: 051-1902 SIZE: D
REVISION: A.0.0
BRANCH:
PAGE: 1 OF 49
SHEET: 1 OF 59

NOTICE OF PROPRIETARY PROPERTY:
THE INFORMATION CONTAINED HEREIN IS THE PROPRIETARY PROPERTY OF APPLE INC.
THE POSESSOR AGREES TO THE FOLLOWING:
I TO MAINTAIN THIS DOCUMENT IN CONFIDENCE
II NOT TO REPRODUCE OR COPY IT
III NOT TO REVEAL OR PUBLISH IT IN WHOLE OR PART
IV ALL RIGHTS RESERVED

## SCHEMATIC & PCB BOM CALLOUTS

| PART# | QTY | DESCRIPTION | REFERENCE DESIGNATOR(S) | CRITICAL | BOM OPTION |
|---|---|---|---|---|---|
| 051-1902 | 1 | SCH,SINGLE_BRD,N71 | SCH | CRITICAL | ? |
| 820-5507 | 1 | PCBF,SINGLE_BRD,N71 | PCB | CRITICAL | ? |
| 825-6838 | 1 | EEEE CODE FOR 639-00263 | EEEE_G2KM | CRITICAL | EEEE_16G_DB30 |
| 825-6838 | 1 | EEEE CODE FOR 639-00265 | EEEE_G2KN | CRITICAL | EEEE_64G_DB30 |
| 825-6838 | 1 | EEEE CODE FOR 639-00266 | EEEE_G2KL | CRITICAL | EEEE_128G_DB30 |
| 825-6838 | 1 | EEEE CODE FOR 639-01056 | EEEE_GKF9 | CRITICAL | EEEE_16G_B30 |
| 825-6838 | 1 | EEEE CODE FOR 639-01057 | EEEE_GKFC | CRITICAL | EEEE_64G_B30 |
| 825-6838 | 1 | EEEE CODE FOR 639-01058 | EEEE_GKF8 | CRITICAL | EEEE_128G_B30 |
| 825-6838 | 1 | EEEE CODE FOR 639-01098 | EEEE_GLHL | CRITICAL | EEEE_16G_DB30C |
| 825-6838 | 1 | EEEE CODE FOR 639-01100 | EEEE_GLHR | CRITICAL | EEEE_64G_DB30C |
| 825-6838 | 1 | EEEE CODE FOR 639-01099 | EEEE_GLHM | CRITICAL | EEEE_128G_DB30C |
| 825-6838 | 1 | EEEE CODE FOR 939-01627 | EEEE_GR09 | CRITICAL | EEEE_16G_DARWIN |

## S3E NAND BOM OPTIONS

| PART# | QTY | DESCRIPTION | REFERENCE DESIGNATOR(S) | CRITICAL | BOM OPTION |
|---|---|---|---|---|---|
| 335S00039 | 1 | NAND,1YNM,16GX8,S3E,64G,T,SLGA70 | U1500 | CRITICAL | NAND_16G |
| 335S00075 | 1 | NAND,1YNM,64GX8,S3E,MLB,64G,H,SLGA70 | U1500 | CRITICAL | NAND_64G |
| 335S00079 | 1 | NAND,1YNM,128GX8,S3E,TLC,128G,H,SLGA70 | U1500 | CRITICAL | NAND_128G |

| PART NUMBER | ALTERNATE FOR PART NUMBER | BOM OPTION | REF DES | COMMENTS: |
|---|---|---|---|---|
| 335S00074 | 335S00039 | NAND_16G | U1500 | HYNIX 16G SLGA70 C DIE |
| 335S00078 | 335S00075 | NAND_64G | U1500 | HYNIX 64G SLGA70 |
| 335S00064 | 335S00075 | NAND_64G | U1500 | SANDISK 64G SLGA70 1Z |
| 335S00065 | 335S00079 | NAND_128G | U1500 | SANDISK 128G SLGA70 |

## CARBON/ACCEL BOM OPTIONS

| PART# | QTY | DESCRIPTION | REFERENCE DESIGNATOR(S) | BOM OPTION |
|---|---|---|---|---|
| 338S1163 | 1 | IC,ACCEL,3-AXIS,DIG,BMA282,LGA14 | U3030 | NOSTUFF |
| 117S0202 | 1 | RES,MF,20 OHM,5%,1/32W,01005 | R3030 | NOSTUFF |
| 117S0202 | 1 | RES,MF,20 OHM,5%,1/32W,01005 | R3031 | NOSTUFF |
| 117S0202 | 1 | RES,MF,20 OHM,5%,1/32W,01005 | R3032 | NOSTUFF |
| 138S0831 | 1 | CAP,CER,X5R,2.2UF,20%,6.3V,0201 | C3031 | NOSTUFF |
| 132S0316 | 1 | CAP,CER,X5R,0.1UF,20%,6.3V,01005 | C3032 | NOSTUFF |
| 338S00017 | 1 | IC,CARBON,MPU-6700-12,LGA16 | U3010 | INVENSENSE_CARBON |
| 338S1163 | 1 | IC,ACCEL,3-AXIS,DIG,BMA282,LGA14 | U3030 | INVENSENSE_CARBON |
| 117S0202 | 1 | RES,MF,20 OHM,5%,1/32W,01005 | R3030 | INVENSENSE_CARBON |
| 117S0202 | 1 | RES,MF,20 OHM,5%,1/32W,01005 | R3031 | INVENSENSE_CARBON |
| 117S0202 | 1 | RES,MF,20 OHM,5%,1/32W,01005 | R3032 | INVENSENSE_CARBON |
| 138S0831 | 1 | CAP,CER,X5R,2.2UF,20%,6.3V,0201 | C3031 | INVENSENSE_CARBON |
| 132S0316 | 1 | CAP,CER,X5R,0.1UF,20%,6.3V,01005 | C3032 | INVENSENSE_CARBON |
| 338S00087 | 1 | IC,CARBON 1.1,MPU-6800-00,LGA16 | U3010 | INVENSENSE_STANDALONE_CARBON |

## ALTERNATE BOM OPTIONS

| PART NUMBER | ALTERNATE FOR PART NUMBER | BOM OPTION | REF DES | COMMENTS: | |
|---|---|---|---|---|---|
| 138S00032 | 138S0831 | ALTERNATE | C0610 | TY,2.2UF,0201 | NOT ALL REFERENCE DESIGNATORS LISTED. USED ~116 TIMES IN DESIGN. |
| 138S00049 | 138S0831 | ALTERNATE | C0610 | KYOCERA,2.2UF,0201 | USED ~116 TIMES IN DESIGN. |
| 155S0660 | 155S0513 | ALTERNATE | FL3100 | MURATA,FERR,22-OHM | USED ~7 TIMES IN DESIGN. |
| 138S00005 | 138S00003 | ALTERNATE | C2000 | TY,15UF,0402 | USED ~63 TIMES IN DESIGN. |
| 138S00048 | 138S00003 | ALTERNATE | C2000 | KYOCERA,15UF,0402 | USED ~63 TIMES IN DESIGN. |
| 138S0702 | 138S0657 | ALTERNATE | C2111 | MURATA,4.3UF,0610 | USED ~3 TIMES IN DESIGN. |
| 118S0764 | 118S0717 | ALTERNATE | R2250 | PANASONIC,3.92K-OHM,0201 | |
| 138S00006 | 138S0835 | ALTERNATE | C1106 | TY,4.3UF,0402 | USED ~19 TIMES IN DESIGN. |
| 152S2052 | 152S1929 | ALTERNATE | L2060 | CYNTEC,1UH,1608 | |
| 155S0773 | 155S0453 | ALTERNATE | FL3110 | TY,FERR,120-OHM,01005 | USED ~61 TIMES IN DESIGN. |
| 377S0168 | 377S0140 | ALTERNATE | DZ3150 | TDK,VARISTOR,6.8V,100PF,01005 | USED ~9 TIMES IN DESIGN. |
| 155S00067 | 155S0581 | ALTERNATE | FL4200 | TDK,FERR,240-OHM,0201 | USED ~8 TIMES IN DESIGN. |
| 155S00012 | 155S00009 | ALTERNATE | L3100 | MURATA,CHOKE,65-OHM,0605 | USED ~11 TIMES IN DESIGN. |
| 138S0706 | 138S0739 | ALTERNATE | C3302_RF | MURATA,CAP,CER,1UF,20%,10V,X5R,0201 | USED ~17 TIMES IN DESIGN. |
| 138S0945 | 138S0739 | ALTERNATE | C3302_RF | KYOCERA,CAP,CER,1UF,20%,10V,X5R,0201 | USED ~17 TIMES IN DESIGN. |
| 155S00095 | 155S00068 | ALTERNATE | FL1280 | FERR BD,100 OHM,25%,100MA,2 OHM,01005 | |
| 138S0648 | 138S0652 | ALTERNATE | C3650 | TY,4.7UF,0402 | USED ~12 TIMES IN DESIGN. |
| 132S0400 | 132S0436 | ALTERNATE | C1280 | CAP,CER,X5R,0.22UF,20%,6.3v,01005 | USED ~2 TIMES IN DESIGN. |
| 155S0960 | 155S0941 | ALTERNATE | FL3151 | FERR BD,70 OHM,25%,300MA,0.4 DCR,01005 | USED ~9 TIMES IN DESIGN. |
| 138S00024 | 138S0986 | ALTERNATE | C1107 | CAP,CER,3-TERM,7.5UF,20%,4V,0402 | USED ~7 TIMES IN DESIGN. |
| 335S00066 | 335S0946 | ALTERNATE | U0900 | IC,EEPROM,16KX8,1.8V,I2C,WLCSP4 | |
| 155S0653 | 155S0511 | ALTERNATE | FL4600 | FERR BD,33 OHM,25%,750MA,0.09DCR,0201 | USED ~4 TIMES IN DESIGN. |

## POWER INDUCTOR ALTERNATES

| PART NUMBER | ALTERNATE FOR PART NUMBER | BOM OPTION | REF DES | COMMENTS: |
|---|---|---|---|---|
| 152S00120 | 152S00077 | ALTERNATE | L2070 | TAIYO 2016 1.0UH |
| 152S00118 | 152S00075 | ALTERNATE | L3700 | TAIYO 2016 1.2UH |

## ACTIVE DIODE ALTERNATE

| PART NUMBER | ALTERNATE FOR PART NUMBER | BOM OPTION | REF DES | COMMENTS: |
|---|---|---|---|---|
| 376S00106 | 376S00047 | ALTERNATE | Q2300 | DIODES INC. ACT DIODE |

## SHIELD PART NUMBERS

| PART# | QTY | DESCRIPTION | REFERENCE DESIGNATOR(S) | BOM OPTION |
|---|---|---|---|---|
| 806-02895 | 1 | SHIELD,EMI,UPPER FRONT,WTOP,N71 | SH0500 | COMMON |
| 806-04588 | 1 | SHIELD,EMI,LOWER FRONT,CLOSED,NOMU,N71 | SH0501 | COMMON |
| 806-03994 | 1 | SHIELD,EMI,SA,OPEN,N71 | SH0502 | COMMON |
| 806-02897 | 1 | SHIELD,EMI,UPPER BACK,WTOP,N71 | SH0503 | COMMON |
| 806-02898 | 1 | SHIELD,EMI,LOWER BACK,WTOP,N71 | SH0504 | COMMON |

## SOC/PMU SUB BOMS

| PART# | QTY | DESCRIPTION | REFERENCE DESIGNATOR(S) | BOM OPTION |
|---|---|---|---|---|
| 685-00069 | 1 | SUBBOM,SINGLE,BRD,MAUI,N71 | SUBBOM_SOC | COMMON |
| 338S00120 | 1 | IC,PMU,ANTIGUA,A0,D2255A1,OTP-AL,WLCSP380 | U2000 | MAUI |
| 118S0631 | 1 | RES,MF,100 OHM,1%,1/32W,01005 | R0730 | MAUI |
| 131S0307 | 1 | CAP,CER,NP0/C0G,100PF,5%,16V,01005 | C0730 | MAUI |
| 339S00112 | 1 | PROD FUSED, H DRAM | U0600 | MAUI |
| 117S0161 | 1 | RES,MF,0 OHM,1/32W,01005 | R0651 | MAUI |

| PART# | QTY | DESCRIPTION | REFERENCE DESIGNATOR(S) | BOM OPTION |
|---|---|---|---|---|
| 338S00122 | 1 | IC,PMU,ANTIGUA,D2255A1,OTP-ZL,WLCSP380 | U2000 | MALTA |
| 118S00009 | 1 | RES,MF,3.01KOHM,1%,1/32W,01005 | R0730 | MALTA |
| 131S0307 | 1 | CAP,CER,NP0/C0G,100PF,5%,16V,01005 | C0730 | NOSTUFF |
| 339S00124 | 1 | M DEV FUSED, M DRAM | U0600 | MALTA |
| 118S00025 | 1 | RES,MF,330 OHM,1%,1/32W,01005 | R0651 | MALTA |

| PART NUMBER | ALTERNATE FOR PART NUMBER | BOM OPTION | REF DES | COMMENTS: |
|---|---|---|---|---|
| 685-00070 | 685-00069 | ALTERNATE | SUBBOM_SOC | SUBBOM,SINGLE,BRD,MALTA,N71 |

## SOC ALTERNATES

| PART NUMBER | ALTERNATE FOR PART NUMBER | BOM OPTION | REF DES | COMMENTS: |
|---|---|---|---|---|
| 339S00113 | 339S00112 | MAUI | U0600 | PROD FUSED, M DRAM |
| 339S00114 | 339S00112 | MAUI | U0600 | PROD FUSED, S DRAM |

| | | | | |
|---|---|---|---|---|
| 339S00125 | 339S00124 | MALTA | U0600 | M PROD FUSED, H DRAM, ATK |
| 339S00126 | 339S00124 | MALTA | U0600 | M PROD FUSED, S DRAM, ATK |
| 339S00127 | 339S00124 | MALTA | U0600 | M PROD FUSED, H DRAM, SCK |
| 339S00128 | 339S00124 | MALTA | U0600 | M PROD FUSED, H DRAM, SCK |
| 339S00129 | 339S00124 | MALTA | U0600 | M PROD FUSED, S DRAM, SCK |

## INDUCTOR SUB BOMS

| PART# | QTY | DESCRIPTION | REFERENCE DESIGNATOR(S) | BOM OPTION |
|---|---|---|---|---|
| 685-00081 | 1 | SUBBOM,SINGLE,BRD,CYNTEC,N71 | SUBBOM_IND | COMMON |
| 152S00074 | 6 | IND,PWR,SHLD,1.0UH,3.6A,0.060 OHM,2016 | L2000,L2002,L2010,L2012,L2020,L2030 | CYNTEC |
| 152S00074 | 5 | IND,PWR,SHLD,1.0UH,3.6A,0.060 OHM,2016 | L2040,L2050,L2300,L3300,L4021 | CYNTEC |
| 152S00081 | 6 | IND,PWR,SHLD,0.47UH,3.8A,0.048 OHM,2012 | L2001,L2003,L2011,L2013,L2021,L2041 | CYNTEC |

| PART# | QTY | DESCRIPTION | REFERENCE DESIGNATOR(S) | BOM OPTION |
|---|---|---|---|---|
| 152S00117 | 6 | IND,PWR,SHLD,1.0UH,3.6A,0.060 OHM,2016 | L2000,L2002,L2010,L2012,L2020,L2030 | TAIYO |
| 152S00117 | 5 | IND,PWR,SHLD,1.0UH,3.6A,0.060 OHM,2016 | L2040,L2050,L2300,L3300,L4021 | TAIYO |
| 152S00121 | 6 | IND,PWR,SHLD,0.47UH,3.8A,0.048 OHM,2012 | L2001,L2003,L2011,L2013,L2021,L2041 | TAIYO |

| PART NUMBER | ALTERNATE FOR PART NUMBER | BOM OPTION | REF DES | COMMENTS: |
|---|---|---|---|---|
| 685-00080 | 685-00081 | ALTERNATE | SUBBOM_IND | SUBBOM,SINGLE,BRD,TAIYO,N71 |

201907-王敬恒

PAGE TITLE
SYSTEM:BOM TABLES

Apple Inc.

DRAWING NUMBER 051-1902 SIZE D
REVISION A.0.0
BRANCH
PAGE 3 OF 49
SHEET 2 OF 59

NOTICE OF PROPRIETARY PROPERTY:
THE INFORMATION CONTAINED HEREIN IS THE PROPRIETARY PROPERTY OF APPLE INC.
THE POSESSOR AGREES TO THE FOLLOWING:
I TO MAINTAIN THIS DOCUMENT IN CONFIDENCE
II NOT TO REPRODUCE OR COPY IT
III NOT TO REVEAL OR PUBLISH IT IN WHOLE OR PART
IV ALL RIGHTS RESERVED

# TESTPOINTS

## POWER

TP00 — VOLTAGE=0V — POWER GROUND

TP01 — PP5V0_USB — VBUS

电池电压测试点

TP02 — PP_BATT_VCC — VBATT

TP03 — VBATT

TP05

## RESET

TP06 — PMU_TO_SYSTEM_COLD_RESET_L — SOC & BB RESET

## DFU

TP07 — FORCE_DFU

PP07 — PP1V8

PP08 — DFU_STATUS

FORCE DFU PROCEDURE:

1. FROM OFF MODE SHORT TP07 TO PP07
2. PLUG IN E75 CABLE TO FORCE DFU

## E75

TP08 — TRISTAR_DP1_CONN_P

TP09 — TRISTAR_DP1_CONN_N

TRISTAR USB

TP10 — TRISTAR_DP2_CONN_P

TP11 — TRISTAR_DP2_CONN_N

TRISTAR DEBUG UART

TP12 — PP_TRISTAR_ACC1

TP13 — PP_TRISTAR_ACC2

TRISTAR ACCESSORY ID
ACCESSORY POWER

TP14

TP15 — TRISTAR_CON_DETECT_L

## AMUX

TP16 — PMU_AMUX_AY

TP17 — PMU_AMUX_BY

## MOJAVE

TP18 — MESA_TO_BOOST_EN

TP19 — PP16V5_MESA

## LCM

TP20 — PP_LCM_BL_CAT1_CONN

TP21 — PP_LCM_BL_CAT2_CONN

TP22 — PP_LCM_BL_ANODE_CONN

## SUPER SCREW

TP23

201907-王敬恒

## N71 I2C DEVICE MAP

| I2C BUS | DEVICE | BINARY | 7-BIT HEX | 8-BIT HEX |
|---|---|---|---|---|
| I2C0 | ANTIGUA PMU | 1110100X | 0X74 | 0XE8 |
| | CHESTNUT | 0100111X | 0X27 | 0X4E |
| | MUON | 1100010X | 0X62 | 0XC4 |
| I2C1 | TIGRIS | 1110101X | 0X75 | 0XEA |
| | ARC DRIVER | 1000001X | 0X41 | 0X82 |
| | SPEAKER AMP | 1000000X | 0X40 | 0X80 |
| | TRISTAR | 0011010X | 0X1A | 0X34 |
| I2C2 | ALS | 0101001X | 0X29 | 0X52 |
| | DISP EEPROM | 1010001X | 0X51 | 0XA2 |
| OWL | UNUSED | N/A | N/A | N/A |
| ISP I2C0 | REAR CAM | TBD | TBD | TBD |
| | LED DRIVER | 1100011X | 0X63 | 0XC6 |
| ISP I2C1 | FRONT CAM | 0010000X | 0X10 | 0X20 |
| TOUCH I2C | MESON | 1000000X | 0x40 | 0x80 |
| | MAMBA | 1100000X | 0x60 | 0xC0 |
| | DOPPLER | 1011000X | 0x58 | 0xB0 |
| SEP I2C | SEP EEPROM | 1010001X | 0x51 | 0xA2 |

## BOOTSTRAPPING: BOARD REV / BOARD ID / BOOT CONFIG

| | | | |
|---|---|---|---|
| BOARD_REV3 | R0400 | 1.00K | 01005 MF 5% 1/32W |
| BOARD_REV2 | R0401 (NOSTUFF) | 1.00K | 01005 MF 5% 1/32W |
| BOARD_REV1 | R0402 (NOSTUFF) | 1.00K | 01005 MF 5% 1/32W |
| BOARD_REV0 | R0403 | 1.00K | 01005 MF 5% 1/32W |
| BOARD_ID4 | R0404 (NOSTUFF) | 1.00K | 01005 MF 5% 1/32W |
| BOARD_ID3 | R0405 (NOSTUFF) | 1.00K | 01005 MF 5% 1/32W |
| BOARD_ID2 | R0406 | 1.00K | 01005 MF 5% 1/32W |
| BOARD_ID1 | R0407 (NOSTUFF) | 1.00K | 01005 MF 5% 1/32W |
| BOARD_ID0 | R0408 (NOSTUFF) | 1.00K | 01005 MF 5% 1/32W |
| BOOT_CONFIG2 | R0409 (NOSTUFF) | 1.00K | 01005 MF 5% 1/32W |
| BOOT_CONFIG1 | R0410 | 1.00K | 01005 MF 5% 1/32W |
| BOOT_CONFIG0 | R0411 (NOSTUFF) | 1.00K | 01005 MF 5% 1/32W |

PP1V8

RESISTOR STUFF = HIGH '1'
RESISTOR NOSTUFF = LOW '0'

BOARD_REV[3:0]
FLOAT=LOW, PULLUP=HIGH

- 1111 PROTO1
- 1110 PROTO2
- 1101 EVT
- 1100 EVT DOE 3 (MAMBA LDO)
- 1011 CARRIER
- 1010 CARRIER 2 (I2C0 SCL)
- SELECTED --> 1001 DVT

BOARD_ID[4:0]
FLOAT=LOW, PULLUP=HIGH

- SELECTED --> 00100 N71 MLB
- 00101 N71 DEV
- 00110 N66 MLB

BOOT_CONFIG[2:0]
FLOAT=LOW, PULLUP=HIGH

- 000 SPI0
- 001 SPI0 TEST MODE
- 010 NVME0 x2 MODE
- 011 NVME0 x2 TEST MODE
- 100 NVME0 x1 MODE
- 101 NVME0 x1 TEST MODE
- 110 SLOW SPI0 TEST MODE
- SELECTED --> 111 FAST SPI0 TEST MODE

PAGE TITLE: SYSTEM:N71 SPECIFIC

Apple Inc.

DRAWING NUMBER: 051-1902 SIZE: D
REVISION: A.0.0
BRANCH
PAGE: 4 OF 49
SHEET: 3 OF 59

NOTICE OF PROPRIETARY PROPERTY:
THE INFORMATION CONTAINED HEREIN IS THE PROPRIETARY PROPERTY OF APPLE INC.
THE POSESSOR AGREES TO THE FOLLOWING:
I TO MAINTAIN THIS DOCUMENT IN CONFIDENCE
II NOT TO REPRODUCE OR COPY IT
III NOT TO REVEAL OR PUBLISH IT IN WHOLE OR PART
IV ALL RIGHTS RESERVED

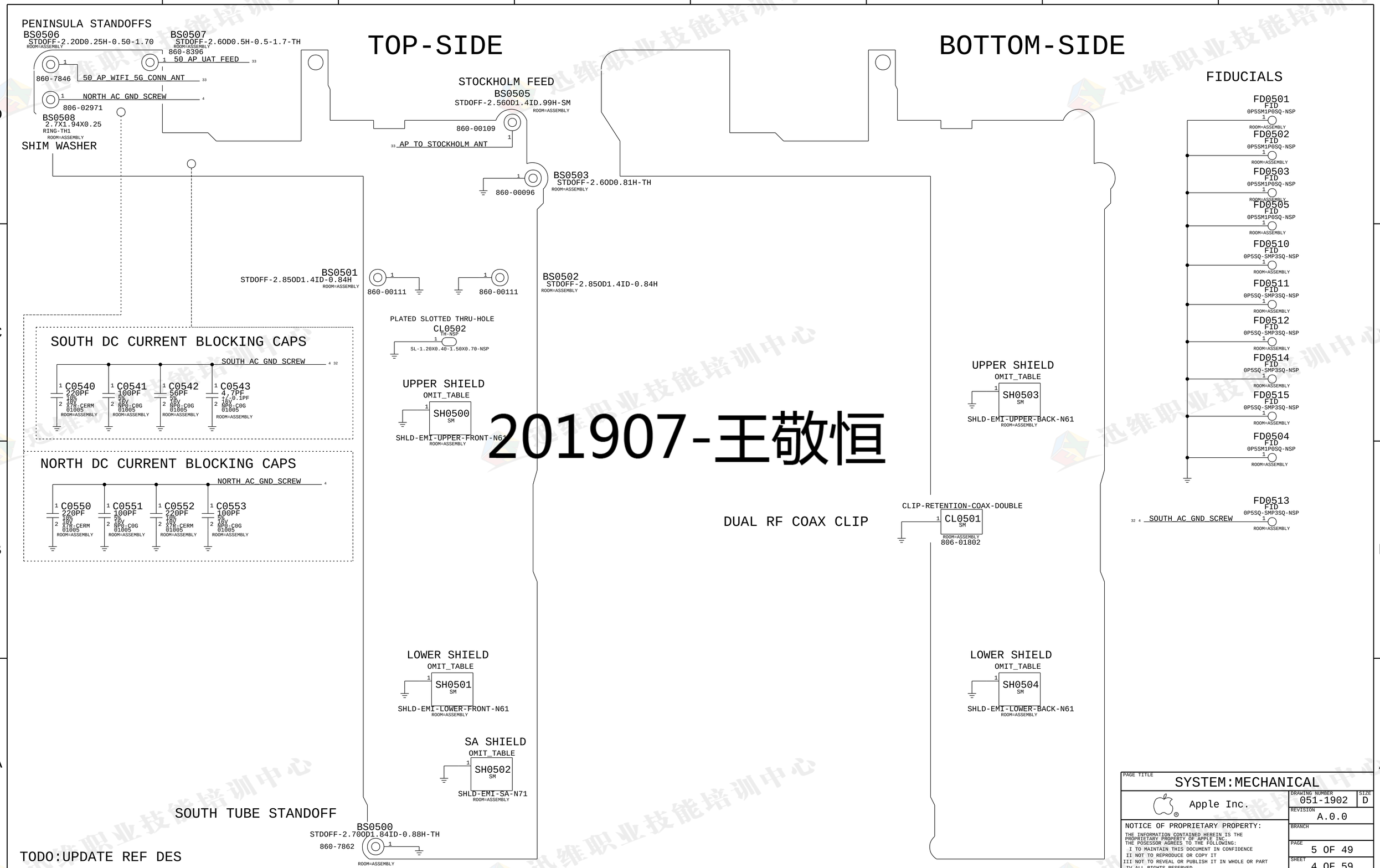
PENINSULA STANDOFFS
BS0506
STDOFF-2.20D0.25H-0.50-1.70
ROOM=ASSEMBLY
BS0507
STDOFF-2.60D0.5H-0.5-1.7-TH
ROOM=ASSEMBLY
860-8396
50_AP_UAT_FEED
860-7846
50_AP_WIFI_5G_CONN_ANT
NORTH_AC_GND_SCREW
806-02971
BS0508
2.7X1.94X0.25
RING-TH1
ROOM=ASSEMBLY
SHIM WASHER
TOP-SIDE
BOTTOM-SIDE
STOCKHOLM FEED
BS0505
STDOFF-2.56OD1.4ID.99H-SM
ROOM=ASSEMBLY
860-00109
AP_TO_STOCKHOLM_ANT
BS0503
STDOFF-2.60D0.81H-TH
ROOM=ASSEMBLY
860-00096
BS0501
STDOFF-2.85OD1.4ID-0.84H
ROOM=ASSEMBLY
860-00111
860-00111
BS0502
STDOFF-2.85OD1.4ID-0.84H
ROOM=ASSEMBLY
PLATED SLOTTED THRU-HOLE
CL0502
TH-NSP
SL-1.20X0.40-1.50X0.70-NSP
SOUTH DC CURRENT BLOCKING CAPS
SOUTH_AC_GND_SCREW
C0540 220PF 10% 16V X7R-CERM 01005 ROOM=ASSEMBLY
C0541 100PF 5% 16V NP0-C0G 01005 ROOM=ASSEMBLY
C0542 56PF 5% 16V NP0-C0G 01005 ROOM=ASSEMBLY
C0543 4.7PF +/-0.1PF 16V NP0-C0G 01005 ROOM=ASSEMBLY
UPPER SHIELD
OMIT_TABLE
SH0500
SM
SHLD-EMI-UPPER-FRONT-N61
ROOM=ASSEMBLY
NORTH DC CURRENT BLOCKING CAPS
NORTH_AC_GND_SCREW
C0550 220PF 10% 16V X7R-CERM 01005 ROOM=ASSEMBLY
C0551 100PF 5% 16V NP0-C0G 01005 ROOM=ASSEMBLY
C0552 220PF 10% 16V X7R-CERM 01005 ROOM=ASSEMBLY
C0553 100PF 5% 16V NP0-C0G 01005 ROOM=ASSEMBLY
DUAL RF COAX CLIP
CLIP-RETENTION-COAX-DOUBLE
CL0501
SM
ROOM=ASSEMBLY
806-01802
UPPER SHIELD
OMIT_TABLE
SH0503
SM
SHLD-EMI-UPPER-BACK-N61
ROOM=ASSEMBLY
FIDUCIALS
FD0501 FID 0P5SM1P0SQ-NSP ROOM=ASSEMBLY
FD0502 FID 0P5SM1P0SQ-NSP ROOM=ASSEMBLY
FD0503 FID 0P5SM1P0SQ-NSP ROOM=ASSEMBLY
FD0505 FID 0P5SM1P0SQ-NSP ROOM=ASSEMBLY
FD0510 FID 0P5SQ-SMP3SQ-NSP ROOM=ASSEMBLY
FD0511 FID 0P5SQ-SMP3SQ-NSP ROOM=ASSEMBLY
FD0512 FID 0P5SQ-SMP3SQ-NSP ROOM=ASSEMBLY
FD0514 FID 0P5SQ-SMP3SQ-NSP ROOM=ASSEMBLY
FD0515 FID 0P5SQ-SMP3SQ-NSP ROOM=ASSEMBLY
FD0504 FID 0P5SM1P0SQ-NSP ROOM=ASSEMBLY
FD0513 FID 0P5SQ-SMP3SQ-NSP ROOM=ASSEMBLY
SOUTH_AC_GND_SCREW
LOWER SHIELD
OMIT_TABLE
SH0501
SM
SHLD-EMI-LOWER-FRONT-N61
ROOM=ASSEMBLY
SA SHIELD
OMIT_TABLE
SH0502
SM
SHLD-EMI-SA-N71
ROOM=ASSEMBLY
LOWER SHIELD
OMIT_TABLE
SH0504
SM
SHLD-EMI-LOWER-BACK-N61
ROOM=ASSEMBLY
SOUTH TUBE STANDOFF
BS0500
STDOFF-2.70OD1.84ID-0.88H-TH
860-7862
ROOM=ASSEMBLY
TODO:UPDATE REF DES
PAGE TITLE
SYSTEM:MECHANICAL
Apple Inc.
DRAWING NUMBER 051-1902
SIZE D
REVISION A.0.0
BRANCH
PAGE 5 OF 49
SHEET 4 OF 59
NOTICE OF PROPRIETARY PROPERTY:
THE INFORMATION CONTAINED HEREIN IS THE PROPRIETARY PROPERTY OF APPLE INC.
THE POSESSOR AGREES TO THE FOLLOWING:
I TO MAINTAIN THIS DOCUMENT IN CONFIDENCE
II NOT TO REPRODUCE OR COPY IT
III NOT TO REVEAL OR PUBLISH IT IN WHOLE OR PART
IV ALL RIGHTS RESERVED

201907-王敬恒

# MAUI - USB, JTAG, XTAL

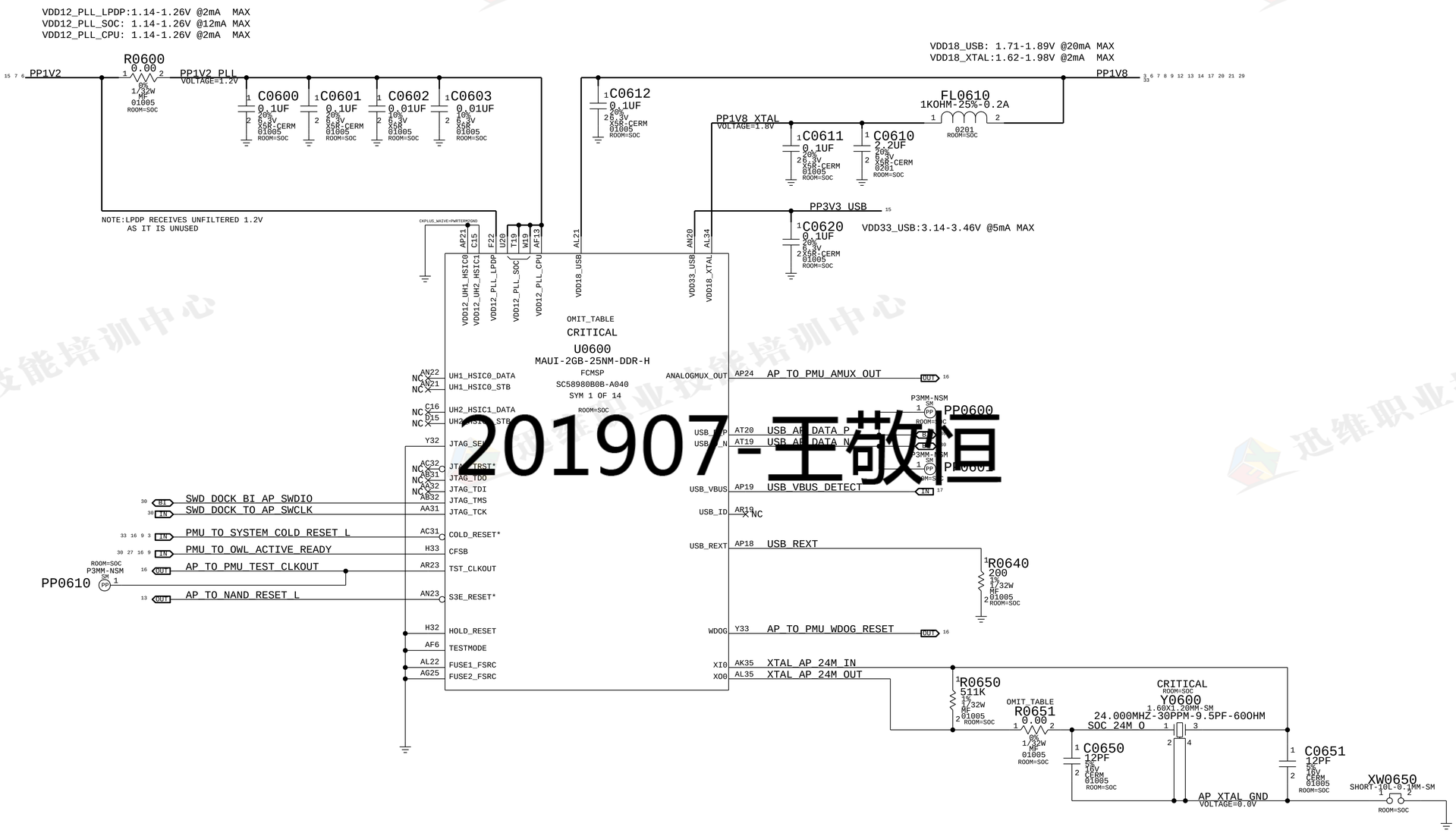


201907-王敬宜

| | |
|---|---|
| SYNC_MASTER=N/A | SYNC_DATE=N/A |
| PAGE TITLE | SOC:JTAG,USB,XTAL |
| Apple Inc. | DRAWING NUMBER 051-1902 SIZE D |
| | REVISION A.0.0 |
| NOTICE OF PROPRIETARY PROPERTY: THE INFORMATION CONTAINED HEREIN IS THE PROPRIETARY PROPERTY OF APPLE INC. THE POSESSOR AGREES TO THE FOLLOWING: I TO MAINTAIN THIS DOCUMENT IN CONFIDENCE II NOT TO REPRODUCE OR COPY IT III NOT TO REVEAL OR PUBLISH IT IN WHOLE OR PART IV ALL RIGHTS RESERVED | BRANCH |
| | PAGE 6 OF 49 |
| | SHEET 5 OF 59 |

# MAUI - PCIE INTERFACES

VDD12_PCIE_REFBUF:1.08-1.26V @50mA MAX
VDD12_PCIE_TXPLL: 1.08-1.32V @10mA MAX
VDD12_PCIE: 1.14-1.26V @115mA MAX

XW0740 SHORT-10L-0.1MM-SM ROOM=SOC — XW TO ISOLATE C0442,3 FROM C0740,1.

PP1V2 — C0740 2.2UF 20% 6.3V X5R-CERM 0201 ROOM=SOC; C0741 1.0UF 20% 6.3V X5R 0201-1 ROOM=SOC; C0742 0.1UF 20% 6.3V X5R-CERM 01005 ROOM=SOC

PP1V2_XW VOLTAGE=1.2V — C0743 0.1UF 20% 6.3V X5R-CERM 01005 ROOM=SOC; C0731 0.1UF 20% 6.3V X5R-CERM 01005 ROOM=SOC

VDD085_PCIE:0.802-TBDV @TBDmA MAX — PP_FIXED — C0752 0.1UF 20% 6.3V X5R-CERM 01005 ROOM=SOC; C0751 1.0UF 20% 6.3V X5R 0201-1 ROOM=SOC; C0750 2.2UF 20% 6.3V X5R-CERM 0201 ROOM=SOC

VDD12_PCIE: AK28, AK25, AL24, AL27
VDD12_PCIE_TXPLL: AL26
VDD12_PCIE_REFBUF: AJ26
VDD085_PCIE: AH28, AJ25, AL23, AJ29, AL29, AJ24, AK27, AJ27

OMIT_TABLE
CRITICAL
U0600
MAUI-2GB-25NM-DDR-H
FCMSP
SC58980B0B-A040
SYM 2 OF 14
ROOM=SOC

PCIE EXT C — AP29 PCIE_EXT_C

## PCIE LINK 0

| | | | | |
|---|---|---|---|---|
| PCIE NAND TO AP RXD0 P (IN) | C0701 0.1UF | PCIE NAND TO AP RXD0 C P | AM30 | PCIE_RX0_P |
| PCIE NAND TO AP RXD0 N (IN) | C0702 0.1UF | PCIE NAND TO AP RXD0 C N | AN30 | PCIE_RX0_N |
| PCIE AP TO NAND TXD0 P (OUT) | C0703 0.1UF | PCIE AP TO NAND TXD0 C P | AT32 | PCIE_TX0_P |
| PCIE AP TO NAND TXD0 N (OUT) | C0704 0.1UF | PCIE AP TO NAND TXD0 C N | AR32 | PCIE_TX0_N |
| PCIE NAND TO AP RXD1 P (IN) | C0705 0.1UF | PCIE NAND TO AP RXD1 C P | AM28 | PCIE_RX1_P |
| PCIE NAND TO AP RXD1 N (IN) | C0706 0.1UF | PCIE NAND TO AP RXD1 C N | AN28 | PCIE_RX1_N |
| PCIE AP TO NAND TXD1 P (OUT) | C0707 0.1UF | PCIE AP TO NAND TXD1 C P | AT31 | PCIE_TX1_P |
| PCIE AP TO NAND TXD1 N (OUT) | C0708 0.1UF | PCIE AP TO NAND TXD1 C N | AR31 | PCIE_TX1_N |

## PCIE LINK 1

| | | | | |
|---|---|---|---|---|
| PCIE WLAN TO AP RXD P (IN) | C0709 0.1UF | PCIE WLAN TO AP RXD C P | AM27 | PCIE_RX2_P |
| PCIE WLAN TO AP RXD N (IN) | C0710 0.1UF | PCIE WLAN TO AP RXD C N | AN27 | PCIE_RX2_N |
| PCIE AP TO WLAN TXD P (OUT) | C0711 0.1UF | PCIE AP TO WLAN TXD C P | AT28 | PCIE_TX2_P |
| PCIE AP TO WLAN TXD N (OUT) | C0712 0.1UF | PCIE AP TO WLAN TXD C N | AR28 | PCIE_TX2_N |

## PCIE LINK 2

| | | | | |
|---|---|---|---|---|
| PCIE BB TO AP RXD P (IN) | C0715 0.1UF | PCIE BB TO AP RXD C P | AM26 | PCIE_RX3_P |
| PCIE BB TO AP RXD N (IN) | C0716 0.1UF | PCIE BB TO AP RXD C N | AN26 | PCIE_RX3_N |
| PCIE AP TO BB TXD P (OUT) | C0717 0.1UF | PCIE AP TO BB TXD C P | AT26 | PCIE_TX3_P |
| PCIE AP TO BB TXD N (OUT) | C0718 0.1UF | PCIE AP TO BB TXD C N | AR26 | PCIE_TX3_N |

| | | |
|---|---|---|
| NC | AM25 | PCIE_RX4_P |
| NC | AN25 | PCIE_RX4_N |
| NC | AR24 | PCIE_TX4_P |
| NC | AT24 | PCIE_TX4_N |

| | | | |
|---|---|---|---|
| PCIE_REF_CLK0_P | AN35 | PCIE AP TO NAND REFCLK P | OUT |
| PCIE_REF_CLK0_N | AP35 | PCIE AP TO NAND REFCLK N | OUT |
| PCIE_REF_CLK1_P | AN34 | PCIE AP TO WLAN REFCLK P | OUT |
| PCIE_REF_CLK1_N | AP34 | PCIE AP TO WLAN REFCLK N | OUT |
| PCIE_REF_CLK2_P | AM32 | PCIE AP TO BB REFCLK P | OUT |
| PCIE_REF_CLK2_N | AN32 | PCIE AP TO BB REFCLK N | OUT |
| PCIE_REF_CLK3_P | AM31 | NC | |
| PCIE_REF_CLK3_N | AN31 | NC | |

PP1V8 — R0720 100K 5% 1/32W MF 01005 ROOM=SOC; R0721 100K 5% 1/32W MF 01005 ROOM=SOC; R0722 100K 5% 1/32W MF 01005 ROOM=SOC (NOSTUFF)

| | | | |
|---|---|---|---|
| PCIE_CLKREQ0* | AT11 | PCIE NAND TO AP CLKREQ L | BI |
| PCIE_CLKREQ1* | AP12 | PCIE WLAN TO AP CLKREQ L | BI |
| PCIE_CLKREQ2* | AR12 | PCIE BB BI AP CLKREQ L | BI |
| PCIE_CLKREQ3* | AT12 | NC | |

NOTE:CLKREQ_L PULL-UP FOR BB IN RADIO_MLB_MIMO SECTION

| | | | |
|---|---|---|---|
| PCIE_PERST0* | AR0 | PCIE AP TO NAND RESET L | OUT |
| PCIE_PERST1* | AT0 | PCIE AP TO WLAN RESET L | OUT |
| PCIE_PERST2* | AP11 | PCIE AP TO BB RESET L | OUT |
| PCIE_PERST3* | AR11 | NC | |

R0700 100K 5% 1/32W MF 01005 ROOM=SOC; R0701 100K 5% 1/32W MF 01005 ROOM=SOC; R0702 100K 5% 1/32W MF 01005 ROOM=SOC

| | | |
|---|---|---|
| PCIE_EXT_REF_CLK_P | AR33 | |
| PCIE_EXT_REF_CLK_N | AT33 | |
| PCIE_RX_TX_BYPASS_CLK_P | AT29 | |
| PCIE_RX_TX_BYPASS_CLK_N | AR29 | |
| PCIE_RCAL_P | AT30 | PCIE RCAL P |
| PCIE_RCAL_N | AR30 | PCIE RCAL N |

OMIT_TABLE R0730 100 1% 1/32W MF 01005 ROOM=SOC; OMIT_TABLE C0730 100PF 5% 16V NP0-C0G 01005 ROOM=SOC

201907-王敬恒

SYNC_MASTER=N/A SYNC_DATE=N/A

PAGE TITLE: SOC:PCIE

Apple Inc.

DRAWING NUMBER: 051-1902 SIZE: D
REVISION: A.0.0
BRANCH:
PAGE: 7 OF 49
SHEET: 6 OF 59

NOTICE OF PROPRIETARY PROPERTY:
THE INFORMATION CONTAINED HEREIN IS THE PROPRIETARY PROPERTY OF APPLE INC.
THE POSESSOR AGREES TO THE FOLLOWING:
I TO MAINTAIN THIS DOCUMENT IN CONFIDENCE
II NOT TO REPRODUCE OR COPY IT
III NOT TO REVEAL OR PUBLISH IT IN WHOLE OR PART
IV ALL RIGHTS RESERVED

# MAUI - CAMERA & DISPLAY INTERFACES

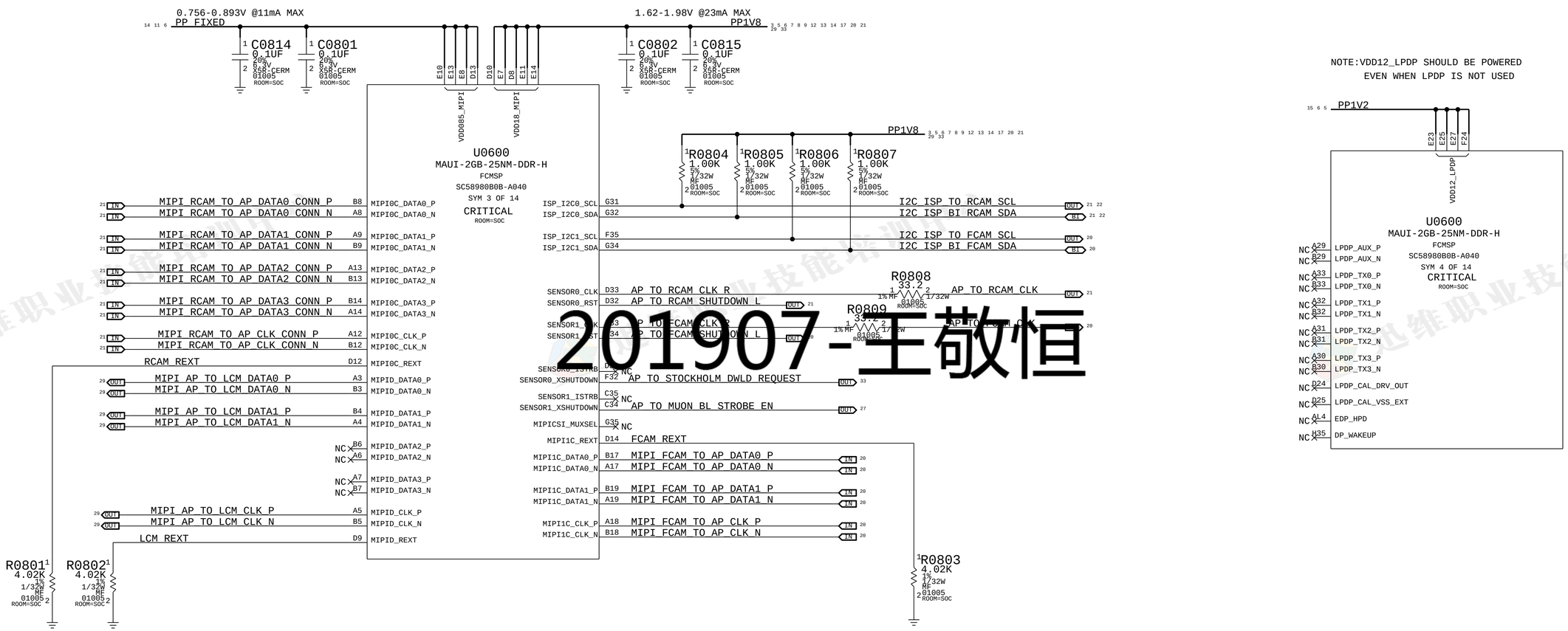


NOTE:VDD12_LPDP SHOULD BE POWERED
EVEN WHEN LPDP IS NOT USED




201907-王敬恒

SYNC_MASTER=N/A SYNC_DATE=N/A

PAGE TITLE
SOC:CAMERA & DISPLAY

Apple Inc.

DRAWING NUMBER 051-1902 SIZE D
REVISION A.0.0
BRANCH
PAGE 8 OF 49
SHEET 7 OF 59

NOTICE OF PROPRIETARY PROPERTY:
THE INFORMATION CONTAINED HEREIN IS THE PROPRIETARY PROPERTY OF APPLE INC.
THE POSESSOR AGREES TO THE FOLLOWING:
I TO MAINTAIN THIS DOCUMENT IN CONFIDENCE
II NOT TO REPRODUCE OR COPY IT
III NOT TO REVEAL OR PUBLISH IT IN WHOLE OR PART
IV ALL RIGHTS RESERVED

# MAUI - GPIO & SERIAL INTERFACES

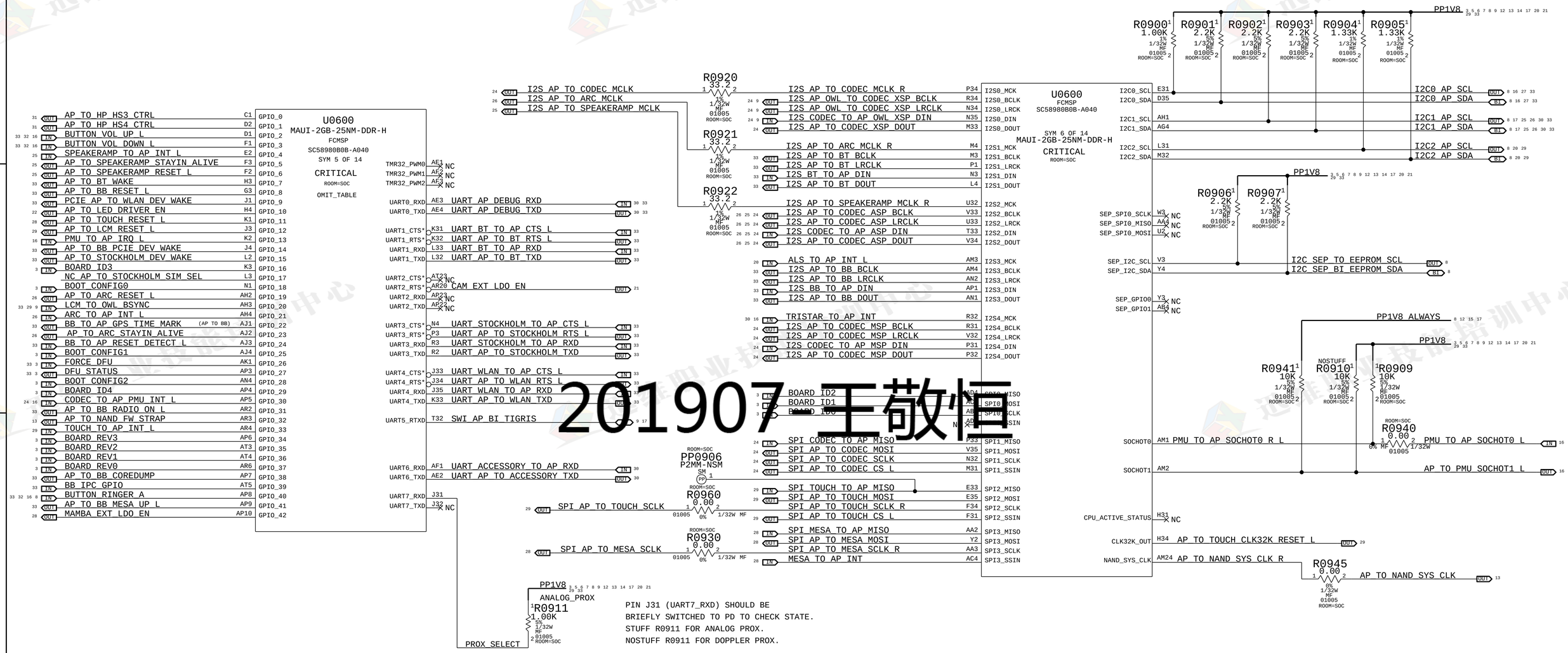


201907 王敬恒

## ANTI-ROLLBACK EEPROM

128kbit

APN:335S0946

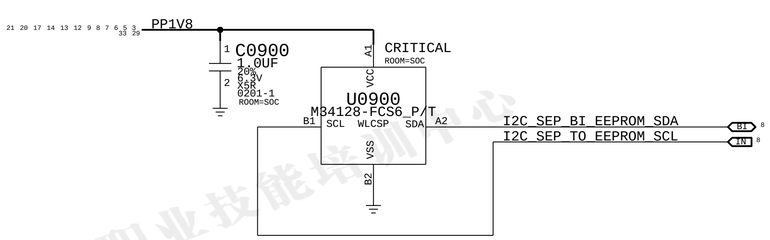


## BUTTON PULL-UP RESISTORS

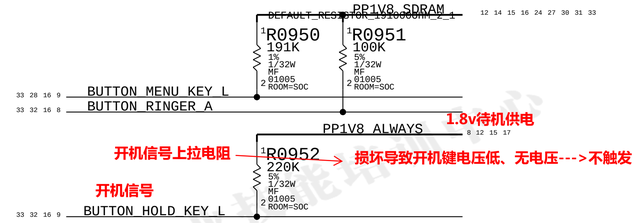


## I2C PROBE POINTS

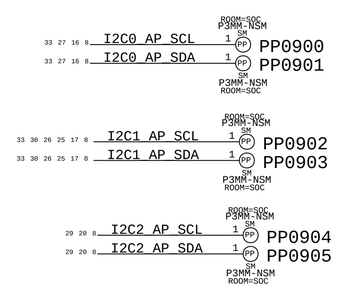


SYNC_MASTER=N/A SYNC_DATE=N/A

PAGE TITLE

**SOC:SERIAL & GPIO**

Apple Inc.

DRAWING NUMBER 051-1902 SIZE D

REVISION A.0.0

BRANCH

PAGE 9 OF 49

SHEET 8 OF 59

NOTICE OF PROPRIETARY PROPERTY:
THE INFORMATION CONTAINED HEREIN IS THE PROPRIETARY PROPERTY OF APPLE INC.
THE POSESSOR AGREES TO THE FOLLOWING:
I TO MAINTAIN THIS DOCUMENT IN CONFIDENCE
II NOT TO REPRODUCE OR COPY IT
III NOT TO REVEAL OR PUBLISH IT IN WHOLE OR PART
IV ALL RIGHTS RESERVED

# MAUI - OWL

## POWER STATE CONTROL PROBE POINTS

30 27 16 9 5 PMU_TO_OWL_ACTIVE_READY — ROOM=SOC P3MM-NSM SM PP1021

16 11 9 PMU_TO_OWL_SLEEP1_READY — ROOM=SOC P3MM-NSM SM PP1023

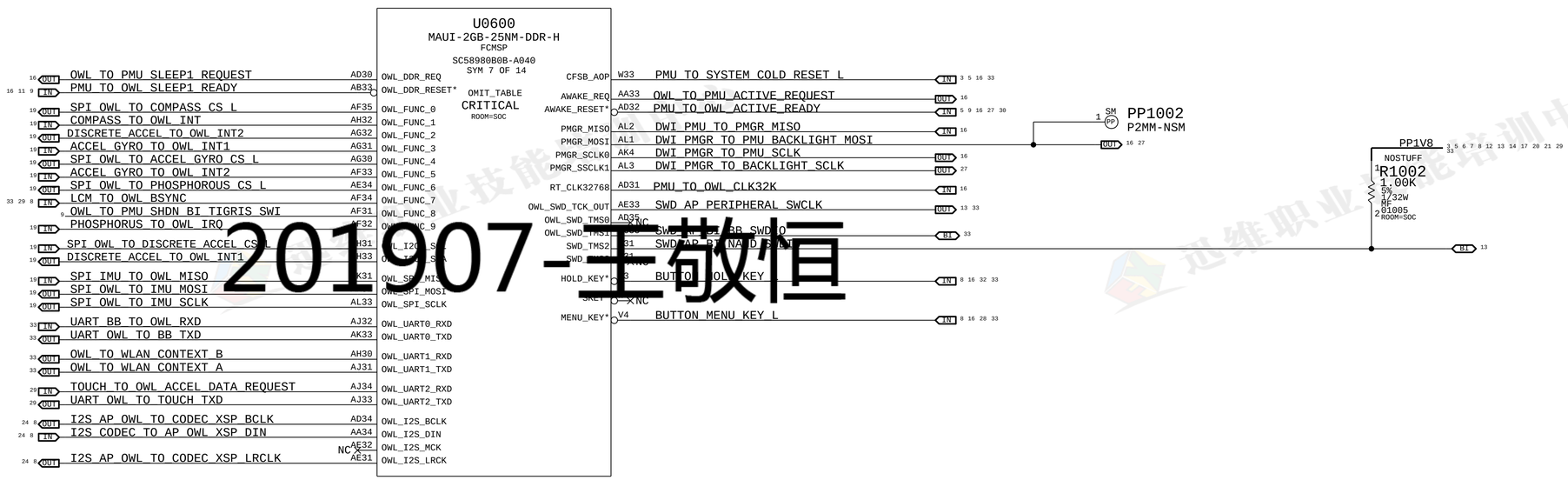


## OWL SYSTEM SHUTDOWN OPTION

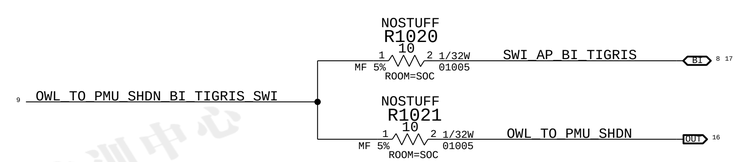


SYNC_MASTER=N/A SYNC_DATE=N/A

PAGE TITLE: SOC:OWL

Apple Inc.

DRAWING NUMBER: 051-1902 SIZE: D

REVISION: A.0.0

BRANCH:

PAGE: 10 OF 49

SHEET: 9 OF 59

NOTICE OF PROPRIETARY PROPERTY:
THE INFORMATION CONTAINED HEREIN IS THE PROPRIETARY PROPERTY OF APPLE INC.
THE POSESSOR AGREES TO THE FOLLOWING:
I TO MAINTAIN THIS DOCUMENT IN CONFIDENCE
II NOT TO REPRODUCE OR COPY IT
III NOT TO REVEAL OR PUBLISH IT IN WHOLE OR PART
IV ALL RIGHTS RESERVED

201907-王敬恒

# MAUI - CPU, GPU & SOC RAILS

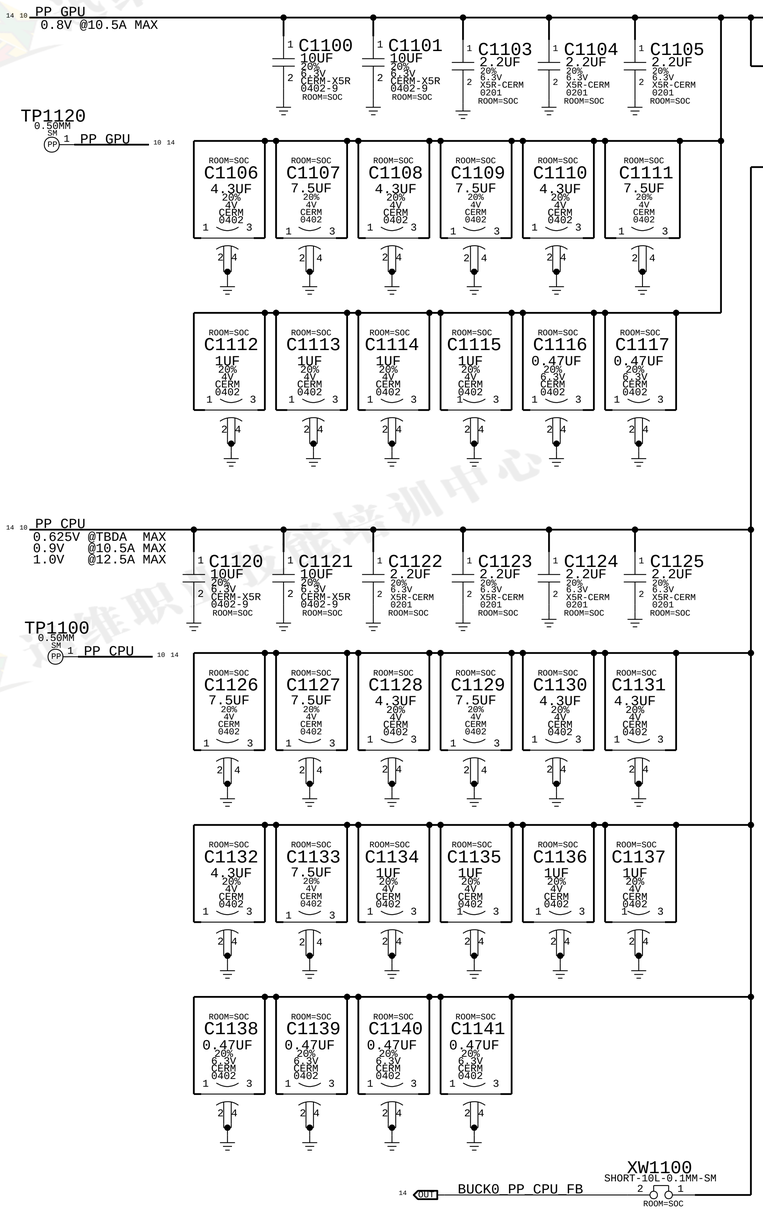


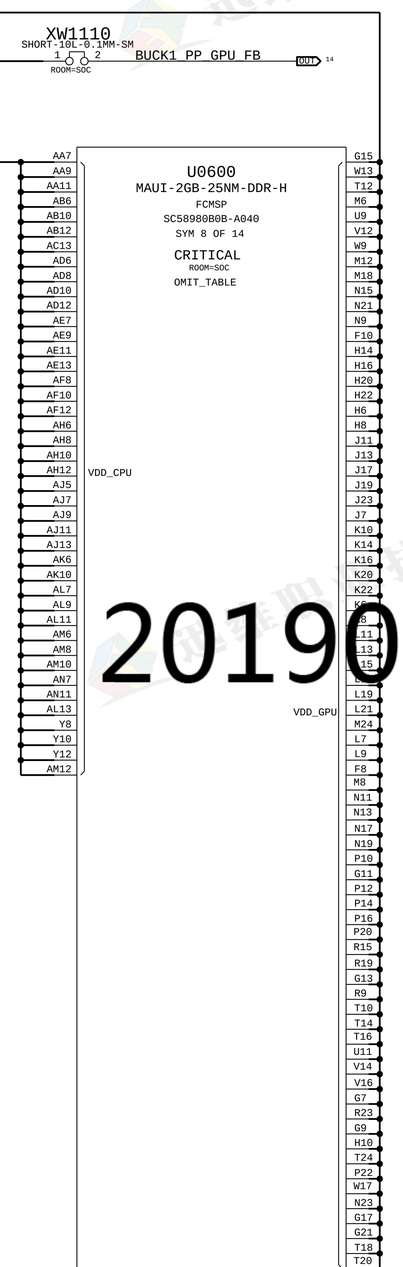


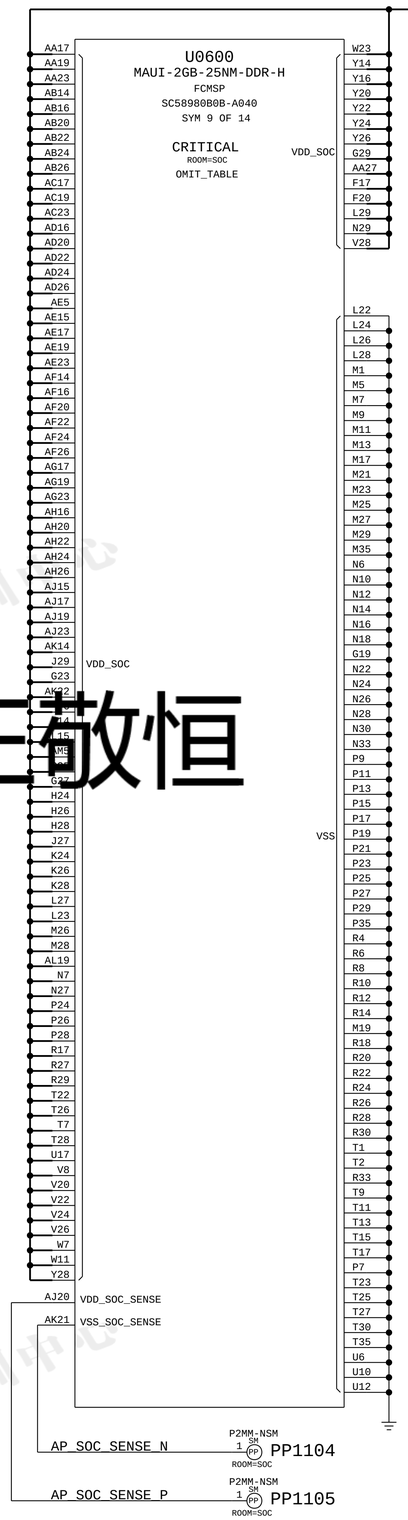


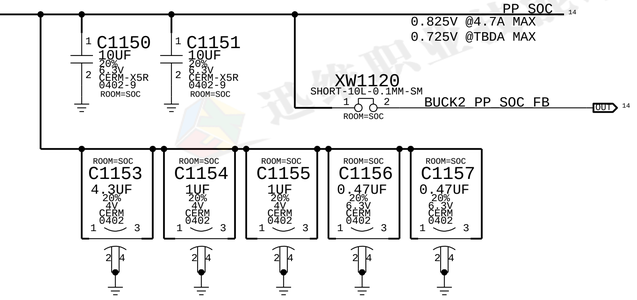


NOTE:AP_GPU_SENSE_P PROBE LOCATION @ R2205.2

201907-王敬恒

SYNC_MASTER=N/A SYNC_DATE=N/A

PAGE TITLE: SOC:POWER (1/3)

Apple Inc.

DRAWING NUMBER: 051-1902 SIZE: D

REVISION: A.0.0

BRANCH

PAGE: 11 OF 49

SHEET: 10 OF 59

NOTICE OF PROPRIETARY PROPERTY:
THE INFORMATION CONTAINED HEREIN IS THE PROPRIETARY PROPERTY OF APPLE INC.
THE POSESSOR AGREES TO THE FOLLOWING:
I TO MAINTAIN THIS DOCUMENT IN CONFIDENCE
II NOT TO REPRODUCE OR COPY IT
III NOT TO REVEAL OR PUBLISH IT IN WHOLE OR PART
IV ALL RIGHTS RESERVED

# MAUI - POWER SUPPLIES

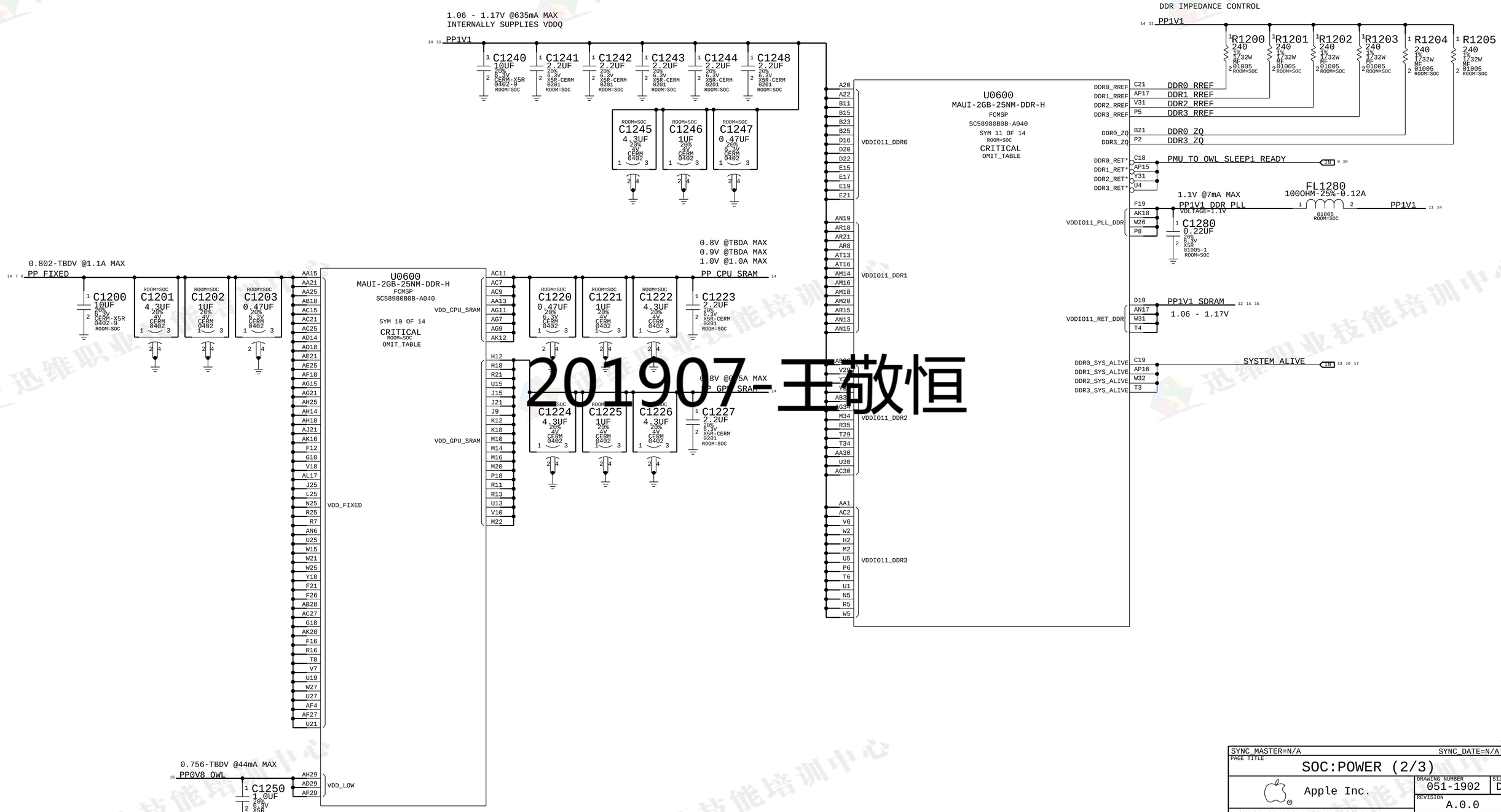


201907-王敬恒

SYNC_MASTER=N/A SYNC_DATE=N/A

PAGE TITLE
SOC:POWER (2/3)

Apple Inc.

DRAWING NUMBER 051-1902 SIZE D
REVISION A.0.0
BRANCH
PAGE 12 OF 49
SHEET 11 OF 59

NOTICE OF PROPRIETARY PROPERTY:
THE INFORMATION CONTAINED HEREIN IS THE PROPRIETARY PROPERTY OF APPLE INC.
THE POSESSOR AGREES TO THE FOLLOWING:
I TO MAINTAIN THIS DOCUMENT IN CONFIDENCE
II NOT TO REPRODUCE OR COPY IT
III NOT TO REVEAL OR PUBLISH IT IN WHOLE OR PART
IV ALL RIGHTS RESERVED

# MAUI - POWER SUPPLIES

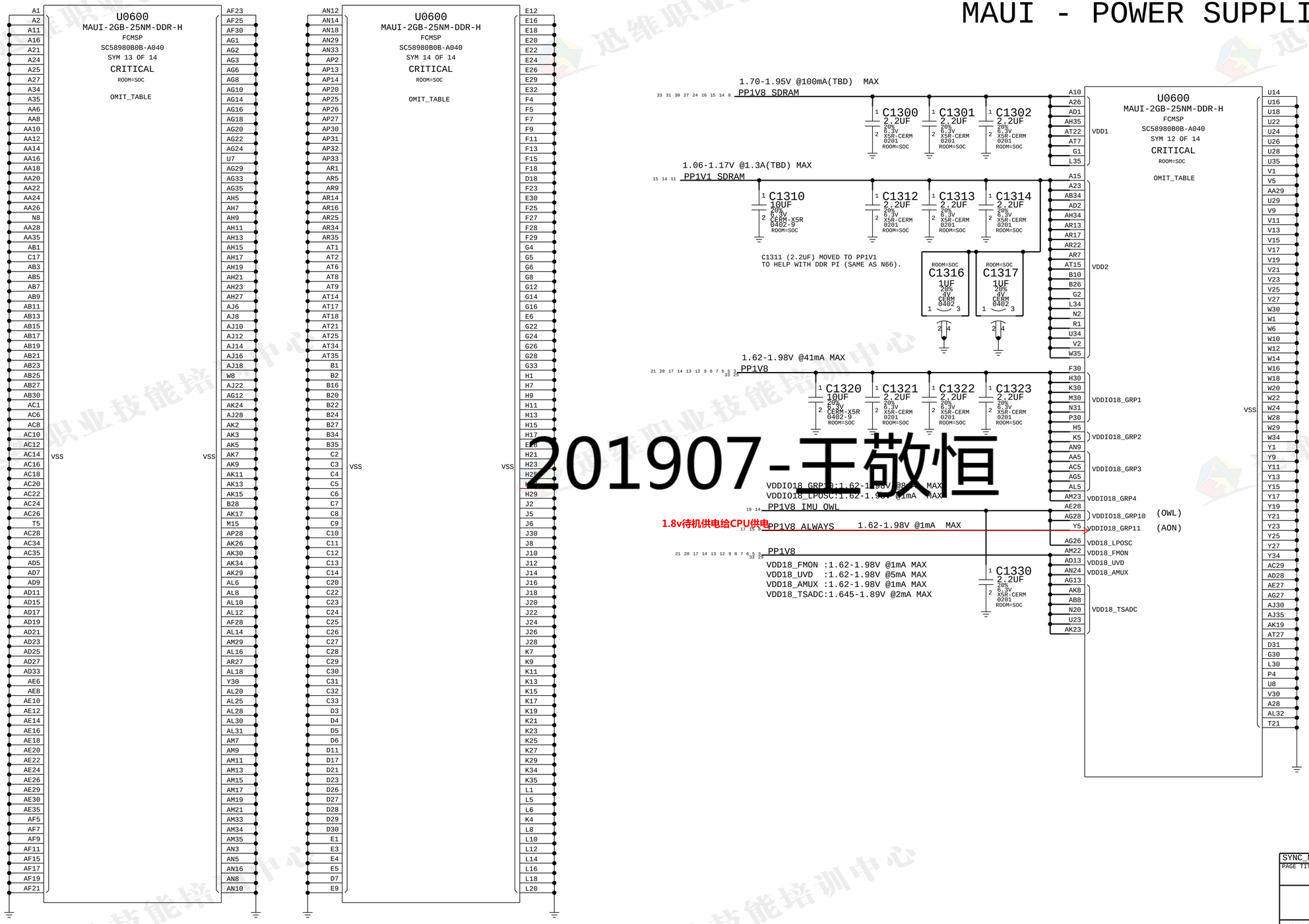


201907-王敬恒

SYNC_MASTER=N/A SYNC_DATE=N/A

PAGE TITLE
SOC:POWER (3/3)

Apple Inc.

DRAWING NUMBER 051-1902 SIZE D
REVISION A.0.0
BRANCH
PAGE 13 OF 49
SHEET 12 OF 59

NOTICE OF PROPRIETARY PROPERTY:
THE INFORMATION CONTAINED HEREIN IS THE PROPRIETARY PROPERTY OF APPLE INC.
THE POSESSOR AGREES TO THE FOLLOWING:
I TO MAINTAIN THIS DOCUMENT IN CONFIDENCE
II NOT TO REPRODUCE OR COPY IT
III NOT TO REVEAL OR PUBLISH IT IN WHOLE OR PART
IV ALL RIGHTS RESERVED

# S3E NAND

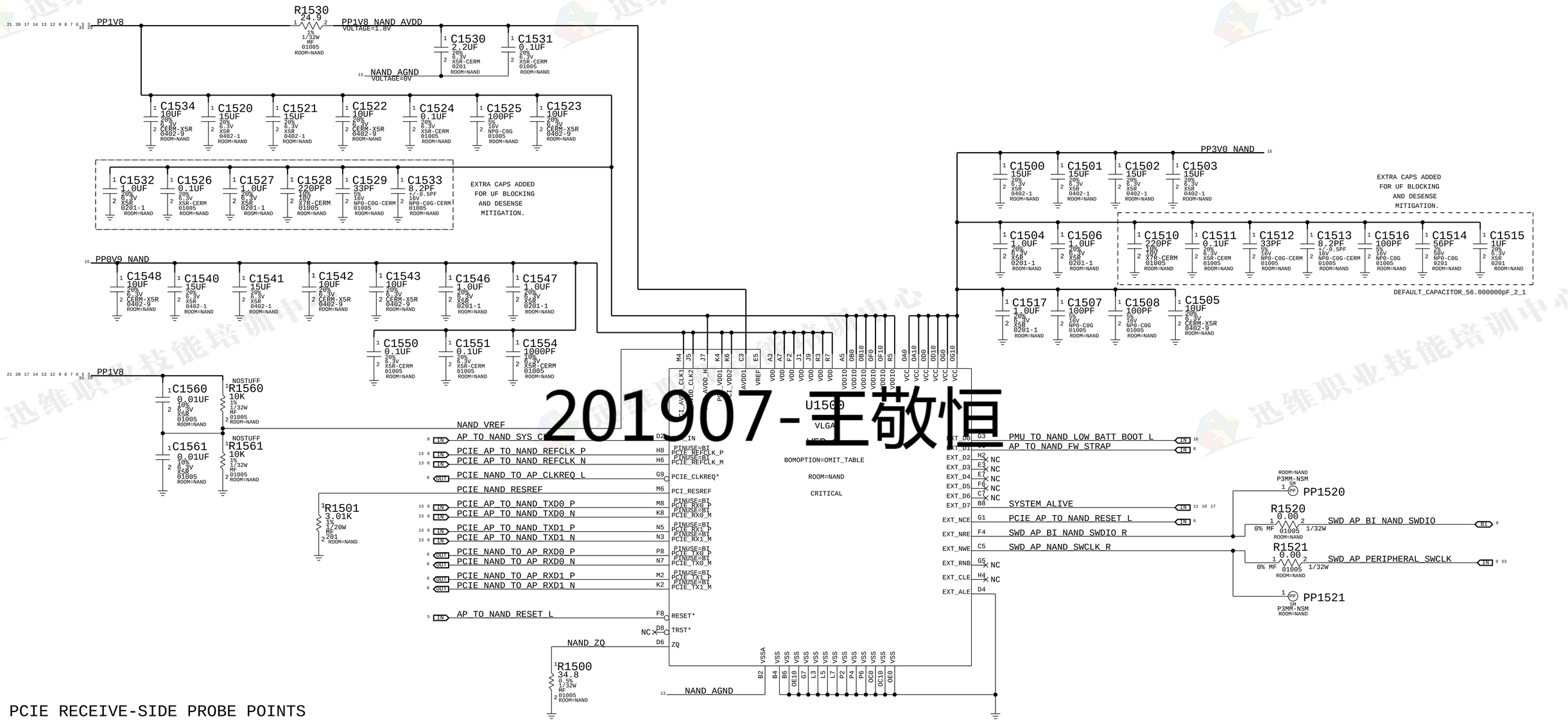


201907-王敬恒

## PCIE RECEIVE-SIDE PROBE POINTS

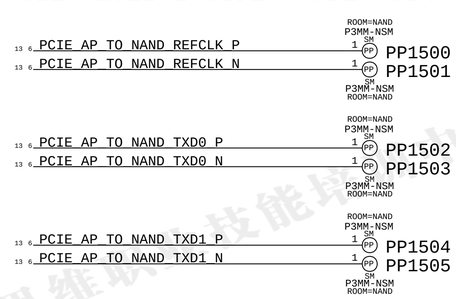


| | |
|---|---|
| SYNC_MASTER=N/A | SYNC_DATE=N/A |
| PAGE TITLE: NAND | |
| Apple Inc. | DRAWING NUMBER: 051-1902 SIZE: D |
| | REVISION: A.0.0 |
| NOTICE OF PROPRIETARY PROPERTY: THE INFORMATION CONTAINED HEREIN IS THE PROPRIETARY PROPERTY OF APPLE INC. THE POSESSOR AGREES TO THE FOLLOWING: I TO MAINTAIN THIS DOCUMENT IN CONFIDENCE II NOT TO REPRODUCE OR COPY IT III NOT TO REVEAL OR PUBLISH IT IN WHOLE OR PART IV ALL RIGHTS RESERVED | BRANCH: |
| | PAGE: 15 OF 49 |
| | SHEET: 13 OF 59 |

# ANTIGUA PMU - Buck Supplies

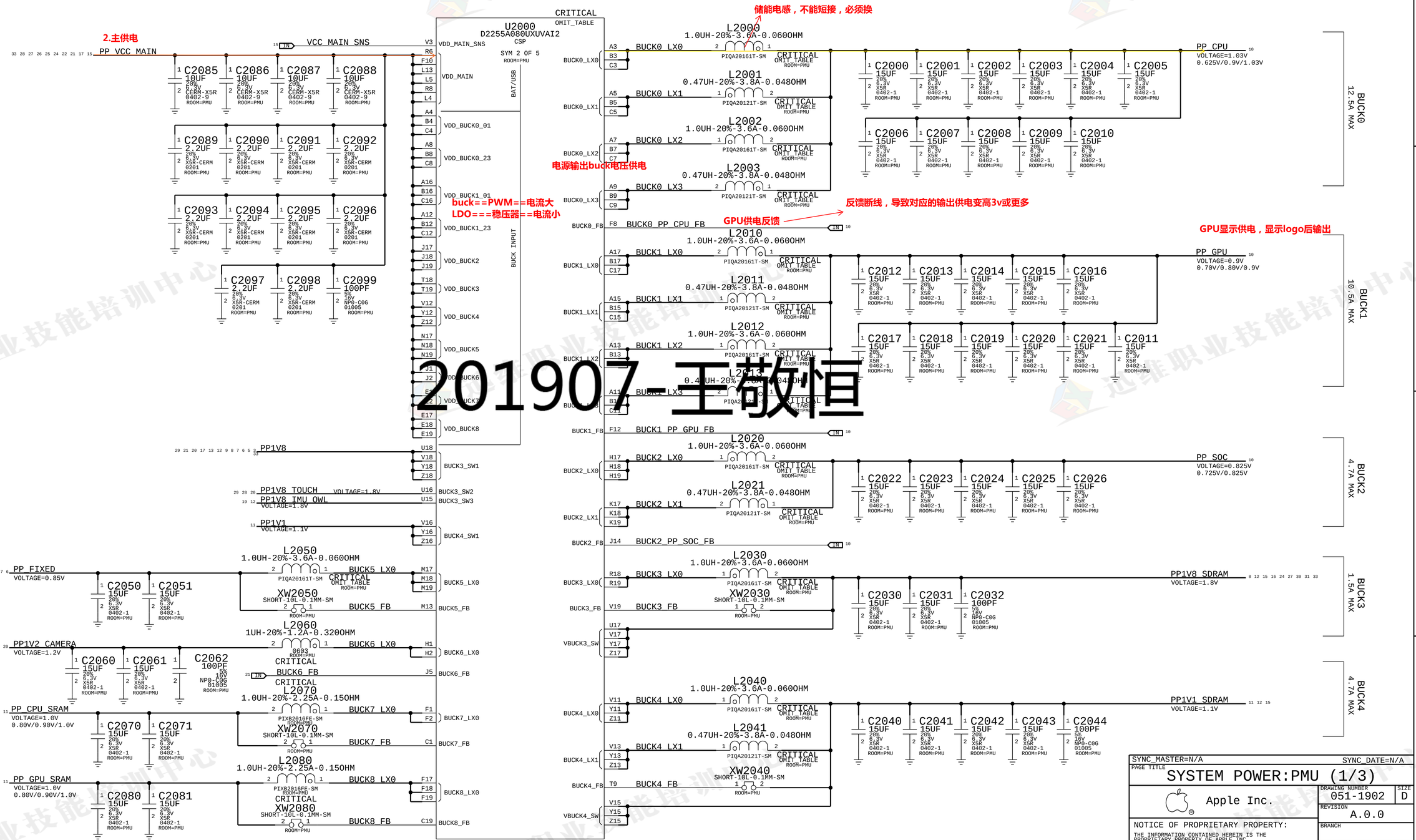


201907-王敬恒

SYNC_MASTER=N/A SYNC_DATE=N/A

PAGE TITLE
SYSTEM POWER:PMU (1/3)

Apple Inc.

DRAWING NUMBER 051-1902 SIZE D
REVISION A.0.0
BRANCH
PAGE 20 OF 49
SHEET 14 OF 59

NOTICE OF PROPRIETARY PROPERTY:
THE INFORMATION CONTAINED HEREIN IS THE PROPRIETARY PROPERTY OF APPLE INC.
THE POSESSOR AGREES TO THE FOLLOWING:
I TO MAINTAIN THIS DOCUMENT IN CONFIDENCE
II NOT TO REPRODUCE OR COPY IT
III NOT TO REVEAL OR PUBLISH IT IN WHOLE OR PART
IV ALL RIGHTS RESERVED

# ANTIGUA PMU - LDOs

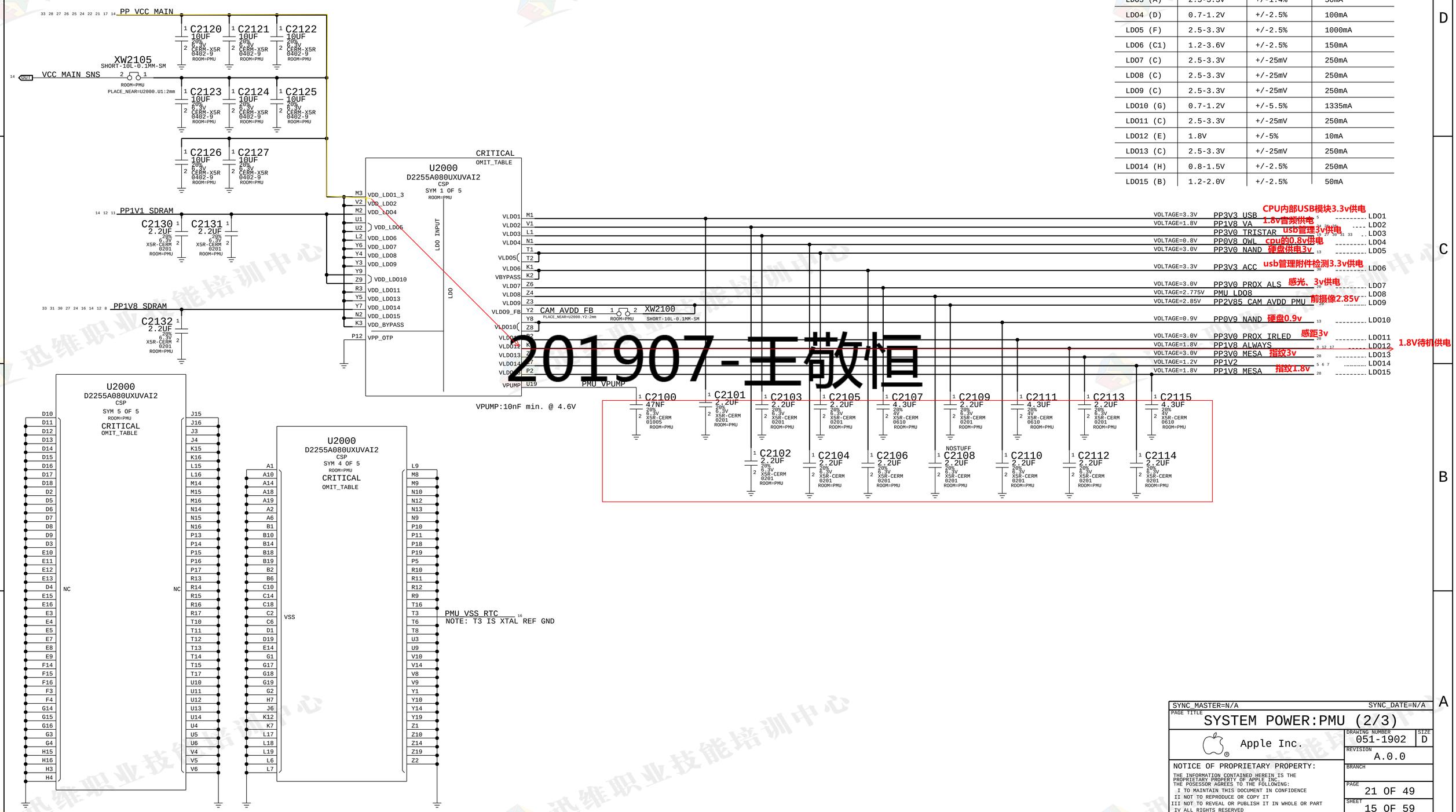


## ANTIGUA LDO SPECS

| LDO# | ADJ.RANGE | ACCURACY | MAX.CURRENT |
|---|---|---|---|
| LDO1 (A) | 2.5-3.3V | +/-1.4% | 50mA |
| LDO2 (B) | 1.2-2.0V | +/-2.5% | 50mA |
| LDO3 (A) | 2.5-3.3V | +/-1.4% | 50mA |
| LDO4 (D) | 0.7-1.2V | +/-2.5% | 100mA |
| LDO5 (F) | 2.5-3.3V | +/-2.5% | 1000mA |
| LDO6 (C1) | 1.2-3.6V | +/-2.5% | 150mA |
| LDO7 (C) | 2.5-3.3V | +/-25mV | 250mA |
| LDO8 (C) | 2.5-3.3V | +/-25mV | 250mA |
| LDO9 (C) | 2.5-3.3V | +/-25mV | 250mA |
| LDO10 (G) | 0.7-1.2V | +/-5.5% | 1335mA |
| LDO11 (C) | 2.5-3.3V | +/-25mV | 250mA |
| LDO12 (E) | 1.8V | +/-5% | 10mA |
| LDO13 (C) | 2.5-3.3V | +/-25mV | 250mA |
| LDO14 (H) | 0.8-1.5V | +/-2.5% | 250mA |
| LDO15 (B) | 1.2-2.0V | +/-2.5% | 50mA |

201907-王敬恒

SYNC_MASTER=N/A SYNC_DATE=N/A

PAGE TITLE
SYSTEM POWER:PMU (2/3)

Apple Inc.

DRAWING NUMBER 051-1902 SIZE D
REVISION A.0.0
BRANCH
PAGE 21 OF 49
SHEET 15 OF 59

NOTICE OF PROPRIETARY PROPERTY:
THE INFORMATION CONTAINED HEREIN IS THE PROPRIETARY PROPERTY OF APPLE INC.
THE POSESSOR AGREES TO THE FOLLOWING:
I TO MAINTAIN THIS DOCUMENT IN CONFIDENCE
II NOT TO REPRODUCE OR COPY IT
III NOT TO REVEAL OR PUBLISH IT IN WHOLE OR PART
IV ALL RIGHTS RESERVED

# ANTIGUA PMU - GPIOs, NTCs

CONTROL PIN NOTES:

NOTE (1):INPUT PULL-DOWN 100-300k
NOTE (2):INPUT PULL-DOWN 1M
NOTE (3):INPUT PULL-UP OR DOWN 100k-300k
NOTE (4):OUTPUT OPEN-DRAIN, REQUIRES PULL-UP

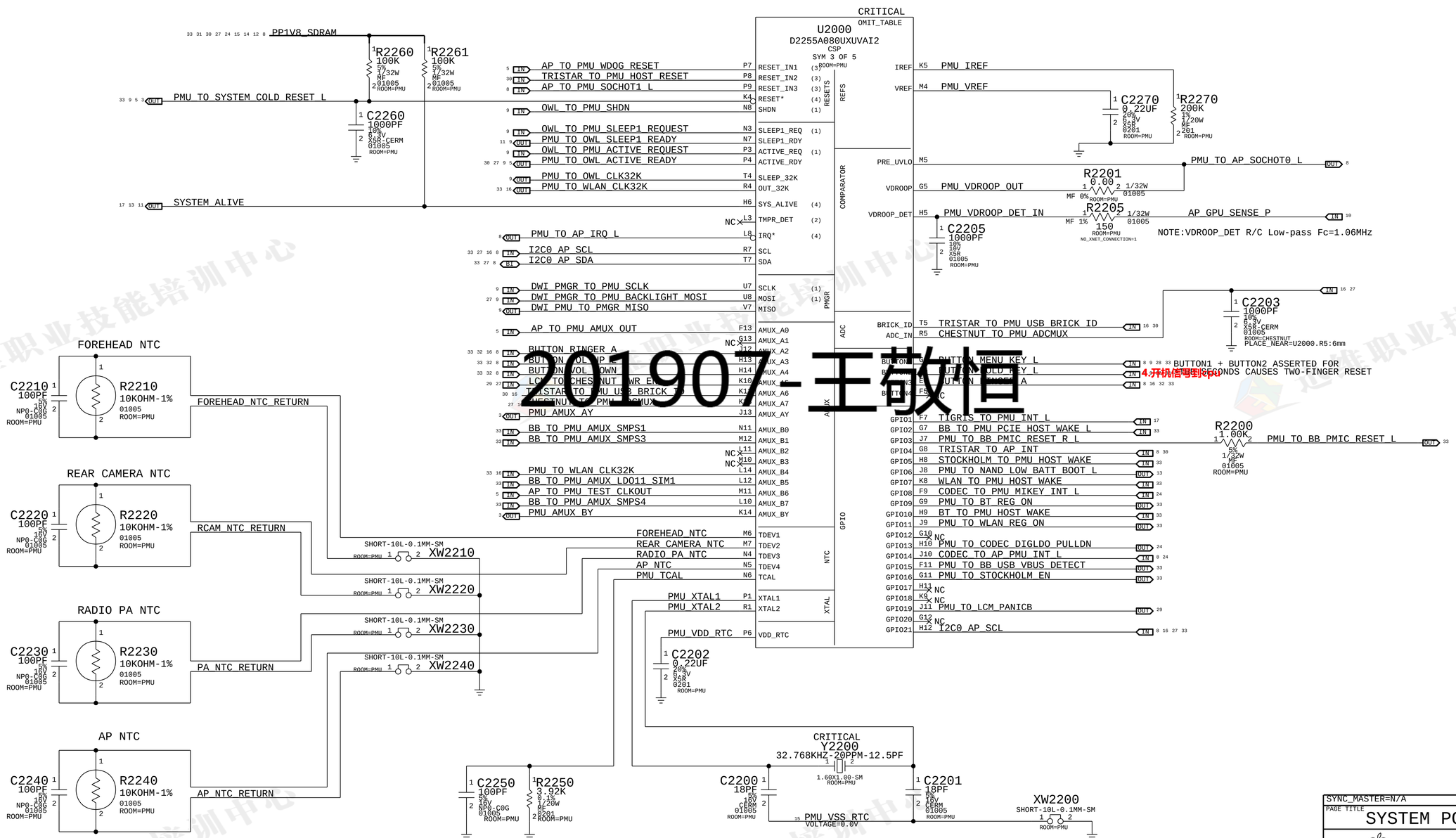


NOTE:100PF CAPS ARE THE SAMPLING CAPS FOR PMU ADC

201907-王敬恒
4.开机信号到cpu

SYNC_MASTER=N/A SYNC_DATE=N/A

PAGE TITLE
SYSTEM POWER:PMU (3/3)

Apple Inc.

DRAWING NUMBER 051-1902 SIZE D
REVISION A.0.0
BRANCH
PAGE 22 OF 49
SHEET 16 OF 59

NOTICE OF PROPRIETARY PROPERTY:
THE INFORMATION CONTAINED HEREIN IS THE PROPRIETARY PROPERTY OF APPLE INC.
THE POSESSOR AGREES TO THE FOLLOWING:
I TO MAINTAIN THIS DOCUMENT IN CONFIDENCE
II NOT TO REPRODUCE OR COPY IT
III NOT TO REVEAL OR PUBLISH IT IN WHOLE OR PART
IV ALL RIGHTS RESERVED

# TIGRIS CHARGER

APN:343S00033

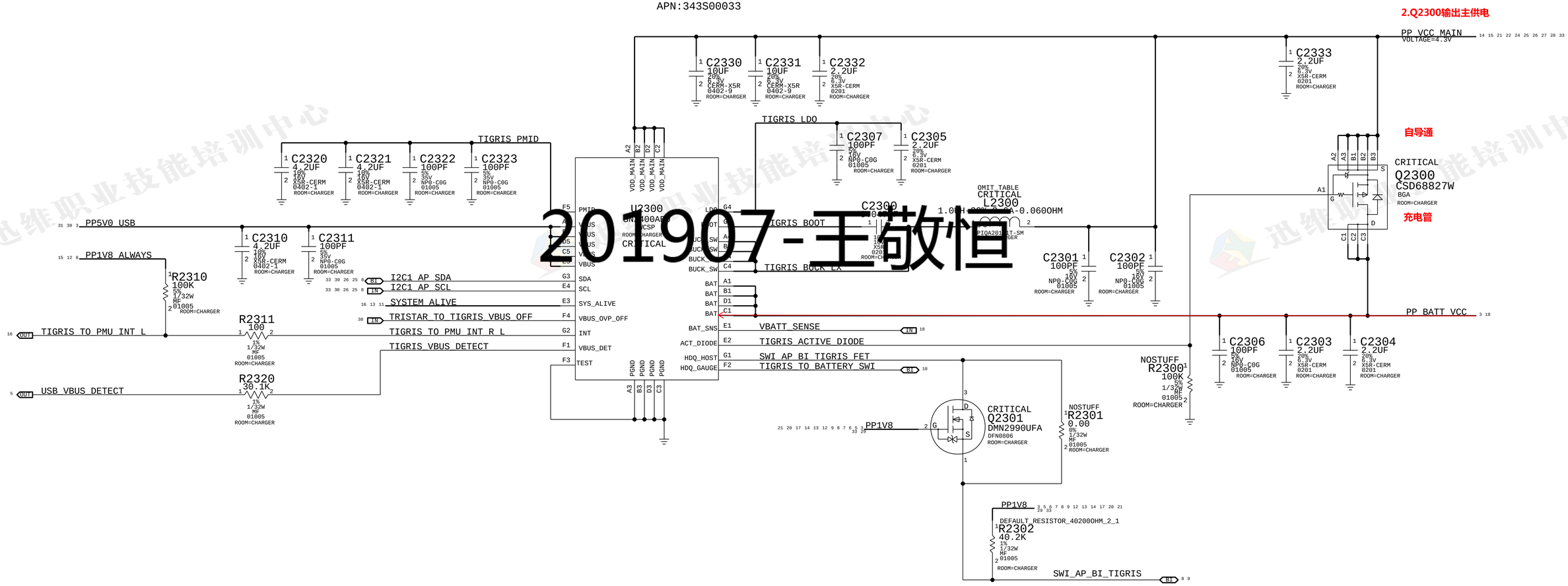


201907-王敬恒

SYNC_MASTER=N/A SYNC_DATE=N/A

PAGE TITLE
SYSTEM POWER:CHARGER

Apple Inc.

DRAWING NUMBER 051-1902 SIZE D
REVISION A.0.0
BRANCH
PAGE 23 OF 49
SHEET 17 OF 59

NOTICE OF PROPRIETARY PROPERTY:
THE INFORMATION CONTAINED HEREIN IS THE PROPRIETARY PROPERTY OF APPLE INC.
THE POSESSOR AGREES TO THE FOLLOWING:
I TO MAINTAIN THIS DOCUMENT IN CONFIDENCE
II NOT TO REPRODUCE OR COPY IT
III NOT TO REVEAL OR PUBLISH IT IN WHOLE OR PART
IV ALL RIGHTS RESERVED

# BATTERY CONNECTOR

THIS ONE ON MLB ---> 516S00104 (RCPT)
516S00105 (PLUG)

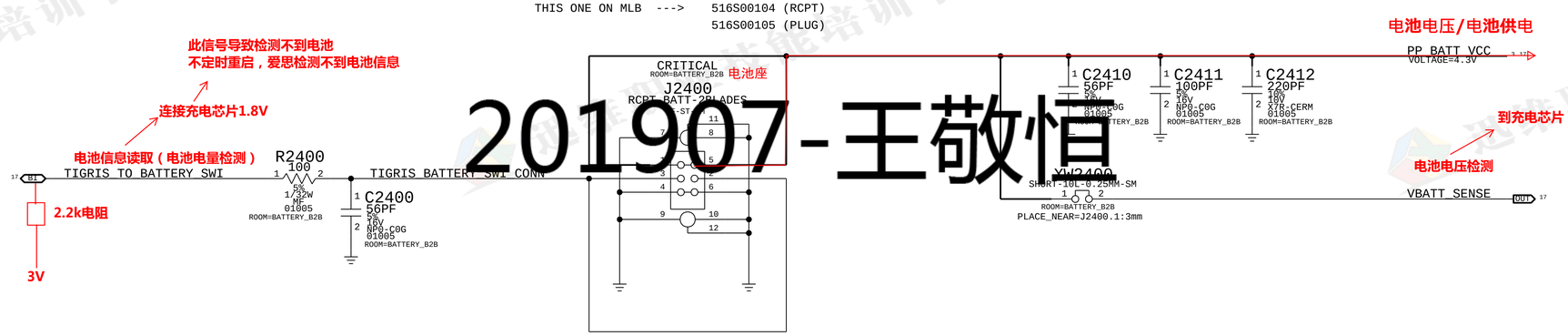


201907-王敬恒

SYNC_MASTER=N/A SYNC_DATE=N/A

PAGE TITLE
SYSTEM POWER:BATTERY CONN

Apple Inc.

DRAWING NUMBER 051-1902 SIZE D

REVISION A.0.0

BRANCH

PAGE 24 OF 49

SHEET 18 OF 59

NOTICE OF PROPRIETARY PROPERTY:
THE INFORMATION CONTAINED HEREIN IS THE PROPRIETARY PROPERTY OF APPLE INC.
THE POSESSOR AGREES TO THE FOLLOWING:
I TO MAINTAIN THIS DOCUMENT IN CONFIDENCE
II NOT TO REPRODUCE OR COPY IT
III NOT TO REVEAL OR PUBLISH IT IN WHOLE OR PART
IV ALL RIGHTS RESERVED

# CARBON - ACCEL & GYRO

INVENSENSE (APN: 338S00017, 338S00087)

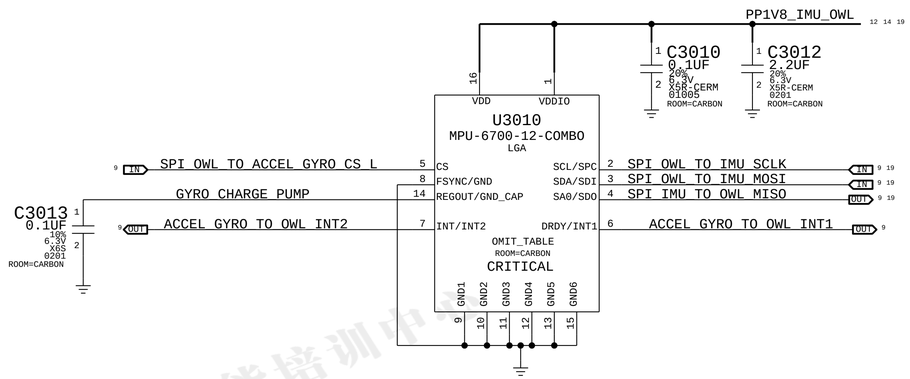


# MAGNESIUM - COMPASS

ALPS (APN:338S00084)

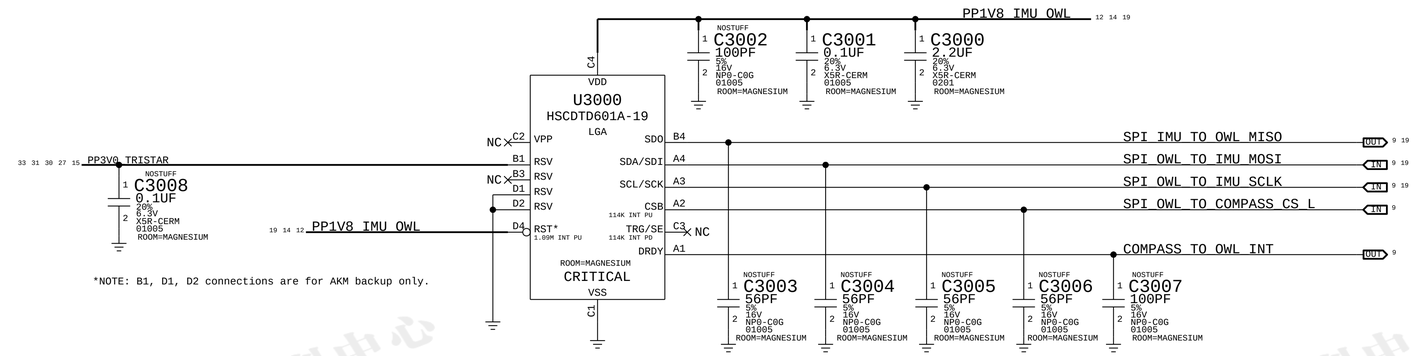


*NOTE: B1, D1, D2 connections are for AKM backup only.

201907-王敬恒

# DISCRETE ACCEL

BOSCH (APN: 338S1163)

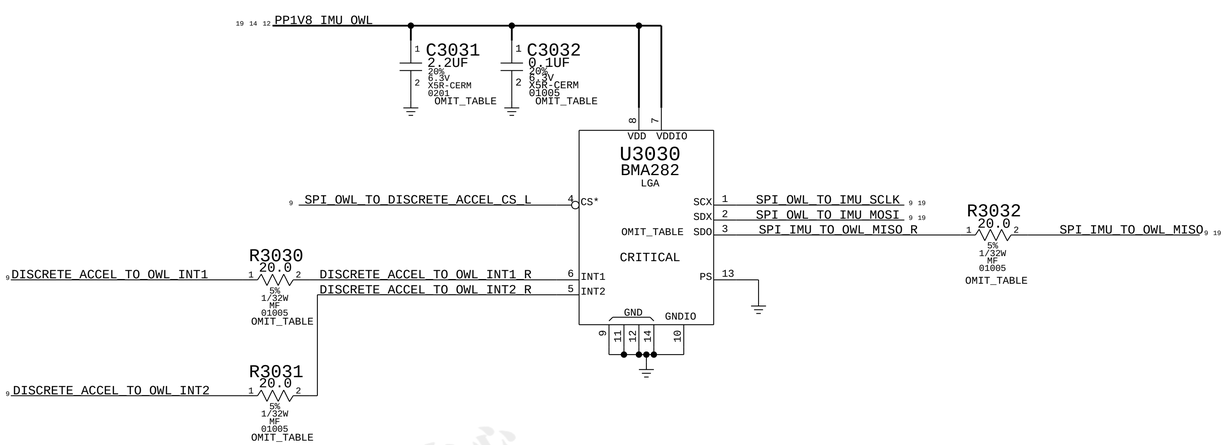


# PHOSPHOROUS

BOSCH (APN:338S00044)

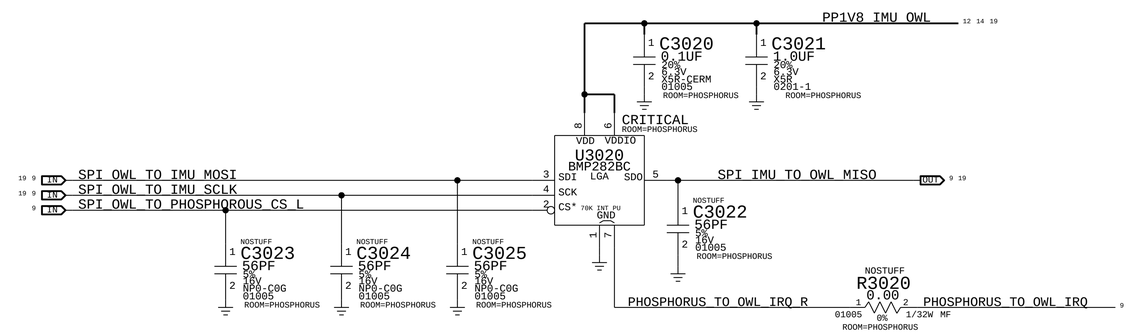


R3020 SHOULD BE STUFFED FOR ST PHOSPHORUS ONLY.
FOR BOSCH PHOSPHORUS, PINS 1 AND 7 ARE SHORTED INTERNALLY,
SO NO NEED FOR 0-OHM TO GROUND OPTION ON PIN 7.

SYNC_MASTER=N/A SYNC_DATE=N/A

PAGE TITLE: SENSORS:MOTION SENSORS

Apple Inc.

DRAWING NUMBER: 051-1902 SIZE: D

REVISION: A.0.0

BRANCH

PAGE: 30 OF 49

SHEET: 19 OF 59

NOTICE OF PROPRIETARY PROPERTY:
THE INFORMATION CONTAINED HEREIN IS THE PROPRIETARY PROPERTY OF APPLE INC.
THE POSESSOR AGREES TO THE FOLLOWING:
I TO MAINTAIN THIS DOCUMENT IN CONFIDENCE
II NOT TO REPRODUCE OR COPY IT
III NOT TO REVEAL OR PUBLISH IT IN WHOLE OR PART
IV ALL RIGHTS RESERVED

# FOREHEAD FLEX (FCAM)

## CAMERA POWER

PP1V8 — FL3100 FERR-22-OHM-1A-0.055OHM (0201, ROOM=CG_B2B) — PP1V8_FCAM_CONN (VOLTAGE=1.8V)
- C3101 0.1UF 20% 6.3V X5R-CERM 01005 ROOM=CG_B2B
- C3100 100PF 5% 16V NP0-C0G 01005 ROOM=CG_B2B

PP1V2_CAMERA — FL3102 FERR-22-OHM-1A-0.055OHM (0201, ROOM=CG_B2B) — PP1V2_FCAM_VCORE_CONN (VOLTAGE=1.2V)
- C3103 0.1UF 20% 6.3V X5R-CERM 01005 ROOM=CG_B2B
- C3102 100PF 5% 16V NP0-C0G 01005 ROOM=CG_B2B

PP2V85_CAM_AVDD_PMU — FL3104 FERR-22-OHM-1A-0.055OHM (0201, ROOM=CG_B2B) — PP2V85_FCAM_AVDD_CONN (VOLTAGE=2.85V)
- C3106 2.2UF 20% 6.3V X5R-CERM 0201 ROOM=CG_B2B
- C3105 0.1UF 20% 6.3V X5R-CERM 01005 ROOM=CG_B2B
- C3104 100PF 5% 16V NP0-C0G 01005 ROOM=CG_B2B

## CAMERA I/O

AP_TO_FCAM_CLK — FL3110 120-OHM-210MA (01005, ROOM=CG_B2B) — AP_TO_FCAM_CLK_CONN
- C3110 100PF 5% 16V NP0-C0G 01005 ROOM=CG_B2B

AP_TO_FCAM_SHUTDOWN_L — FL3111 120-OHM-210MA (01005, ROOM=CG_B2B) — AP_TO_FCAM_SHUTDOWN_CONN_L
- C3111 100PF 5% 16V NP0-C0G 01005 ROOM=CG_B2B

I2C_ISP_TO_FCAM_SCL
- C3112 56PF 5% 16V NP0-C0G 01005 ROOM=CG_B2B

I2C_ISP_BI_FCAM_SDA
- C3113 56PF 5% 16V NP0-C0G 01005 ROOM=CG_B2B

## CAMERA MIPI

CRITICAL L3100 65-OHM-0.1A-0.7-2GHZ TAM0605 SYM_VER-2 (ROOM=CG_B2B)
- MIPI_FCAM_TO_AP_DATA0_P — MIPI_FCAM_TO_AP_DATA0_CONN_P
- MIPI_FCAM_TO_AP_DATA0_N — MIPI_FCAM_TO_AP_DATA0_CONN_N

CRITICAL L3101 65-OHM-0.1A-0.7-2GHZ TAM0605 SYM_VER-2 (ROOM=CG_B2B)
- MIPI_FCAM_TO_AP_DATA1_P — MIPI_FCAM_TO_AP_DATA1_CONN_P
- MIPI_FCAM_TO_AP_DATA1_N — MIPI_FCAM_TO_AP_DATA1_CONN_N

CRITICAL L3102 65-OHM-0.1A-0.7-2GHZ TAM0605 SYM_VER-2 (ROOM=CG_B2B)
- MIPI_FCAM_TO_AP_CLK_P — MIPI_FCAM_TO_AP_CLK_CONN_P
- MIPI_FCAM_TO_AP_CLK_N — MIPI_FCAM_TO_AP_CLK_CONN_N

## PROX & ALS POWER

PP3V0_PROX_IRLED
- C3120 100PF 5% 16V NP0-C0G 01005 ROOM=CG_B2B
- C3121 0.1UF 20% 6.3V X5R-CERM 01005 ROOM=CG_B2B
- C3122 2.2UF 20% 6.3V X5R-CERM 0201 ROOM=CG_B2B
- C3123 2.2UF 20% 6.3V X5R-CERM 0201 ROOM=CG_B2B
- C3124 2.2UF 20% 6.3V X5R-CERM 0201 ROOM=CG_B2B

PP3V0_PROX_ALS — FL3125 120-OHM-210MA (01005, ROOM=CG_B2B) — PP3V0_PROX_CONN (VOLTAGE=3.0V)
- C3125 100PF 5% 16V NP0-C0G 01005 ROOM=CG_B2B

FL3126 120-OHM-210MA (01005, ROOM=CG_B2B) — PP3V0_ALS_CONN (VOLTAGE=3.0V)
- C3130 2.2UF 20% 6.3V X5R-CERM 0201 ROOM=CG_B2B
- C3129 2.2UF 20% 6.3V X5R-CERM 0201 ROOM=CG_B2B
- C3128 2.2UF 20% 6.3V X5R-CERM 0201 ROOM=CG_B2B
- C3127 0.1UF 20% 6.3V X5R-CERM 01005 ROOM=CG_B2B
- C3126 100PF 5% 16V NP0-C0G 01005 ROOM=CG_B2B

## PROX & ALS INTERFACE

I2C_TOUCH_TO_MAMBA_PROX_SCL — DOPPLER_PROX R3142 0.00 0% 1/32W MF 01005 ROOM=CG_B2B — PGND_IRLED_K
- C3140 56PF 5% 16V NP0-C0G 01005 ROOM=CG_B2B NOSTUFF

TOUCH_TO_PROX_TX_EN_BUFF
- R3140 1.00M 5% 1/32W MF 01005 ROOM=CG_B2B
- CRITICAL ANALOG_PROX Q3140 DMN3730UFB4 DFN1006H4-3 SYM_VER-1 ROOM=CG_B2B

PP1V8_TOUCH — R3141 100K 5% 1/32W MF 01005 ROOM=CG_B2B

NOTE:INTERRUPT FOR DOPPLER PROX
TOUCH_TO_PROX_RX_EN_FCAM_CONN

I2C_TOUCH_BI_MAMBA_PROX_SDA — DOPPLER_PROX R3144 0.00 0% 1/32W MF 01005 ROOM=CG_B2B

PROX_TO_TOUCH_RX_LCM_CONN — ANALOG_PROX R3143 0.00 0% 1/32W MF 01005 ROOM=CG_B2B — PROX_TO_TOUCH_RX_FCAM_CONN
- C3143 56PF 5% 16V NP0-C0G 01005 ROOM=CG_B2B NOSTUFF

I2C2_AP_SDA (MAKE_BASE=TRUE) — I2C2_AP_BI_ALS_SDA_CONN
- C3144 56PF 5% 16V NP0-C0G 01005 ROOM=CG_B2B

I2C2_AP_SCL (MAKE_BASE=TRUE) — I2C2_AP_TO_ALS_SCL_CONN
- C3145 56PF 5% 16V NP0-C0G 01005 ROOM=CG_B2B

ALS_TO_AP_INT_L — FL3146 120-OHM-210MA (01005, ROOM=CG_B2B) — ALS_TO_AP_INT_CONN_L
- C3146 100PF 5% 16V NP0-C0G 01005 ROOM=CG_B2B

## FOREHEAD CONNECTOR

THIS ONE ON MLB ---> 516S00048 (RCPT) 516S00049 (PLUG)

J3100 AA20L-S036VA1 F-ST-SM (ROOM=CG_B2B) CRITICAL

| Pin | Signal | Pin | Signal |
|---|---|---|---|
| 1 | CODEC_TO_RCVR_CONN_N | 2 | CODEC_TO_HAC_CONN_P |
| 3 | CODEC_TO_RCVR_CONN_P | 4 | CODEC_TO_HAC_CONN_N |
| 5 | PP1V8_FCAM_CONN | 6 | PP1V2_FCAM_VCORE_CONN |
| 7 | PP2V85_FCAM_AVDD_CONN | 8 | |
| 9 | | 10 | MIPI_FCAM_TO_AP_DATA0_CONN_N |
| 11 | | 12 | MIPI_FCAM_TO_AP_DATA0_CONN_P |
| 13 | AP_TO_FCAM_CLK_CONN | 14 | MIPI_FCAM_TO_AP_CLK_CONN_P |
| 15 | I2C_ISP_TO_FCAM_SCL | 16 | MIPI_FCAM_TO_AP_CLK_CONN_N |
| 17 | AP_TO_FCAM_SHUTDOWN_CONN_L | 18 | MIPI_FCAM_TO_AP_DATA1_CONN_P |
| 19 | I2C_ISP_BI_FCAM_SDA | 20 | MIPI_FCAM_TO_AP_DATA1_CONN_N |
| 21 | | 22 | |
| 23 | PP3V0_PROX_CONN | 24 | |
| 25 | TOUCH_TO_PROX_RX_EN_FCAM_CONN | 26 | PROX_TO_TOUCH_RX_FCAM_CONN |
| 27 | | 28 | PP3V0_ALS_CONN |
| 29 | I2C2_AP_BI_ALS_SDA_CONN | 30 | I2C2_AP_TO_ALS_SCL_CONN |
| 31 | ALS_TO_AP_INT_CONN_L | 32 | PP3V0_PROX_IRLED |
| 33 | PGND_IRLED_K | 34 | PP_CODEC_TO_FRONTMIC3_BIAS_CONN |
| 35 | FRONTMIC3_TO_CODEC_AIN4_CONN_N | 36 | FRONTMIC3_TO_CODEC_AIN4_CONN_P |
| 37 | | 38 | |
| 39 | | 40 | |
| 41 | | 42 | |

PP_CODEC_TO_FRONTMIC3_BIAS — FL3150 120-OHM-210MA (01005, ROOM=CG_B2B) — PP_CODEC_TO_FRONTMIC3_BIAS_CONN (VOLTAGE=2.86V)
- DZ3150 6.8V-100PF 01005 ROOM=CG_B2B

CODEC_TO_HAC_N — FL3151 70-OHM-25%-0.28A (01005, ROOM=CG_B2B) — CODEC_TO_HAC_CONN_N
- DZ3151 12V-33PF 01005-1 ROOM=CG_B2B (NO_XNET_CONNECTION=1)

CODEC_TO_HAC_P — FL3152 70-OHM-25%-0.28A (01005, ROOM=CG_B2B) — CODEC_TO_HAC_CONN_P
- DZ3152 12V-33PF 01005-1 ROOM=CG_B2B (NO_XNET_CONNECTION=1)

CODEC_TO_RCVR_N — FL3153 70-OHM-25%-0.28A (01005, ROOM=CG_B2B) — CODEC_TO_RCVR_CONN_N
- DZ3153 12V-33PF 01005-1 ROOM=CG_B2B (NO_XNET_CONNECTION=1)

CODEC_TO_RCVR_P — FL3154 70-OHM-25%-0.28A (01005, ROOM=CG_B2B) — CODEC_TO_RCVR_CONN_P
- DZ3154 12V-33PF 01005-1 ROOM=CG_B2B (NO_XNET_CONNECTION=1)

FRONTMIC3_TO_CODEC_AIN4_N — FL3155 120-OHM-210MA (01005, ROOM=CG_B2B) — FRONTMIC3_TO_CODEC_AIN4_CONN_N
- DZ3155 6.8V-100PF 01005 ROOM=CG_B2B (NO_XNET_CONNECTION=1)

FRONTMIC3_TO_CODEC_AIN4_P — FL3156 120-OHM-210MA (01005, ROOM=CG_B2B) — FRONTMIC3_TO_CODEC_AIN4_CONN_P
- DZ3156 6.8V-100PF 01005 ROOM=CG_B2B (NO_XNET_CONNECTION=1)

SYNC_MASTER=N/A SYNC_DATE=N/A

PAGE TITLE: CAMERA:FOREHEAD FLEX B2B

Apple Inc.

DRAWING NUMBER: 051-1902 SIZE: D
REVISION: A.0.0
BRANCH:
PAGE: 31 OF 49
SHEET: 20 OF 59

NOTICE OF PROPRIETARY PROPERTY:
THE INFORMATION CONTAINED HEREIN IS THE PROPRIETARY PROPERTY OF APPLE INC.
THE POSESSOR AGREES TO THE FOLLOWING:
I TO MAINTAIN THIS DOCUMENT IN CONFIDENCE
II NOT TO REPRODUCE OR COPY IT
III NOT TO REVEAL OR PUBLISH IT IN WHOLE OR PART
IV ALL RIGHTS RESERVED

201907 王敬恒

# REAR CAMERA FLEX

## RCAM CONNECTOR

THIS ONE ON MLB ---> 516S00043 (RCPT)
516S00042 (PLUG)

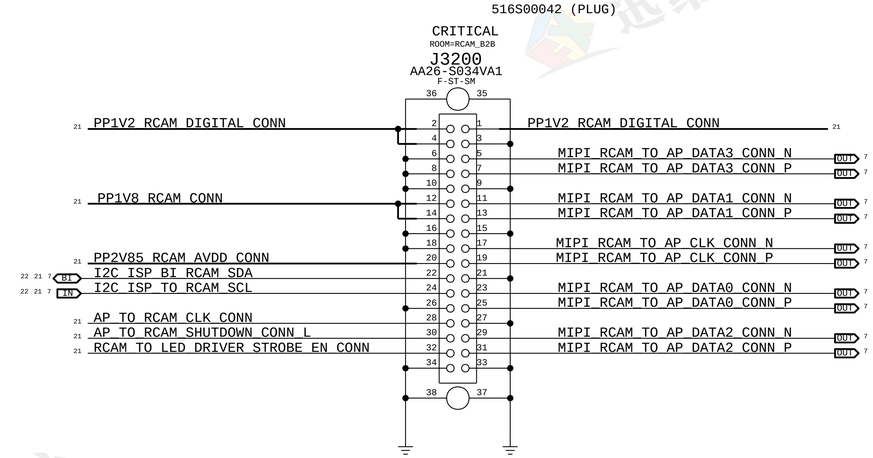


## CAMERA POWER

NOTE: OUTPUT IMPDEANCE MUST BE >0.01-OHM
IN ORDER TO MEET CAP ESR REQUIREMENT PER LDO SPEC.

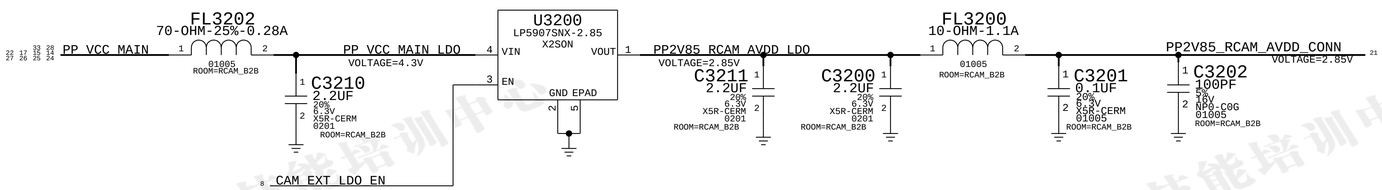


## DIGITAL I/O

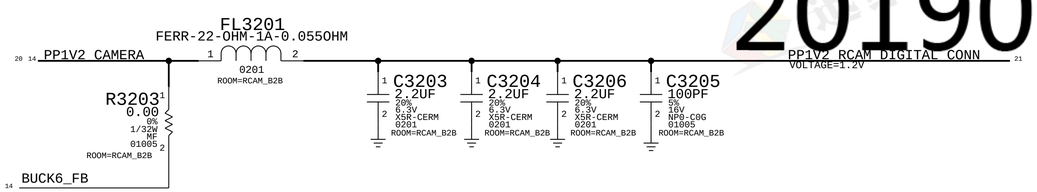


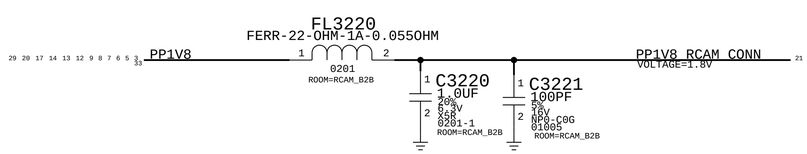


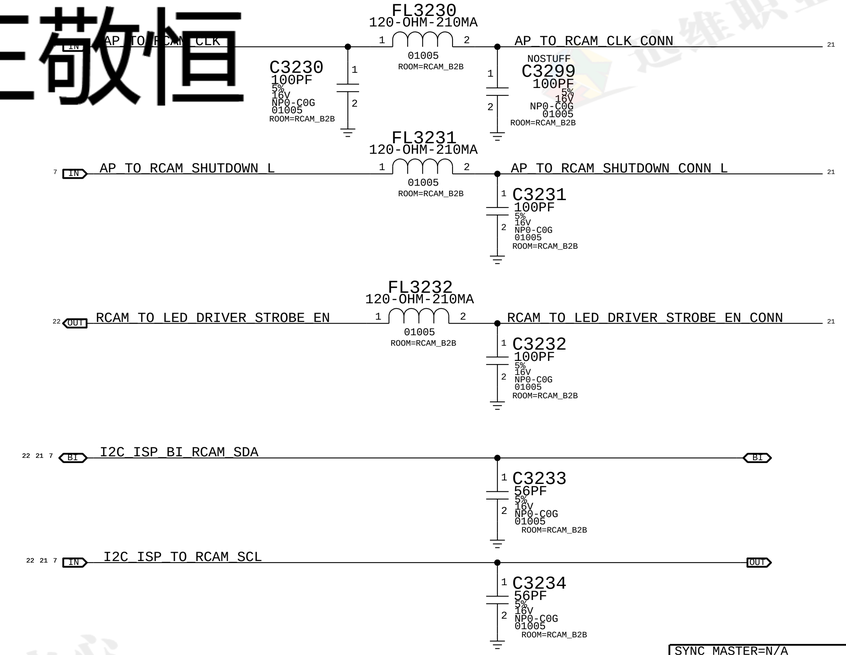


201907-王敬恒

SYNC_MASTER=N/A SYNC_DATE=N/A

PAGE TITLE
CAMERA:REAR CAMERA B2B

Apple Inc.

DRAWING NUMBER 051-1902 SIZE D
REVISION A.0.0
BRANCH
PAGE 32 OF 49
SHEET 21 OF 59

NOTICE OF PROPRIETARY PROPERTY:
THE INFORMATION CONTAINED HEREIN IS THE PROPRIETARY PROPERTY OF APPLE INC.
THE POSESSOR AGREES TO THE FOLLOWING:
I TO MAINTAIN THIS DOCUMENT IN CONFIDENCE
II NOT TO REPRODUCE OR COPY IT
III NOT TO REVEAL OR PUBLISH IT IN WHOLE OR PART
IV ALL RIGHTS RESERVED

# DUAL LED STROBE DRIVER

APN:353S3899

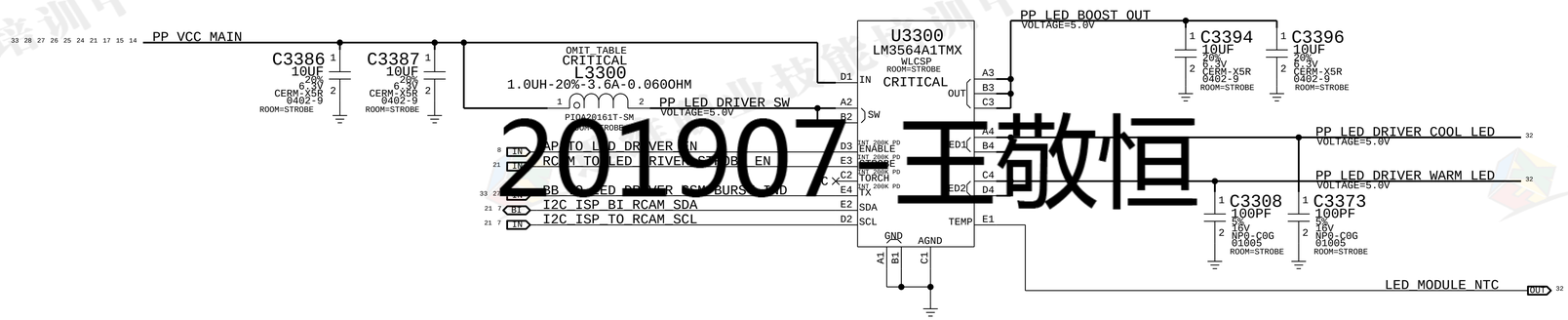


201907 王敬恒

SYNC_MASTER=N/A SYNC_DATE=N/A

PAGE TITLE
CAMERA:STROBE DRIVER

Apple Inc.

DRAWING NUMBER 051-1902 SIZE D

REVISION A.0.0

BRANCH

PAGE 33 OF 49

SHEET 22 OF 59

NOTICE OF PROPRIETARY PROPERTY:
THE INFORMATION CONTAINED HEREIN IS THE PROPRIETARY PROPERTY OF APPLE INC.
THE POSESSOR AGREES TO THE FOLLOWING:
I TO MAINTAIN THIS DOCUMENT IN CONFIDENCE
II NOT TO REPRODUCE OR COPY IT
III NOT TO REVEAL OR PUBLISH IT IN WHOLE OR PART
IV ALL RIGHTS RESERVED

# CALTRA AUDIO CODEC (ANALOG INPUTS & OUTPUTS)

201907-王敬恒

SYNC_MASTER=N71_SINGLE_BRD SYNC_DATE=05/29/2014

PAGE TITLE
AUDIO:CALTRA CODEC (1/2)

Apple Inc.

DRAWING NUMBER 051-1902 SIZE D

REVISION A.0.0

BRANCH

PAGE 35 OF 49

SHEET 23 OF 59

NOTICE OF PROPRIETARY PROPERTY:
THE INFORMATION CONTAINED HEREIN IS THE PROPRIETARY PROPERTY OF APPLE INC.
THE POSESSOR AGREES TO THE FOLLOWING:
I TO MAINTAIN THIS DOCUMENT IN CONFIDENCE
II NOT TO REPRODUCE OR COPY IT
III NOT TO REVEAL OR PUBLISH IT IN WHOLE OR PART
IV ALL RIGHTS RESERVED

# CALTRA AUDIO CODEC (POWER & I/O)

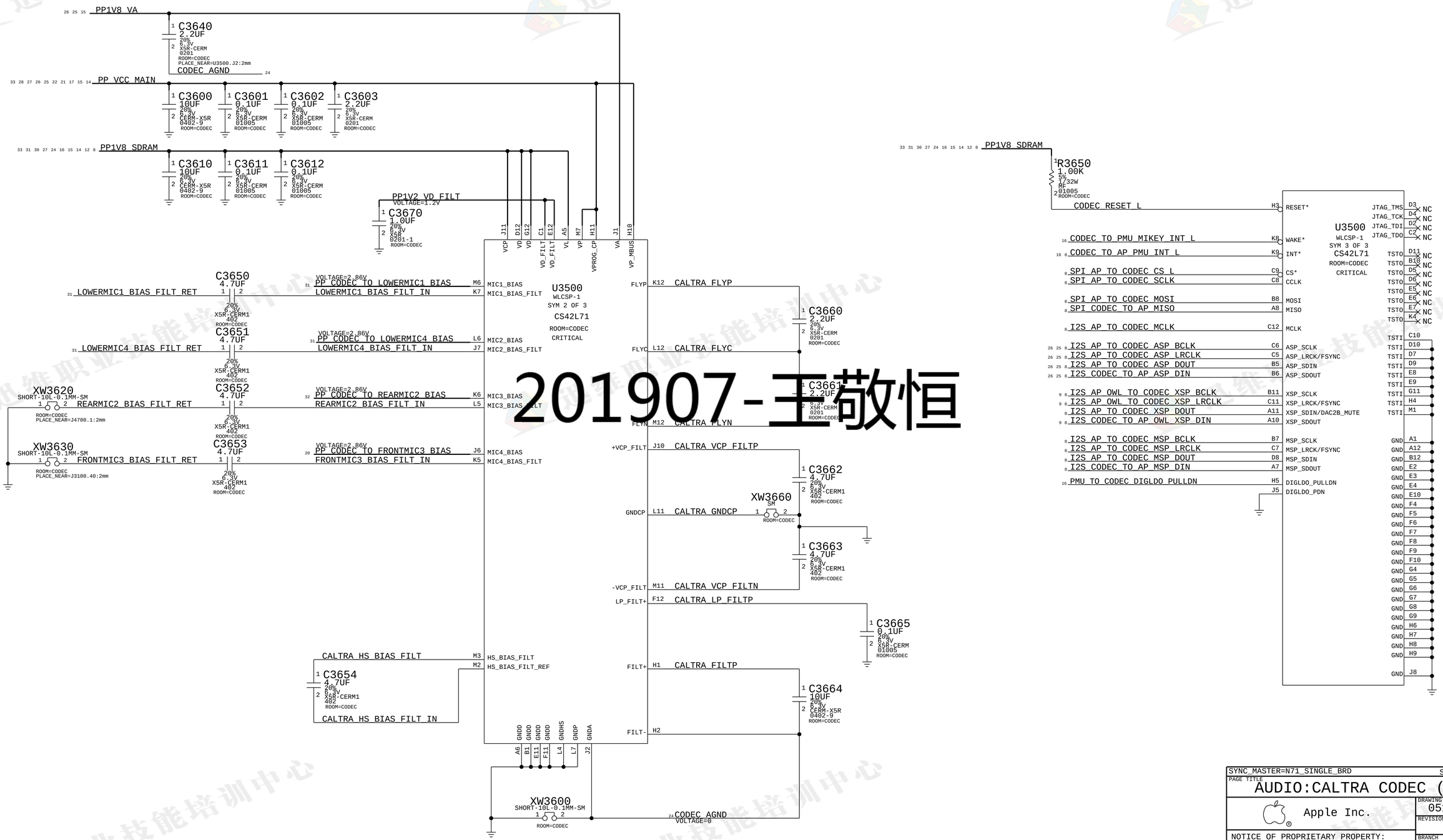


201907-王敬恒

SYNC_MASTER=N71_SINGLE_BRD SYNC_DATE=05/29/2014

PAGE TITLE
AUDIO:CALTRA CODEC (2/2)

Apple Inc.

DRAWING NUMBER 051-1902 SIZE D
REVISION A.0.0
BRANCH
PAGE 36 OF 49
SHEET 24 OF 59

NOTICE OF PROPRIETARY PROPERTY:
THE INFORMATION CONTAINED HEREIN IS THE PROPRIETARY PROPERTY OF APPLE INC.
THE POSESSOR AGREES TO THE FOLLOWING:
I TO MAINTAIN THIS DOCUMENT IN CONFIDENCE
II NOT TO REPRODUCE OR COPY IT
III NOT TO REVEAL OR PUBLISH IT IN WHOLE OR PART
IV ALL RIGHTS RESERVED

# SPEAKER AMPLIFIER

APN: 338S1285

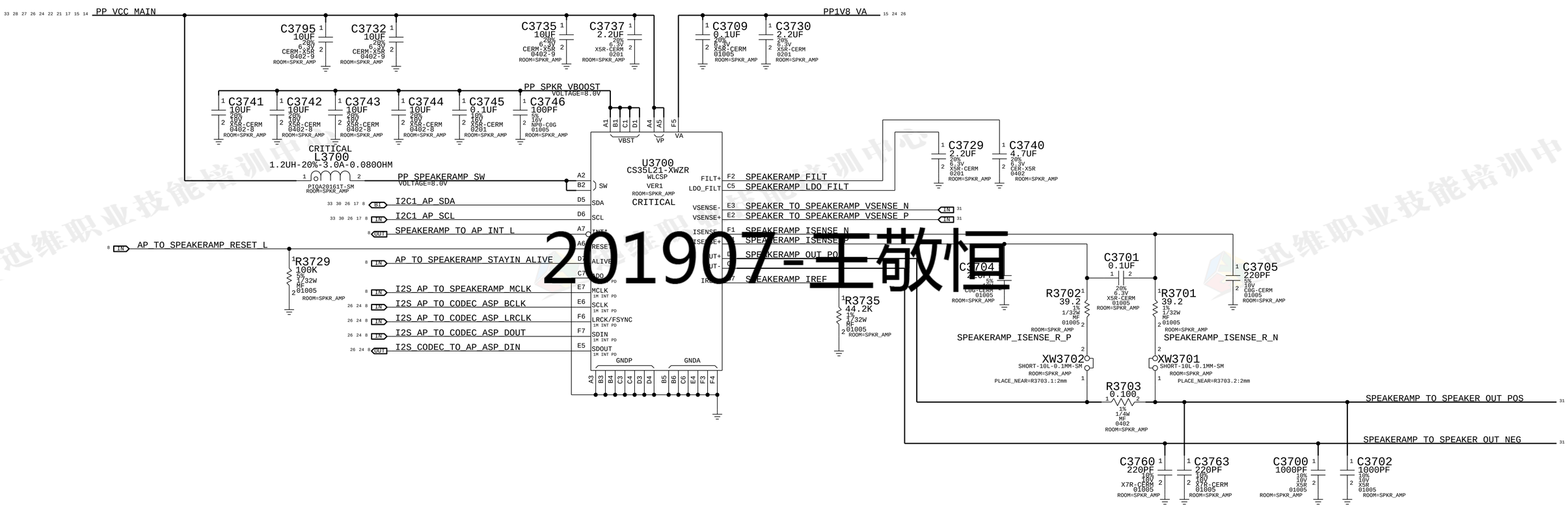


201907-王敬恒

SYNC_MASTER=N/A SYNC_DATE=N/A

PAGE TITLE
AUDIO:SPEAKER DRIVER

Apple Inc.

DRAWING NUMBER 051-1902 SIZE D

REVISION A.0.0

BRANCH

PAGE 37 OF 49

SHEET 25 OF 59

NOTICE OF PROPRIETARY PROPERTY:
THE INFORMATION CONTAINED HEREIN IS THE PROPRIETARY PROPERTY OF APPLE INC.
THE POSESSOR AGREES TO THE FOLLOWING:
I TO MAINTAIN THIS DOCUMENT IN CONFIDENCE
II NOT TO REPRODUCE OR COPY IT
III NOT TO REVEAL OR PUBLISH IT IN WHOLE OR PART
IV ALL RIGHTS RESERVED

# ARC DRIVER

APN: 338S1285

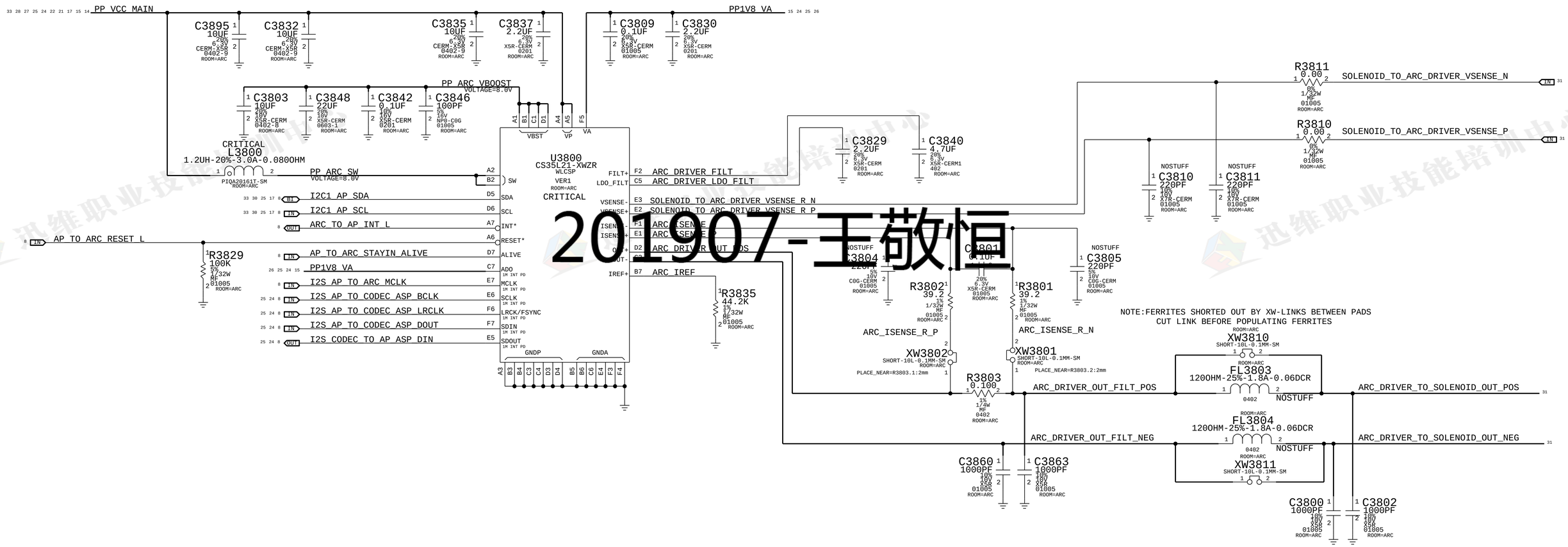


201907-王敬恒

| | |
|---|---|
| PAGE TITLE | AUDIO:ARC DRIVER |
| | Apple Inc. |
| DRAWING NUMBER | 051-1902 |
| SIZE | D |
| REVISION | A.0.0 |
| BRANCH | |
| PAGE | 38 OF 49 |
| SHEET | 26 OF 59 |

NOTICE OF PROPRIETARY PROPERTY:
THE INFORMATION CONTAINED HEREIN IS THE PROPRIETARY PROPERTY OF APPLE INC.
THE POSESSOR AGREES TO THE FOLLOWING:
I TO MAINTAIN THIS DOCUMENT IN CONFIDENCE
II NOT TO REPRODUCE OR COPY IT
III NOT TO REVEAL OR PUBLISH IT IN WHOLE OR PART
IV ALL RIGHTS RESERVED

# DISPLAY & TOUCH - POWER SUPPLIES

## CHESTNUT DISPLAY PMU

APN:338S1172

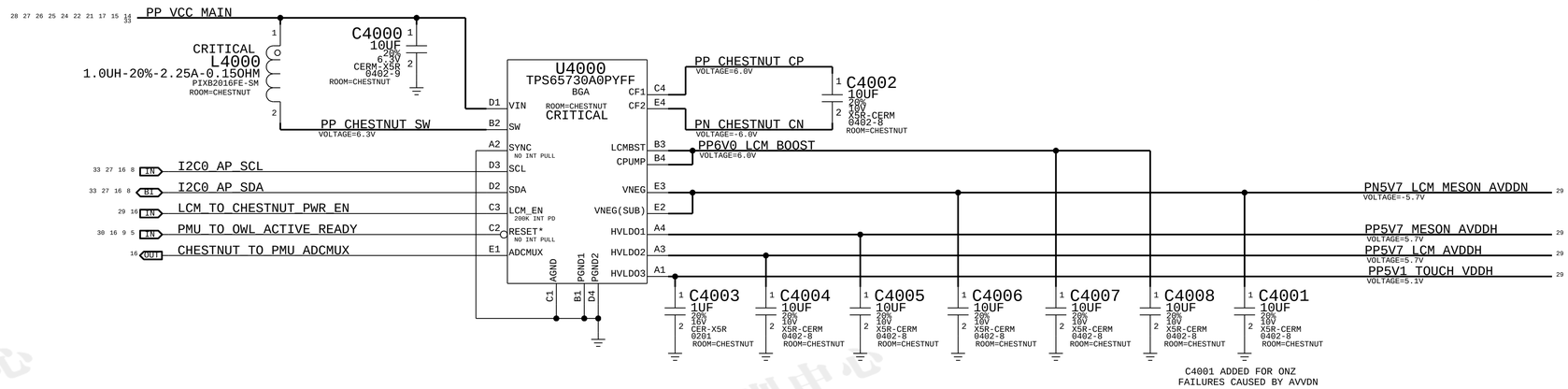


## LED BACKLIGHT DRIVER

APN:353S00407

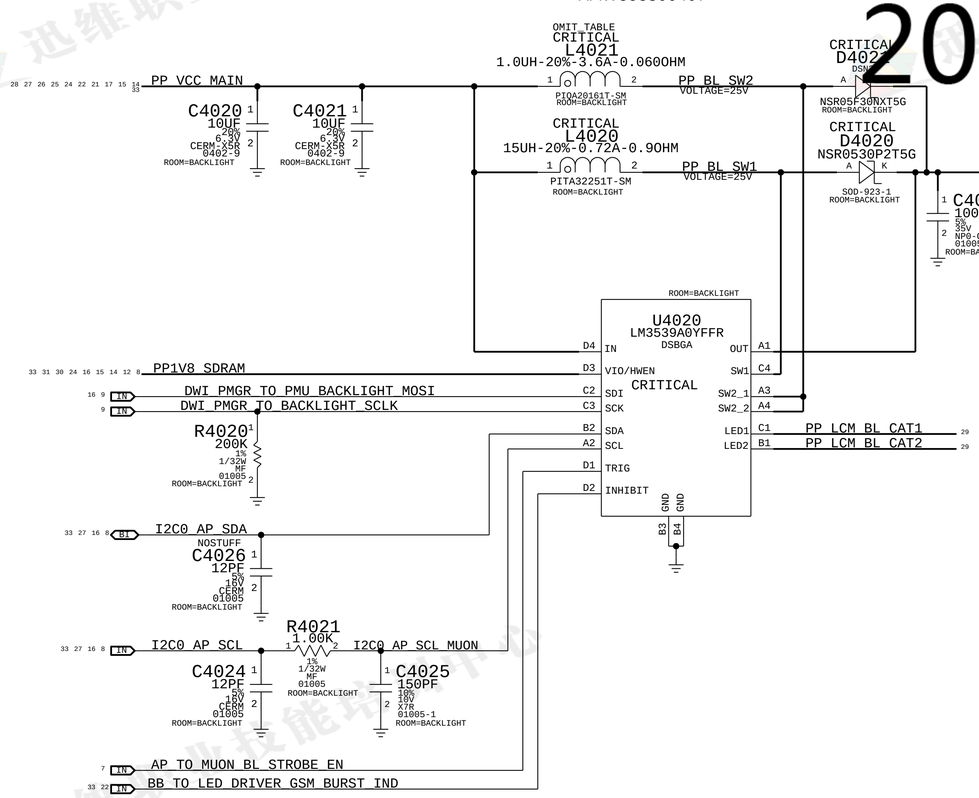


## MOJAVE MESA BOOST

APN:353S00671

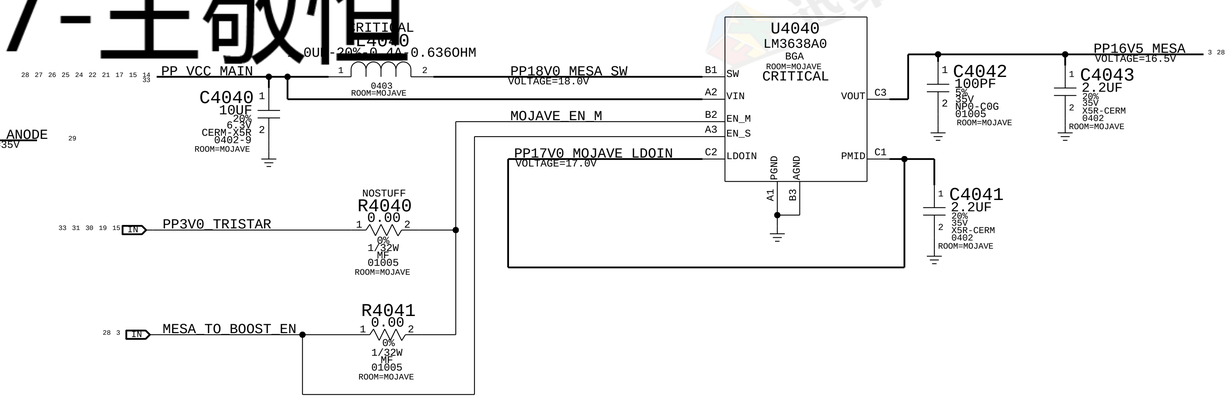


201907-王敬恒

SYNC_MASTER=N/A SYNC_DATE=N/A

PAGE TITLE
DISPLAY:POWER

Apple Inc.

DRAWING NUMBER 051-1902 SIZE D

REVISION A.0.0

BRANCH

PAGE 40 OF 49

SHEET 27 OF 59

NOTICE OF PROPRIETARY PROPERTY:
THE INFORMATION CONTAINED HEREIN IS THE PROPRIETARY PROPERTY OF APPLE INC.
THE POSESSOR AGREES TO THE FOLLOWING:
I TO MAINTAIN THIS DOCUMENT IN CONFIDENCE
II NOT TO REPRODUCE OR COPY IT
III NOT TO REVEAL OR PUBLISH IT IN WHOLE OR PART
IV ALL RIGHTS RESERVED

# MAMBA & MESA (M&M) FLEX

## MESA POWER

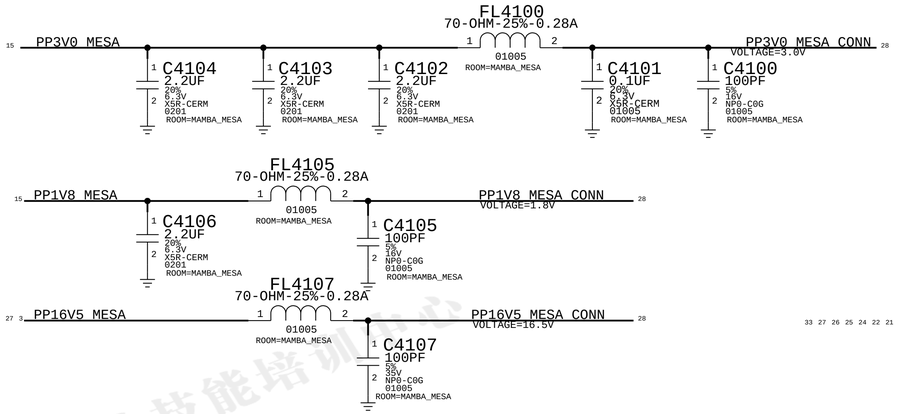


## MAMBA & MESA CONNECTOR

THIS ONE ON MLB ---> 516S00056 (RCPT)
516S00057 (PLUG)

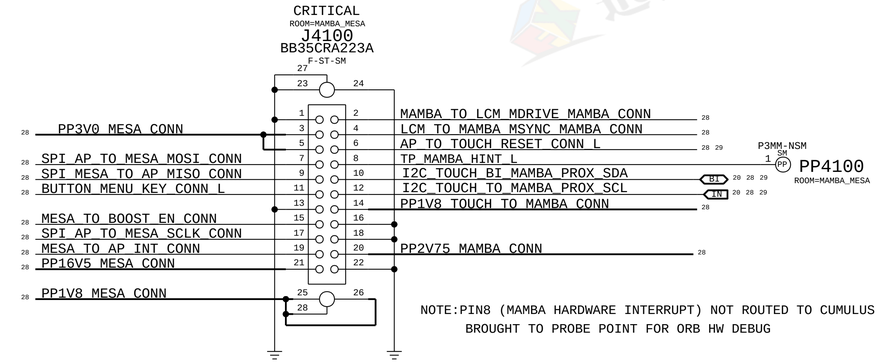


NOTE:PIN8 (MAMBA HARDWARE INTERRUPT) NOT ROUTED TO CUMULUS
BROUGHT TO PROBE POINT FOR ORB HW DEBUG

## MAMBA POWER

NOTE: OUTPUT IMPDEANCE MUST BE >0.01-OHM
IN ORDER TO MEET CAP ESR REQUIREMENT PER LDO SPEC.

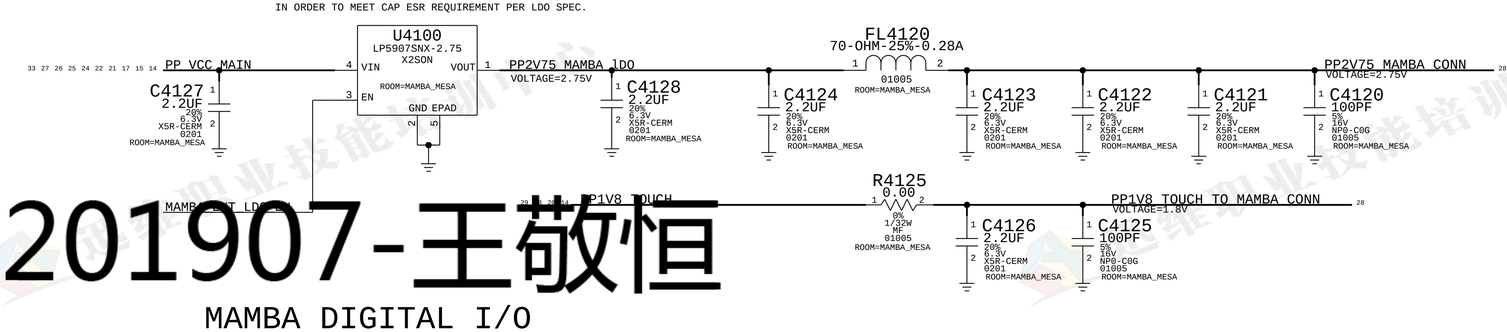


## MESA DIGITAL I/O

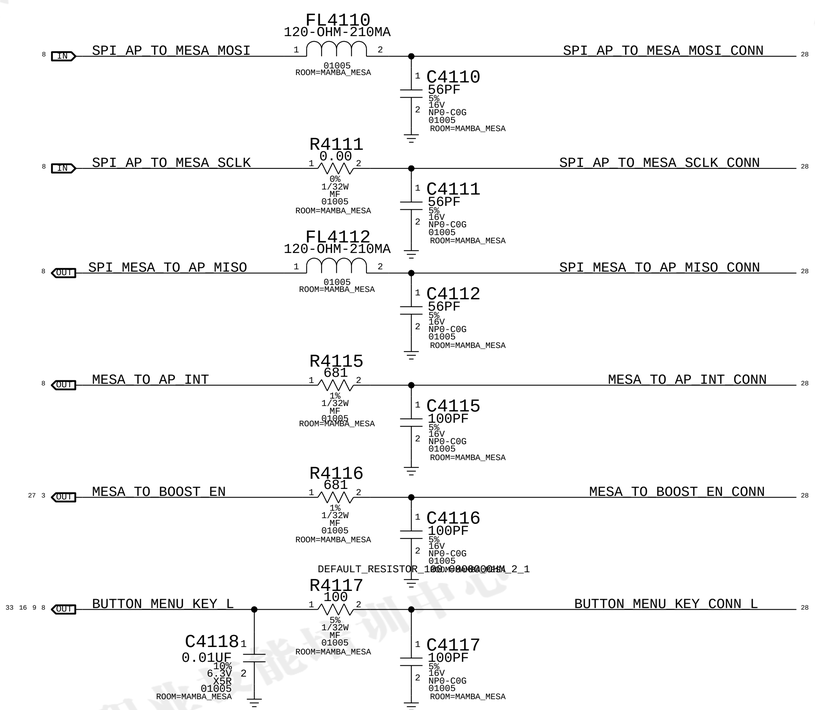


## MAMBA DIGITAL I/O

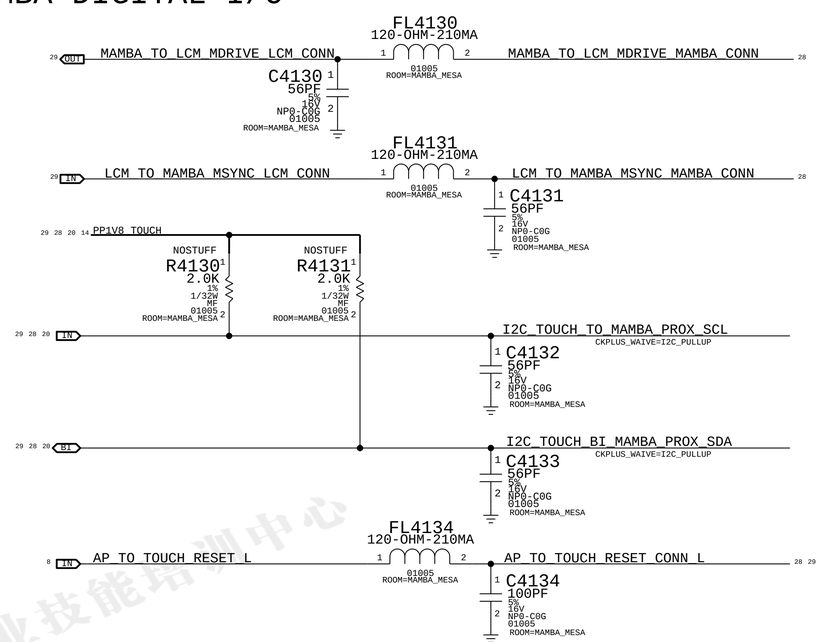


NOTE:TOUCH I2C PULL-UPS TO PP1V8_TOUCH INSIDE KEPLER
ADDING R4130, R4131 AS OPTION FOR TWEAKING VALUES.

201907-王敬恒

SYNC_MASTER=N/A SYNC_DATE=N/A

PAGE TITLE: TOUCH:ORB & MESA B2B

Apple Inc.

DRAWING NUMBER: 051-1902 SIZE: D

REVISION: A.0.0

BRANCH

PAGE: 41 OF 49

SHEET: 28 OF 59

NOTICE OF PROPRIETARY PROPERTY:
THE INFORMATION CONTAINED HEREIN IS THE PROPRIETARY PROPERTY OF APPLE INC.
THE POSESSOR AGREES TO THE FOLLOWING:
I TO MAINTAIN THIS DOCUMENT IN CONFIDENCE
II NOT TO REPRODUCE OR COPY IT
III NOT TO REVEAL OR PUBLISH IT IN WHOLE OR PART
IV ALL RIGHTS RESERVED

# DISPLAY & TOUCH FLEX

## DISPLAY POWER

PP5V7_LCM_AVDDH — FL4200 240OHM-350MA (0201, ROOM=KEPLER_B2B) — PP5V7_LCM_AVDDH_CONN (VOLTAGE=5.7V)
C4200 2.2UF 20% 6.3V X5R-CERM 0201 ROOM=KEPLER_B2B
C4201 2.2UF 20% 6.3V X5R-CERM 0201 ROOM=KEPLER_B2B
C4202 2.2UF 20% 6.3V X5R-CERM 0201 ROOM=KEPLER_B2B
C4203 2.2UF 20% 6.3V X5R-CERM 0201 ROOM=KEPLER_B2B
C4204 100PF 5% 16V NP0-C0G 01005 ROOM=KEPLER_B2B

PP1V8 — FL4205 240OHM-350MA (0201, ROOM=KEPLER_B2B) — PP1V8_LCM_CONN (VOLTAGE=1.8V)
C4205 2.2UF 20% 6.3V X5R-CERM 0201 ROOM=KEPLER_B2B
C4206 100PF 5% 16V NP0-C0G 01005 ROOM=KEPLER_B2B

PN5V7_LCM_MESON_AVDDN — FL4207 70-OHM-25%-0.28A (01005, ROOM=KEPLER_B2B) — PN5V7_LCM_MESON_AVDDN_CONN (VOLTAGE=-5.7V)
C4207 100PF 5% 16V NP0-C0G 01005 ROOM=KEPLER_B2B

PP5V7_MESON_AVDDH — FL4208 240OHM-350MA (0201, ROOM=KEPLER_B2B) — PP5V7_MESON_AVDDH_CONN (VOLTAGE=5.7V)
C4208 100PF 5% 16V NP0-C0G 01005 ROOM=KEPLER_B2B

PP1V8_TOUCH — FL4209 240OHM-350MA (0201, ROOM=KEPLER_B2B) — PP1V8_TOUCH_CONN (VOLTAGE=1.8V)
C4215 2.2UF 20% 6.3V X5R-CERM 0201 ROOM=KEPLER_B2B
C4209 100PF 5% 16V NP0-C0G 01005 ROOM=KEPLER_B2B

PP5V1_TOUCH_VDDH — FL4210 240OHM-350MA (0201, ROOM=KEPLER_B2B) — PP5V1_TOUCH_VDDH_CONN (VOLTAGE=5.1V)
C4210 100PF 5% 16V NP0-C0G 01005 ROOM=KEPLER_B2B

## BACKLIGHT

PP_LCM_BL_ANODE — FL4211 240OHM-350MA (0201, ROOM=KEPLER_B2B) — PP_LCM_BL_ANODE_CONN (VOLTAGE=25V)
C4211 100PF 5% 35V NP0-C0G 01005 ROOM=KEPLER_B2B

PP_LCM_BL_CAT1 — FL4212 240OHM-350MA (0201, ROOM=KEPLER_B2B) — PP_LCM_BL_CAT1_CONN (VOLTAGE=25V)
C4212 100PF 5% 35V NP0-C0G 01005 ROOM=KEPLER_B2B

PP_LCM_BL_CAT2 — FL4213 240OHM-350MA (0201, ROOM=KEPLER_B2B) — PP_LCM_BL_CAT2_CONN (VOLTAGE=25V)
C4213 100PF 5% 35V NP0-C0G 01005 ROOM=KEPLER_B2B

## DISPLAY MIPI

CRITICAL L4200 65-OHM-0.1A-0.7-2GHZ TAM0605 SYM_VER-2 (ROOM=KEPLER_B2B)
MIPI_AP_TO_LCM_CLK_P — MIPI_AP_TO_LCM_CLK_CONN_P
MIPI_AP_TO_LCM_CLK_N — MIPI_AP_TO_LCM_CLK_CONN_N

CRITICAL L4201 65-OHM-0.1A-0.7-2GHZ TAM0605 SYM_VER-2 (ROOM=KEPLER_B2B)
MIPI_AP_TO_LCM_DATA0_P — MIPI_AP_TO_LCM_DATA0_CONN_P
MIPI_AP_TO_LCM_DATA0_N — MIPI_AP_TO_LCM_DATA0_CONN_N

CRITICAL L4202 65-OHM-0.1A-0.7-2GHZ TAM0605 SYM_VER-2 (ROOM=KEPLER_B2B)
MIPI_AP_TO_LCM_DATA1_P — MIPI_AP_TO_LCM_DATA1_CONN_P
MIPI_AP_TO_LCM_DATA1_N — MIPI_AP_TO_LCM_DATA1_CONN_N

## DISPLAY EEPROM I2C

I2C2_AP_SDA — NOSTUFF C4223 56PF 5% 16V NP0-C0G 01005 ROOM=KEPLER_B2B
I2C2_AP_SCL — NOSTUFF C4224 56PF 5% 16V NP0-C0G 01005 ROOM=KEPLER_B2B

## DISPLAY CONTROL SIGNALS

LCM_TO_CHESTNUT_PWR_EN — FL4220 120-OHM-210MA (01005, ROOM=KEPLER_B2B) — LCM_TO_CHESTNUT_PWR_EN_CONN
C4220 100PF 5% 16V NP0-C0G 01005 ROOM=KEPLER_B2B

AP_TO_LCM_RESET_L — FL4221 120-OHM-210MA (01005, ROOM=KEPLER_B2B) — AP_TO_LCM_RESET_CONN_L
R4220 100K 1% 1/32W MF 01005 ROOM=KEPLER_B2B
C4221 100PF 5% 16V NP0-C0G 01005 ROOM=KEPLER_B2B

PMU_TO_LCM_PANICB — R4222 10 1/32W MF 5% 01005 ROOM=KEPLER_B2B — PMU_TO_LCM_PANICB_CONN
C4222 100PF 5% 16V NP0-C0G 01005 ROOM=KEPLER_B2B

## OWL TO TOUCH INTERFACE

LCM_TO_OWL_BSYNC — FL4230 120-OHM-210MA (01005, ROOM=KEPLER_B2B) — LCM_TO_OWL_BSYNC_CONN
C4230 56PF 5% 16V NP0-C0G 01005 ROOM=KEPLER_B2B

UART_OWL_TO_TOUCH_TXD — FL4231 120-OHM-210MA (01005, ROOM=KEPLER_B2B) — UART_OWL_TO_TOUCH_TXD_CONN
C4231 56PF 5% 16V NP0-C0G 01005 ROOM=KEPLER_B2B

TOUCH_TO_OWL_ACCEL_DATA_REQUEST — FL4232 120-OHM-210MA (01005, ROOM=KEPLER_B2B) — TOUCH_TO_OWL_ACCEL_DATA_REQUEST_CONN
C4232 56PF 5% 16V NP0-C0G 01005 ROOM=KEPLER_B2B

## PROX TO TOUCH INTERFACE

PP1V8_TOUCH
R4240 100K 5% 1/32W MF 01005 ROOM=KEPLER_B2B
C4240 0.22UF 20% 6.3V X5R 01005-1
U4240 74AUP1G04GX SOT1226 ROOM=KEPLER_B2B CRITICAL
TOUCH_TO_PROX_TX_EN_CONN_L — TOUCH_TO_PROX_TX_EN_BUFF

TOUCH_TO_PROX_RX_EN_FCAM_CONN — FL4241 120-OHM-210MA (01005, ROOM=KEPLER_B2B) — TOUCH_TO_PROX_RX_EN_LCM_CONN
C4241 100PF 5% 16V NP0-C0G 01005 ROOM=KEPLER_B2B

## DISPLAY CONNECTOR

THIS ONE ON MLB ---> 516S00038 (RCPT)
516S00037 (PLUG)

CRITICAL
J4200 BM28P0.6-44DS-0.35V F-ST-SM (ROOM=KEPLER_B2B)

| Pin | Net | Pin | Net |
|---|---|---|---|
| 1 | PP_LCM_BL_CAT1_CONN | 2 | MAMBA_TO_LCM_MDRIVE_LCM_CONN |
| 3 | PP_LCM_BL_ANODE_CONN | 4 | NC_KEPLER_MESON_TEST_MUX2_CONN |
| 5 | PP_LCM_BL_CAT2_CONN | 6 | NC_KEPLER_MESON_TEST_MUX0_CONN |
| 7 | | 8 | SPI_AP_TO_TOUCH_SCLK_CONN |
| 9 | MIPI_AP_TO_LCM_CLK_CONN_N | 10 | TOUCH_TO_PROX_RX_EN_LCM_CONN |
| 11 | MIPI_AP_TO_LCM_CLK_CONN_P | 12 | PROX_TO_TOUCH_RX_LCM_CONN |
| 13 | | 14 | SPI_AP_TO_TOUCH_CS_CONN_L |
| 15 | MIPI_AP_TO_LCM_DATA1_CONN_N | 16 | TOUCH_TO_OWL_ACCEL_DATA_REQUEST_CONN |
| 17 | MIPI_AP_TO_LCM_DATA1_CONN_P | 18 | I2C2_AP_SDA |
| 19 | | 20 | I2C_TOUCH_BI_MAMBA_PROX_SDA |
| 21 | MIPI_AP_TO_LCM_DATA0_CONN_N | 22 | SPI_TOUCH_TO_AP_MISO_CONN |
| 23 | MIPI_AP_TO_LCM_DATA0_CONN_P | 24 | SPI_AP_TO_TOUCH_MOSI_CONN |
| 25 | | 26 | LCM_TO_OWL_BSYNC_CONN |
| 27 | NC_KEPLER_PHOTON_PIFA_CONN | 28 | LCM_TO_CHESTNUT_PWR_EN_CONN |
| 29 | LCM_TO_MAMBA_MSYNC_LCM_CONN | 30 | PP5V1_TOUCH_VDDH_CONN |
| 31 | PMU_TO_LCM_PANICB_CONN | 32 | AP_TO_TOUCH_RESET_CONN_L |
| 33 | AP_TO_LCM_RESET_CONN_L | 34 | TOUCH_TO_PROX_TX_EN_CONN_L |
| 35 | PP5V7_MESON_AVDDH_CONN | 36 | I2C2_AP_SCL |
| 37 | PP1V8_LCM_CONN | 38 | I2C_TOUCH_TO_MAMBA_PROX_SCL |
| 39 | PN5V7_LCM_MESON_AVDDN_CONN | 40 | UART_OWL_TO_TOUCH_TXD_CONN |
| 41 | PP5V7_LCM_AVDDH_CONN | 42 | TOUCH_TO_AP_INT_L_CONN |
| 43 | PP1V8_TOUCH_CONN | 44 | AP_TO_TOUCH_CLK32K_RESET_CONN_L |
| 45, 46, 47, 48 | | | |

## AP TO TOUCH INTERFACE

SPI_AP_TO_TOUCH_CS_L — FL4250 120-OHM-210MA (01005, ROOM=KEPLER_B2B) — SPI_AP_TO_TOUCH_CS_CONN_L
C4250 56PF 5% 16V NP0-C0G 01005 ROOM=KEPLER_B2B

SPI_AP_TO_TOUCH_SCLK — FL4251 120-OHM-210MA (01005, ROOM=KEPLER_B2B) — SPI_AP_TO_TOUCH_SCLK_CONN
C4251 56PF 5% 16V NP0-C0G 01005 ROOM=KEPLER_B2B

SPI_AP_TO_TOUCH_MOSI — FL4252 120-OHM-210MA (01005, ROOM=KEPLER_B2B) — SPI_AP_TO_TOUCH_MOSI_CONN
C4252 56PF 5% 16V NP0-C0G 01005 ROOM=KEPLER_B2B

SPI_TOUCH_TO_AP_MISO — FL4253 120-OHM-210MA (01005, ROOM=KEPLER_B2B) — SPI_TOUCH_TO_AP_MISO_CONN
C4253 56PF 5% 16V NP0-C0G 01005 ROOM=KEPLER_B2B

TOUCH_TO_AP_INT_L — FL4254 120-OHM-210MA (01005, ROOM=KEPLER_B2B) — TOUCH_TO_AP_INT_L_CONN
C4254 100PF 5% 16V NP0-C0G 01005 ROOM=KEPLER_B2B

AP_TO_TOUCH_CLK32K_RESET_L — FL4255 120-OHM-210MA (01005, ROOM=KEPLER_B2B) — AP_TO_TOUCH_CLK32K_RESET_CONN_L
C4255 100PF 5% 16V NP0-C0G 01005 ROOM=KEPLER_B2B

SYNC_MASTER=N/A SYNC_DATE=N/A
PAGE TITLE: DISPLAY:KEPLER B2B
Apple Inc.
DRAWING NUMBER 051-1902 SIZE D
REVISION A.0.0
BRANCH
PAGE 42 OF 49
SHEET 29 OF 59

NOTICE OF PROPRIETARY PROPERTY:
THE INFORMATION CONTAINED HEREIN IS THE PROPRIETARY PROPERTY OF APPLE INC.
THE POSSESSOR AGREES TO THE FOLLOWING:
I TO MAINTAIN THIS DOCUMENT IN CONFIDENCE
II NOT TO REPRODUCE OR COPY IT
III NOT TO REVEAL OR PUBLISH IT IN WHOLE OR PART
IV ALL RIGHTS RESERVED

201907-王敬恒

# TRISTAR 2 (A3)

APN:343S0695

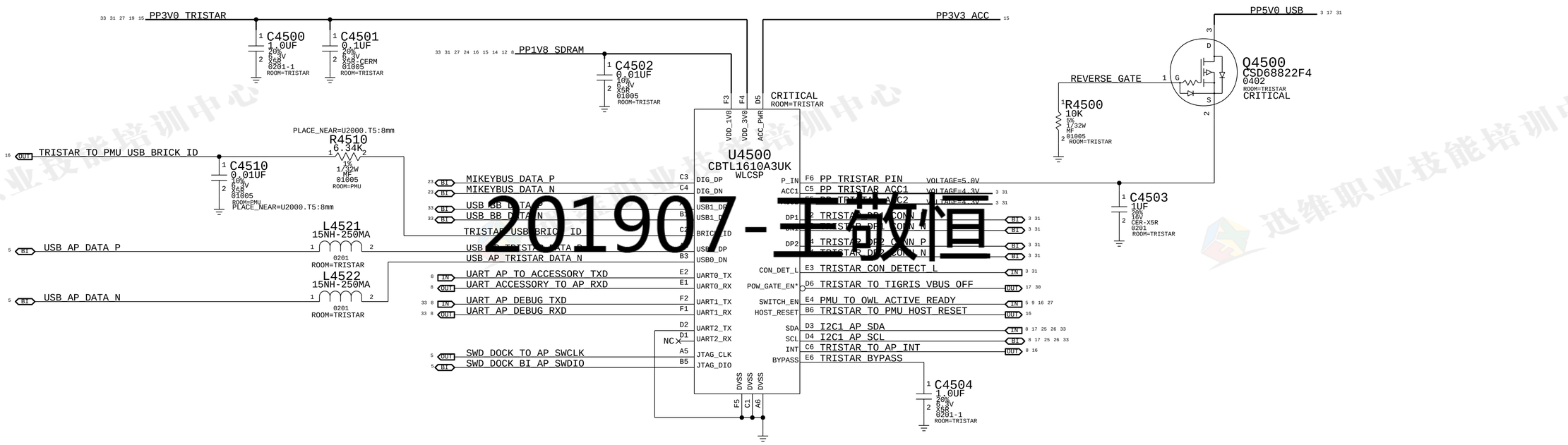


201907-王敏恒

| | |
|---|---|
| SYNC_MASTER=N/A | SYNC_DATE=N/A |
| PAGE TITLE | I/O:TRISTAR 2 |
| Apple Inc. | DRAWING NUMBER 051-1902 SIZE D |
| | REVISION A.0.0 |
| NOTICE OF PROPRIETARY PROPERTY: THE INFORMATION CONTAINED HEREIN IS THE PROPRIETARY PROPERTY OF APPLE INC. THE POSESSOR AGREES TO THE FOLLOWING: I TO MAINTAIN THIS DOCUMENT IN CONFIDENCE II NOT TO REPRODUCE OR COPY IT III NOT TO REVEAL OR PUBLISH IT IN WHOLE OR PART IV ALL RIGHTS RESERVED | BRANCH |
| | PAGE 45 OF 49 |
| | SHEET 30 OF 59 |

# DOCK FLEX CONNECTOR

## AUDIO JACK

R4600 3.3K 5% 1/32W MF 01005 ROOM=DOCK_B2B

23 OUT HPHONE_TO_CODEC_DETECT — HPHONE_TO_CODEC_DETECT_CONN 31

C4600 56PF 5% 16V NP0-C0G 01005 ROOM=DOCK_B2B

FL4600 FERR-33-OHM-0.8A-0.09-OHM 0201 ROOM=DOCK_B2B

23 BI CODEC_TO_HPHONE_HS3 — CODEC_TO_HPHONE_HS3_CONN 31

DZ4600 6.8V-100PF 01005 ROOM=DOCK_B2B NO_XNET_CONNECTION=1

C4699 220PF 10% 10V X7R-CERM 01005 ROOM=DOCK_B2B

FL4601 FERR-33-OHM-0.8A-0.09-OHM 0201 ROOM=DOCK_B2B

23 BI CODEC_TO_HPHONE_HS4 — CODEC_TO_HPHONE_HS4_CONN 31

DZ4601 6.8V-100PF 01005 ROOM=DOCK_B2B NO_XNET_CONNECTION=1

C4698 220PF 10% 10V X7R-CERM 01005 ROOM=DOCK_B2B

FL4602 600-OHM-25%-0.28A-0.750HM 0201 ROOM=DOCK_B2B

23 OUT CODEC_TO_HPHONE_HS4_REF — CODEC_TO_HPHONE_HS4_REF_CONN 31

DZ4602 6.8V-100PF 01005 ROOM=DOCK_B2B NO_XNET_CONNECTION=1

FL4603 600-OHM-25%-0.28A-0.750HM 0201 ROOM=DOCK_B2B

23 OUT CODEC_TO_HPHONE_HS3_REF — CODEC_TO_HPHONE_HS3_REF_CONN 31

DZ4603 6.8V-100PF 01005 ROOM=DOCK_B2B NO_XNET_CONNECTION=1

FL4604 FERR-33-OHM-0.8A-0.09-OHM 0201 ROOM=DOCK_B2B

23 IN CODEC_TO_HPHONE_L — CODEC_TO_HPHONE_L_CONN 31

DZ4604 6.8V-100PF 01005 ROOM=DOCK_B2B NO_XNET_CONNECTION=1

C4697 220PF 10% 10V X7R-CERM 01005 ROOM=DOCK_B2B

FL4605 FERR-33-OHM-0.8A-0.09-OHM 0201 ROOM=DOCK_B2B

23 IN CODEC_TO_HPHONE_R — CODEC_TO_HPHONE_R_CONN 31

DZ4610 6.8V-100PF 01005 ROOM=DOCK_B2B NO_XNET_CONNECTION=1

C4696 220PF 10% 10V X7R-CERM 01005 ROOM=DOCK_B2B

## LOWER MIC1/4

FL4610 120-OHM-210MA 01005 ROOM=DOCK_B2B

23 OUT LOWERMIC1_TO_CODEC_AIN1_P — LOWERMIC1_TO_CODEC_AIN1_CONN_P 31

C4610 56PF 5% 16V NP0-C0G 01005 ROOM=DOCK_B2B

FL4611 120-OHM-210MA 01005 ROOM=DOCK_B2B

23 OUT LOWERMIC1_TO_CODEC_AIN1_N — LOWERMIC1_TO_CODEC_AIN1_CONN_N 31

C4611 56PF 5% 16V NP0-C0G 01005 ROOM=DOCK_B2B

FL4612 120-OHM-210MA 01005 ROOM=DOCK_B2B

24 PP_CODEC_TO_LOWERMIC1_BIAS — PP_CODEC_TO_LOWERMIC1_BIAS_CONN 31 VOLTAGE=2.86V

C4612 100PF 5% 16V NP0-C0G 01005 ROOM=DOCK_B2B

FL4613 120-OHM-210MA 01005 ROOM=DOCK_B2B

23 OUT LOWERMIC4_TO_CODEC_AIN2_P — LOWERMIC4_TO_CODEC_AIN2_CONN_P 31

C4613 56PF 5% 16V NP0-C0G 01005 ROOM=DOCK_B2B

FL4614 120-OHM-210MA 01005 ROOM=DOCK_B2B

23 OUT LOWERMIC4_TO_CODEC_AIN2_N — LOWERMIC4_TO_CODEC_AIN2_CONN_N 31

C4614 56PF 5% 16V NP0-C0G 01005 ROOM=DOCK_B2B

FL4615 120-OHM-210MA 01005 ROOM=DOCK_B2B

24 PP_CODEC_TO_LOWERMIC4_BIAS — PP_CODEC_TO_LOWERMIC4_BIAS_CONN 31 VOLTAGE=2.86V

C4615 100PF 5% 16V NP0-C0G 01005 ROOM=DOCK_B2B

## ANTENNA

FL4620 120-OHM-210MA 01005 ROOM=DOCK_B2B

33 30 27 19 15 PP3V0_TRISTAR — PP3V0_LAT_CONN 31 VOLTAGE=3.0V

C4620 100PF 5% 16V NP0-C0G 01005 ROOM=DOCK_B2B

FL4621 120-OHM-210MA 01005 ROOM=DOCK_B2B

33 30 27 24 16 15 14 12 8 PP1V8_SDRAM VOLTAGE=1.8V — PP1V8_LAT_CONN 31 VOLTAGE=1.8V

C4621 100PF 5% 16V NP0-C0G 01005 ROOM=DOCK_B2B

R4622 0.00 0% MF 1/32W 01005 ROOM=DOCK_B2B

33 IN RFFE5_BB_TO_ANT_SCLK — RFFE5_BB_TO_ANT_SCLK_CONN 31

C4622 56PF 5% 16V NP0-C0G 01005 ROOM=DOCK_B2B

R4623 0.00 0% MF 1/32W 01005 ROOM=DOCK_B2B

33 BI RFFE5_BB_TO_ANT_DATA — RFFE5_BB_TO_ANT_DATA_CONN 31

C4623 56PF 5% 16V NP0-C0G 01005 ROOM=DOCK_B2B

FL4624 120-OHM-210MA 01005 ROOM=DOCK_B2B

33 IN BB_LAT_GPIO1 — BB_LAT_GPIO1_CONN 31

C4624 56PF 5% 16V NP0-C0G 01005 ROOM=DOCK_B2B

FL4606 120-OHM-210MA 01005 ROOM=DOCK_B2B

8 BI AP_TO_HP_HS3_CTRL — AP_TO_HP_HS3_CTRL_CONN 31

C4606 100PF 5% 16V NP0-C0G 01005 ROOM=DOCK_B2B

FL4607 120-OHM-210MA 01005 ROOM=DOCK_B2B

8 IN AP_TO_HP_HS4_CTRL — AP_TO_HP_HS4_CTRL_CONN 31

C4607 100PF 5% 16V NP0-C0G 01005 ROOM=DOCK_B2B

## SPEAKER/ARC

FL4630 120-OHM-210MA 01005 ROOM=DOCK_B2B

25 OUT SPEAKER_TO_SPEAKERAMP_VSENSE_P — SPEAKER_TO_SPEAKERAMP_VSENSE_CONN_P 31

C4630 100PF 5% 16V NP0-C0G 01005 ROOM=DOCK_B2B

FL4631 120-OHM-210MA 01005 ROOM=DOCK_B2B

25 OUT SPEAKER_TO_SPEAKERAMP_VSENSE_N — SPEAKER_TO_SPEAKERAMP_VSENSE_CONN_N 31

C4631 100PF 5% 16V NP0-C0G 01005 ROOM=DOCK_B2B

FL4632 120-OHM-210MA 01005 ROOM=DOCK_B2B

26 OUT SOLENOID_TO_ARC_DRIVER_VSENSE_P — SOLENOID_TO_ARC_DRIVER_VSENSE_CONN_P 31

C4632 100PF 5% 16V NP0-C0G 01005 ROOM=DOCK_B2B

FL4633 120-OHM-210MA 01005 ROOM=DOCK_B2B

26 OUT SOLENOID_TO_ARC_DRIVER_VSENSE_N — SOLENOID_TO_ARC_DRIVER_VSENSE_CONN_N 31

C4633 100PF 5% 16V NP0-C0G 01005 ROOM=DOCK_B2B

31 25 SPEAKERAMP_TO_SPEAKER_OUT_POS

C4634 220PF 10% 10V X7R-CERM 01005 ROOM=DOCK_B2B

31 25 SPEAKERAMP_TO_SPEAKER_OUT_NEG

C4635 220PF 10% 10V X7R-CERM 01005 ROOM=DOCK_B2B

# DOCK FLEX CONNECTOR

THIS ONE ON MLB ---> 516S00033 (RCPT)
516S00034 (PLUG)

CRITICAL ROOM=DOCK_B2B
J4600 24-5859-040-XXX-829 F-ST-SM

| | | | | |
|---|---|---|---|---|
| 31 25 | SPEAKERAMP_TO_SPEAKER_OUT_POS | 1 | 2 | SPEAKERAMP_TO_SPEAKER_OUT_NEG 25 31 |
| 31 | SPEAKER_TO_SPEAKERAMP_VSENSE_CONN_P | 3 | 4 | SPEAKER_TO_SPEAKERAMP_VSENSE_CONN_N 31 |
| 31 26 | ARC_DRIVER_TO_SOLENOID_OUT_POS | 5 | 6 | ARC_DRIVER_TO_SOLENOID_OUT_NEG 26 31 |
| 31 | SOLENOID_TO_ARC_DRIVER_VSENSE_CONN_P | 7 | 8 | SOLENOID_TO_ARC_DRIVER_VSENSE_CONN_N 31 |
| 31 | AP_TO_HP_HS4_CTRL_CONN | 9 | 10 | CODEC_TO_HPHONE_L_CONN 31 |
| 31 | HPHONE_TO_CODEC_DETECT_CONN | 11 | 12 | CODEC_TO_HPHONE_R_CONN 31 |
| 31 | CODEC_TO_HPHONE_HS4_REF_CONN | 13 | 14 | CODEC_TO_HPHONE_HS4_CONN 31 |
| 31 | AP_TO_HP_HS3_CTRL_CONN | 15 | 16 | |
| 31 | CODEC_TO_HPHONE_HS3_REF_CONN | 17 | 18 | CODEC_TO_HPHONE_HS3_CONN 31 |
| 31 | LOWERMIC1_TO_CODEC_AIN1_CONN_N | 19 | 20 | LOWERMIC1_TO_CODEC_AIN1_CONN_P 31 |
| 31 | PP_CODEC_TO_LOWERMIC1_BIAS_CONN | 21 | 22 | PP_TRISTAR_ACC1_CONN 31 |
| 24 OUT | LOWERMIC1_BIAS_FILT_RET | 23 | 24 | |
| 31 | RFFE5_BB_TO_ANT_DATA_CONN | 25 | 26 | TRISTAR_DP1_CONN_P |
| 31 | PP1V8_LAT_CONN | 27 | 28 | TRISTAR_DP1_CONN_N BI 3 30 |
| 31 | TRISTAR_CON_DETECT_CONN_L | 29 | 30 | |
| 31 | RFFE5_BB_TO_ANT_SCLK_CONN | 31 | 32 | TRISTAR_DP2_CONN_N BI 3 30 |
| 31 | BB_LAT_GPIO1_CONN | 33 | 34 | TRISTAR_DP2_CONN_P BI 3 30 |
| 31 | PP3V0_LAT_CONN | 35 | 36 | PP_TRISTAR_ACC2_CONN 31 |
| 24 OUT | LOWERMIC4_BIAS_FILT_RET | 37 | 38 | PP_CODEC_TO_LOWERMIC4_BIAS_CONN 31 |
| 31 | LOWERMIC4_TO_CODEC_AIN2_CONN_N | 39 | 40 | LOWERMIC4_TO_CODEC_AIN2_CONN_P 31 |

45 41 42 43 44 46

30 17 7 PP5V0_USB VOLTAGE=5.0V

C4650 0.1UF 10% 25V X5R 0201 ROOM=DOCK_B2B

C4651 0.1UF 10% 25V X5R 0201 ROOM=DOCK_B2B

C4652 0.1UF 10% 25V X5R 0201 ROOM=DOCK_B2B

NOSTUFF C4654 100PF 5% 35V NP0-C0G 01005 ROOM=DOCK_B2B

C4653 56PF 5% 25V NP0-C0G-CERM 01005 ROOM=DOCK_B2B

C4655 220PF 10% 35V X7R-CERM 0201 ROOM=DOCK_B2B

DEFAULT_CAPACITOR_220.000000pF_2_1

C4656 100PF 5% 35V NP0-C0G 01005 ROOM=DOCK_B2B

## TRISTAR

30 3 OUT TRISTAR_CON_DETECT_L — TRISTAR_CON_DETECT_CONN_L 31

R4640 1.00K 5% MF 1/32W 01005 ROOM=DOCK_B2B

C4640 27PF 5% 16V NP0-C0G 01005 ROOM=DOCK_B2B

FL4641 10-OHM-1.1A 01005 ROOM=DOCK_B2B

30 3 PP_TRISTAR_ACC1 — PP_TRISTAR_ACC1_CONN 31 VOLTAGE=4.3V

C4641 100PF 5% 16V NP0-C0G 01005 ROOM=DOCK_B2B

FL4642 10-OHM-1.1A 01005 ROOM=DOCK_B2B

30 3 PP_TRISTAR_ACC2 — PP_TRISTAR_ACC2_CONN 31 VOLTAGE=4.3V

C4642 100PF 5% 16V NP0-C0G 01005 ROOM=DOCK_B2B

31 26 ARC_DRIVER_TO_SOLENOID_OUT_POS

C4636 100PF 5% 16V NP0-C0G 01005 ROOM=DOCK_B2B

31 26 ARC_DRIVER_TO_SOLENOID_OUT_NEG

C4637 100PF 5% 16V NP0-C0G 01005 ROOM=DOCK_B2B

20190?-王敬恒

SYNC_MASTER=N/A SYNC_DATE=N/A

PAGE TITLE: I/O:DOCK FLEX B2B

Apple Inc.

DRAWING NUMBER: 051-1902 SIZE: D

REVISION: A.0.0

BRANCH

PAGE: 46 OF 49

SHEET: 31 OF 59

NOTICE OF PROPRIETARY PROPERTY:
THE INFORMATION CONTAINED HEREIN IS THE PROPRIETARY PROPERTY OF APPLE INC.
THE POSESSOR AGREES TO THE FOLLOWING:
I TO MAINTAIN THIS DOCUMENT IN CONFIDENCE
II NOT TO REPRODUCE OR COPY IT
III NOT TO REVEAL OR PUBLISH IT IN WHOLE OR PART
IV ALL RIGHTS RESERVED

# BUTTON FLEX

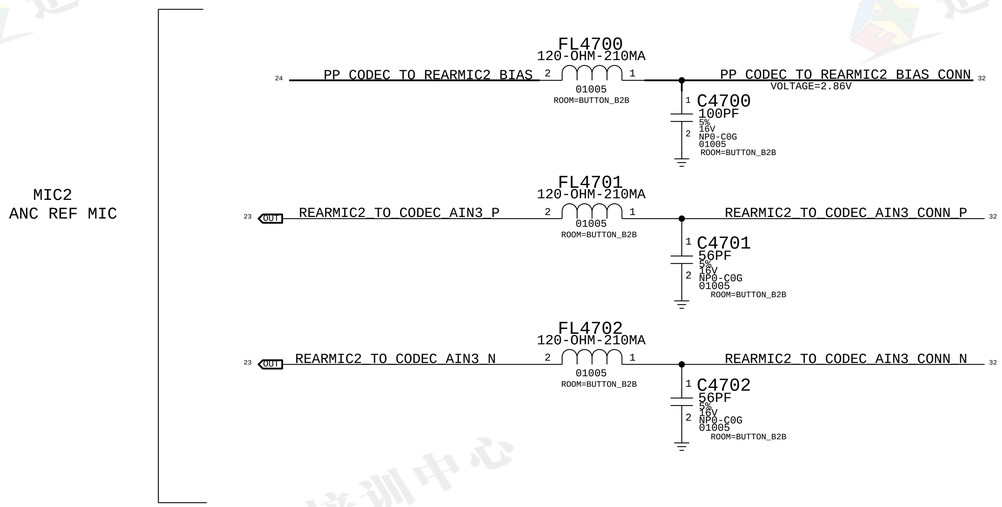


## BUTTON FLEX CONNECTOR

THIS ONE ON MLB ---> 516S00058 (RCPT)
516S00059 (PLUG)

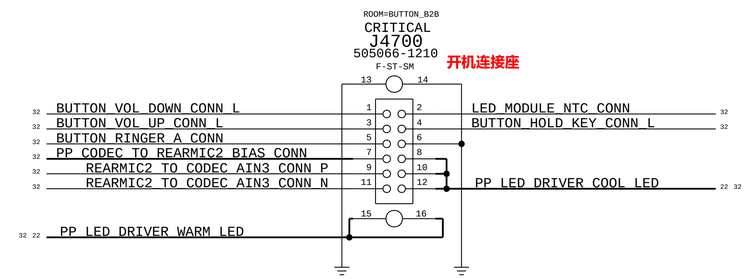


201907-王敬恒

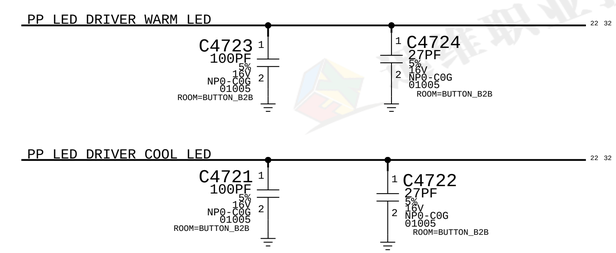


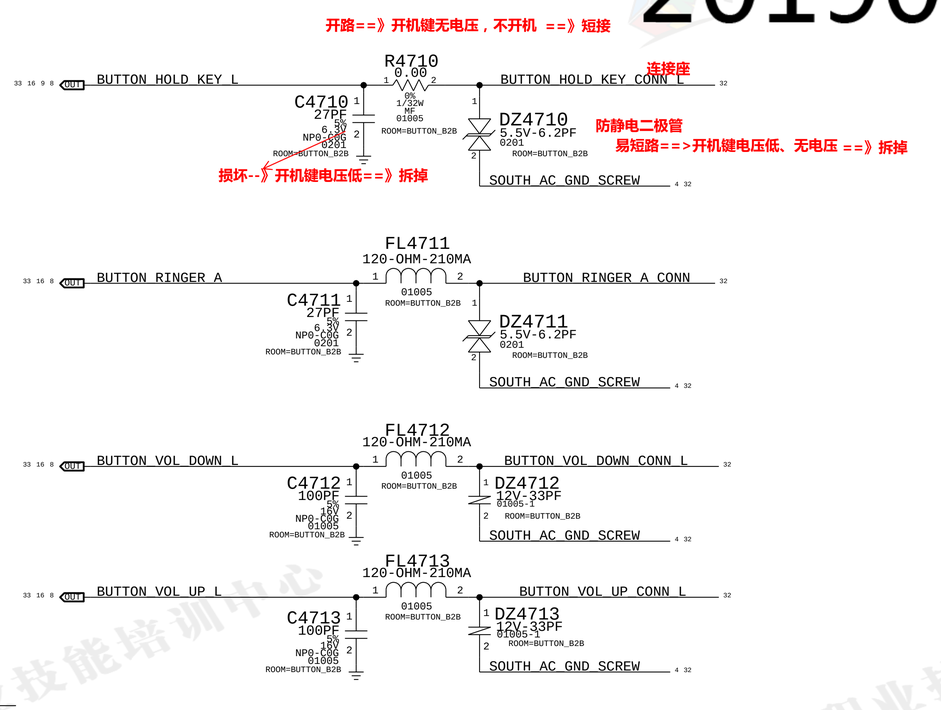


BUTTONS:
HOLD
RINGER
VOL UP/DOWN

STROBE:
WARM LED
COOL LED
MODULE NTC

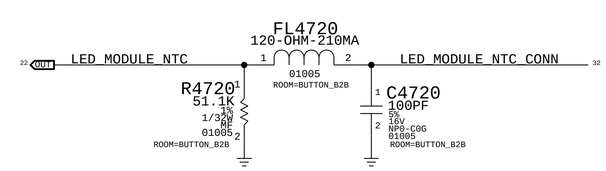


SYNC_MASTER=N/A SYNC_DATE=N/A

PAGE TITLE
I/O:BUTTON FLEX B2B

Apple Inc.

DRAWING NUMBER 051-1902 SIZE D
REVISION A.0.0
BRANCH
PAGE 47 OF 49
SHEET 32 OF 59

NOTICE OF PROPRIETARY PROPERTY:
THE INFORMATION CONTAINED HEREIN IS THE PROPRIETARY PROPERTY OF APPLE INC.
THE POSESSOR AGREES TO THE FOLLOWING:
I TO MAINTAIN THIS DOCUMENT IN CONFIDENCE
II NOT TO REPRODUCE OR COPY IT
III NOT TO REVEAL OR PUBLISH IT IN WHOLE OR PART
IV ALL RIGHTS RESERVED

# BASEBAND, WLAN, BT & STOCKHOLM

I456

## RADIO_MLB_MIMO

### SHARED POWER

SUBDESIGN_SUFFIX=RF

| | |
|---|---|
| PP_VCC_MAIN | 28 27 26 25 24 22 21 17 15 14 |
| PP3V0_TRISTAR | 31 30 27 19 15 |
| PP1V8_SDRAM | 31 30 27 24 16 15 14 12 8 |

### BASEBAND

| | | |
|---|---|---|
| PCIE0_AP_TO_BB_TX_P | IN | 6 |
| PCIE0_AP_TO_BB_TX_N | IN | 6 |
| PCIE0_BB_TO_AP_TX_P | OUT | 6 |
| PCIE0_BB_TO_AP_TX_N | OUT | 6 |
| PCIE0_AP_TO_BB_REFCLK_P | IN | 6 |
| PCIE0_AP_TO_BB_REFCLK_N | IN | 6 |
| PCIE0_AP_TO_BB_PERST_L | IN | 6 |
| PCIE0_AP_TO_BB_CLKREQ_L | BI | 6 |
| PCIE0_BB_TO_PMU_HOST_WAKE_L | OUT | 16 |
| PCIE0_AP_TO_BB_DEV_WAKE | IN | 8 |
| I2S_AP_TO_BB_WS | IN | 8 |
| I2S_AP_TO_BB_CLK | IN | 8 |
| I2S_AP_TO_BB_TX | IN | 8 |
| I2S_BB_TO_AP_TX | OUT | 8 |
| AP_TO_BBPMU_RADIO_ON_L | IN | 8 |
| PMU_TO_BBPMU_RESET_L | IN | 16 |
| AP_TO_BB_RST_L | IN | 8 |
| BB_TO_AP_RESET_DET_L | OUT | 8 |
| BB_TO_AP_GSM_TXBURST_IND | OUT | 27 22 |
| AP_TO_BB_MESA_ON_L | IN | 8 |
| BB_TO_AP_GPS_TIME_MARK | IN | 8 |
| AP_TO_BB_COREDUMP_TRIG | IN | 8 |
| AP_TO_BB_IPC_GPIO | IN | 8 |
| TOUCH_TO_PMU_FORCE | IN | 29 9 8 |
| UART0_OWL_TO_BB_TX | IN | 9 |
| UART0_BB_TO_OWL_TX | OUT | 9 |
| USB_BB_P | BI | 30 |
| USB_BB_N | BI | 30 |
| USB_BB_VBUS_DETECT | IN | 16 |
| SWD_CLK_BB_JTAG_TCK | IN | 13 9 |
| SWD_IO_BB_JTAG_TMS | BI | 9 |
| 75_RFFE5_SCLK_BB | OUT | 31 |
| 75_RFFE5_SDATA_BB | BI | 31 |
| RFFE_BUFFER_LAT_GPIO1 | OUT | 31 |
| BB_TO_PMU_AMUX_LDO11_SIM1 | OUT | 16 |
| BB_TO_PMU_AMUX_SMPS1 | OUT | 16 |
| BB_TO_PMU_AMUX_SMPS3 | OUT | 16 |
| BB_TO_PMU_AMUX_SMPS4 | OUT | 16 |

### ANT

| | | |
|---|---|---|
| 50_UPPER_ANT_FEED | OUT | 4 |
| 50_WIFI_5G_CONN_ANT | OUT | 4 |
| STOCKHOLM_ANT | OUT | 4 |

### AP DEBUG

| | | |
|---|---|---|
| PP1V8 | IN | 21 20 17 14 13 12 9 8 7 6 5 3 29 |
| DFU_STATUS | IN | 8 3 |
| FORCE_DFU | OUT | 8 3 |
| PMU_AMUX_AY | NC | |
| PMU_AMUX_BY | NC | |
| PMU_TO_SYSTEM_COLD_RESET_L | OUT | 16 9 5 3 |
| I2C0_AP_SCL | BI | 27 16 8 |
| I2C0_AP_SDA | BI | 27 16 8 |
| I2C1_AP_SCL | BI | 30 26 25 17 8 |
| I2C1_AP_SDA | BI | 30 26 25 17 8 |
| BUTTON_HOLD_KEY_L | OUT | 32 16 9 8 |
| BUTTON_MENU_KEY_L | OUT | 28 16 9 8 |
| BUTTON_RINGER_A | OUT | 32 16 8 |
| BUTTON_VOL_DOWN_L | OUT | 32 16 8 |
| BUTTON_VOL_UP_L | OUT | 32 16 8 |
| PMU_GPIO20 | NC | |
| PMU_GPIO21 | NC | |
| AP_RESERVED0 | IN | 30 8 |
| AP_RESERVED1 | OUT | 30 8 |
| AP_RESERVED2 | NC | |

### WLAN

| | | |
|---|---|---|
| PCIE_AP_TO_WLAN_TX_P | PCIE_AP_TO_WLAN_TXD_P | IN 6 |
| PCIE_AP_TO_WLAN_TX_N | PCIE_AP_TO_WLAN_TXD_N | IN 6 |
| PCIE_WLAN_TO_AP_TX_P | PCIE_WLAN_TO_AP_RXD_P | OUT 6 |
| PCIE_WLAN_TO_AP_TX_N | PCIE_WLAN_TO_AP_RXD_N | OUT 6 |
| PCIE_AP_TO_WLAN_REFCLK_P | PCIE_AP_TO_WLAN_REFCLK_P | IN 6 |
| PCIE_AP_TO_WLAN_REFCLK_N | PCIE_AP_TO_WLAN_REFCLK_N | IN 6 |
| PCIE_AP_TO_WLAN_PERST_L | PCIE_AP_TO_WLAN_RESET_L | IN 6 |
| PCIE_AP_TO_WLAN_DEV_WAKE | PCIE_AP_TO_WLAN_DEV_WAKE | IN 8 |
| PCIE_WLAN_TO_AP_CLKREQ_L | PCIE_WLAN_TO_AP_CLKREQ_L | BI 6 |
| UART4_AP_TO_WLAN_TX | UART_AP_TO_WLAN_TXD | IN 8 |
| UART4_AP_TO_WLAN_RTS_L | UART_AP_TO_WLAN_RTS_L | IN 8 |
| UART4_WLAN_TO_AP_TX | UART_WLAN_TO_AP_RXD | OUT 8 |
| UART4_WLAN_TO_AP_RTS_L | UART_WLAN_TO_AP_CTS_L | OUT 8 |
| PMU_TO_WLAN_32K_CLK | PMU_TO_WLAN_CLK32K | IN 16 |
| PMU_TO_WLAN_REG_ON | PMU_TO_WLAN_REG_ON | IN 16 |
| WLAN_TO_PMU_HOST_WAKE | WLAN_TO_PMU_HOST_WAKE | OUT 16 |
| OWL_TO_WLAN_CONTEXT_A | OWL_TO_WLAN_CONTEXT_A | IN 9 |
| OWL_TO_WLAN_CONTEXT_B | OWL_TO_WLAN_CONTEXT_B | IN 9 |

### BLUETOOTH

| | | |
|---|---|---|
| I2S_AP_TO_BT_LRCK | I2S_AP_TO_BT_LRCLK | IN 8 |
| I2S_AP_TO_BT_BCLK | I2S_AP_TO_BT_BCLK | IN 8 |
| I2S_AP_TO_BT_DOUT | I2S_AP_TO_BT_DOUT | IN 8 |
| I2S_BT_TO_AP_DOUT | I2S_BT_TO_AP_DIN | OUT 8 |
| UART1_AP_TO_BT_TX | UART_AP_TO_BT_TXD | IN 8 |
| UART1_AP_TO_BT_RTS_L | UART_AP_TO_BT_RTS_L | IN 8 |
| UART1_BT_TO_AP_TX | UART_BT_TO_AP_RXD | OUT 8 |
| UART1_BT_TO_AP_RTS_L | UART_BT_TO_AP_CTS_L | OUT 8 |
| PMU_TO_BT_REG_ON | PMU_TO_BT_REG_ON | IN 16 |
| BT_TO_PMU_HOST_WAKE | BT_TO_PMU_HOST_WAKE | OUT 16 |
| AP_TO_BT_WAKE | AP_TO_BT_WAKE | IN 8 |

### STOCKHOLM

| | | |
|---|---|---|
| UART3_AP_TO_STOCKHOLM_TXD | UART_AP_TO_STOCKHOLM_TXD | IN 8 |
| UART3_AP_TO_STOCKHOLM_RTS_L | UART_AP_TO_STOCKHOLM_RTS_L | IN 8 |
| UART3_STOCKHOLM_TO_AP_TXD | UART_STOCKHOLM_TO_AP_RXD | OUT 8 |
| UART3_STOCKHOLM_TO_AP_RTS_L | UART_STOCKHOLM_TO_AP_CTS_L | OUT 8 |
| PMU_TO_STOCKHOLM_EN | PMU_TO_STOCKHOLM_EN | IN 16 |
| STOCKHOLM_TO_PMU_HOST_WAKE | STOCKHOLM_TO_PMU_HOST_WAKE | OUT 16 |
| AP_TO_STOCKHOLM_DEV_WAKE | AP_TO_STOCKHOLM_DEV_WAKE | IN 8 |
| AP_TO_STOCKHOLM_FW_DWLD_REQ | AP_TO_STOCKHOLM_DWLD_REQUEST | IN 7 |

MIS-NAMED NET. GPS_TIME_MARK ACTUALLY GOES FROM AP TO BB.

201907-王敬恒

迅维职业技能培训中心

PAGE TITLE: BASEBAND:RADIO SYMBOL

Apple Inc.

DRAWING NUMBER: 051-1902 | SIZE: D

REVISION: A.0.0

BRANCH:

PAGE: 49 OF 49

SHEET: 33 OF 59

NOTICE OF PROPRIETARY PROPERTY:
THE INFORMATION CONTAINED HEREIN IS THE PROPRIETARY PROPERTY OF APPLE INC.
THE POSESSOR AGREES TO THE FOLLOWING:
I TO MAINTAIN THIS DOCUMENT IN CONFIDENCE
II NOT TO REPRODUCE OR COPY IT
III NOT TO REVEAL OR PUBLISH IT IN WHOLE OR PART
IV ALL RIGHTS RESERVED

1. ALL RESISTANCE VALUES ARE IN OHMS, 0.1 WATT +/- 5%.
2. ALL CAPACITANCE VALUES ARE IN MICROFARADS.
3. ALL CRYSTALS & OSCILLATOR VALUES ARE IN HERTZ.

| REV | ECN | DESCRIPTION OF REVISION | CK APPD / DATE |
|---|---|---|---|
| A | 0004536627 | PRODUCTION RELEASED | 2015-07-21 |

# N71 RADIO_MLB_MIMO - PVT
# JULY 07, 2015

201907王敬恒


| PDF PAGE | CSA PAGE | CONTENTS |
|---|---|---|
| 2 | 2 | ELNA & UAT ANT FEED |
| 3 | 3 | FE: ANT CONNECTORS AND UAT TUNER |
| 4 | 30 | DEBUG CONN & TEST POINTS |
| 5 | 31 | CELLULAR BASEBAND: POWER1 |
| 6 | 32 | CELLULAR BASEBAND: POWER2 |
| 7 | 33 | CELLULAR BASEBAND: CONTROL AND INTERFACES |
| 8 | 34 | CELLULAR BASEBAND: GPIOS |
| 9 | 35 | CELLULAR PMU: CONTROL AND CLOCKS |
| 10 | 36 | CELLULAR PMU: SWITCHERS AND LDOS |
| 11 | 37 | CELLULAR PMU: ET MODULATOR |
| 12 | 38 | CELLULAR TRANSCEIVER: POWER |
| 13 | 39 | CELLULAR TRANSCEIVER: PRX PORTS |
| 14 | 40 | CELLULAR TRANSCEIVER: DRX/GPS PORTS |
| 15 | 41 | CELLULAR TRANSCEIVER: TX PORTS |
| 16 | 42 | CELLULAR FRONT END: LB PAD |
| 17 | 43 | CELLULAR FRONT END: MB PAD |
| 18 | 44 | CELLULAR FRONT END: HB PAD |
| 19 | 45 | CELLULAR FRONT END: 2G PA |
| 20 | 46 | CELLULAR FRONT END: LB ASM |
| 21 | 47 | CELLULAR FRONT END: MB-HB ASM |
| 22 | 48 | CELLULAR FRONT END: DIVERSITY |
| 23 | 49 | SIM |
| 24 | 50 | WIFI/BT: WIFI/BT MODULE |
| 25 | 51 | STOCKHOLM |


## ROW/RF2 HB PAD MATCHING BOM OPTIONS

| PART# | QTY | DESCRIPTION | REFERENCE DESIGNATOR(S) | BOM OPTION |
|---|---|---|---|---|
| 152S1907 | 1 | 3.3NH, INDUCTOR | L4105_RF | ROW |
| 152S1990 | 1 | 3.0NH, INDUCTOR | L4105_RF | RF2 |
| 131S0377 | 1 | 1.2PF, CAPACITOR | C4108_RF | RF2 |
| 152S2007 | 1 | 8.2NH, INDUCTOR | L4401_RF | ROW |
| 131S0426 | 1 | 22PF, CAPACITOR | C4405_RF | ROW |
| 152S2001 | 1 | 2.4NH, INDUCTOR | C4405_RF | RF2 |
| 131S0631 | 1 | 0.3PF, CAPACITOR | L4406_RF | RF2 |
| 152S2044 | 1 | 2.2NH, INDUCTOR | C4406_RF | ROW |
| 152S2021 | 1 | 1.5NH, INDUCTOR | C4406_RF | RF2 |
| 131S0631 | 1 | 0.3PF, CAPACITOR | L4407_RF | ROW |
| 152S2056 | 1 | 5.6NH, INDUCTOR | L4403_RF | ROW |
| 131S0429 | 1 | 8.2PF, CAPACITOR | C4407_RF | ROW |
| 152S2036 | 1 | 2.5NH, INDUCTOR | C4407_RF | RF2 |
| 131S0631 | 1 | 0.3PF, CAPACITOR | L4408_RF | RF2 |
| 152S00143 | 1 | 15NH, INDUCTOR | L4404_RF | ROW |
| 131S0823 | 1 | 33PF, CAPACITOR | C4408_RF | ROW |
| 152S2051 | 1 | 1.3NH, INDUCTOR | C4408_RF | RF2 |
| 152S2042 | 1 | 1.8NH, INDUCTOR | C4409_RF | RF2 |
| 117S0108 | 1 | 51 OHM, RESISTOR | L4410_RF | ROW |
| 131S0363 | 1 | 0.6PF, CAPACITOR | L4410_RF | RF2 |
| 152S00052 | [illegible] | [illegible] | [illegible] | ROW |
| 152S00026 | 1 | 1.5NH, INDUCTOR | [illegible] | RF2 |
| [illegible] | 1 | 1.8NH, INDUCTOR | L3911_RF | ROW |
| 117S0201 | 1 | [illegible] OHM, RESISTOR | L3911_RF | RF2 |
| 131S0279 | 1 | 1.3PF, CAPACITOR | L3919_RF | ROW |
| 152S2045 | 1 | 3.0NH, INDUCTOR | L3919_RF | RF2 |
| 152S00052 | 1 | 3.4NH, INDUCTOR | L3912_RF | RF2 |
| 131S0599 | 1 | 1.5PF, CAPACITOR | C3922_RF | RF2 |
| 131S0630 | 1 | 27PF, CAPACITOR | C3911_RF | RF2 |

## LB PAD

| PART# | QTY | DESCRIPTION | REFERENCE DESIGNATOR(S) | BOM OPTION |
|---|---|---|---|---|
| 353S00461 | 1 | IC,PWR AMP,LB_PAD,SKWS | ULBPA_RF | ROW |
| 353S00461 | 1 | IC,PWR AMP,LB_PAD,SKWS | ULBPA_RF | RF2 |
| 353S00461 | 1 | IC,PWR AMP,LB_PAD,SKWS | ULBPA_RF | RFC |
| 353S00541 | 1 | IC,PWR AMP,LB_PAD,PT | ULBPA_RF | DARWIN |

## MB PAD

| PART# | QTY | DESCRIPTION | REFERENCE DESIGNATOR(S) | BOM OPTION |
|---|---|---|---|---|
| 353S4495 | 1 | IC,PWR AMP,MB_PAD | UMBPA_RF | ROW |
| 353S4495 | 1 | IC,PWR AMP,MB_PAD | UMBPA_RF | RF2 |
| 353S4495 | 1 | IC,PWR AMP,MB_PAD | UMBPA_RF | RFC |
| 353S00477 | 1 | IC,PWR AMP,MB_PAD, PT | UMBPA_RF | DARWIN |

## RFC HB PAD MATCHING BOM OPTIONS

| PART# | QTY | DESCRIPTION | REFERENCE DESIGNATOR(S) | BOM OPTION |
|---|---|---|---|---|
| 152S1907 | 1 | 3.3NH, INDUCTOR | L4105_RF | RFC |
| 152S2007 | 1 | 8.2NH, INDUCTOR | L4401_RF | RFC |
| 131S0426 | 1 | 22PF, CAPACITOR | C4405_RF | RFC |
| 152S2044 | 1 | 2.2NH, INDUCTOR | C4406_RF | RFC |
| 131S0631 | 1 | 0.3PF, CAPACITOR | L4407_RF | RFC |
| 152S2056 | 1 | 5.6NH, INDUCTOR | L4403_RF | RFC |
| 131S0429 | 1 | 8.2PF, CAPACITOR | C4407_RF | RFC |
| 152S00143 | 1 | 15NH, INDUCTOR | L4404_RF | RFC |
| 131S0823 | 1 | 33PF, CAPACITOR | C4408_RF | RFC |
| 117S0108 | 1 | 51 OHM, RESISTOR | L4410_RF | RFC |
| 152S00052 | 1 | 3.4NH, INDUCTOR | L3910_RF | RFC |
| 152S2039 | 1 | 3.8NH, INDUCTOR | L3911_RF | RFC |
| 131S0279 | 1 | 1.3PF, CAPACITOR | L3919_RF | RFC |

## DARWIN HB PAD MATCHING BOM OPTIONS

| PART# | QTY | DESCRIPTION | REFERENCE DESIGNATOR(S) | BOM OPTION |
|---|---|---|---|---|
| 152S1907 | 1 | 3.3NH, INDUCTOR | L4105_RF | DARWIN |
| 152S2007 | 1 | 8.2NH, INDUCTOR | L4401_RF | DARWIN |
| 131S0426 | 1 | 22PF, CAPACITOR | C4405_RF | DARWIN |
| 152S2044 | 1 | 2.2NH, INDUCTOR | C4406_RF | DARWIN |
| 131S0631 | 1 | 0.3PF, CAPACITOR | L4407_RF | DARWIN |
| 152S2056 | 1 | 5.6NH, INDUCTOR | L4403_RF | DARWIN |
| 131S0429 | 1 | 8.2PF, CAPACITOR | C4407_RF | DARWIN |
| 152S00143 | 1 | 15NH, INDUCTOR | L4404_RF | DARWIN |
| 131S0823 | 1 | 33PF, CAPACITOR | C4408_RF | DARWIN |
| 117S0108 | 1 | 51 OHM, RESISTOR | L4410_RF | DARWIN |
| 152S00052 | 1 | 3.4NH, INDUCTOR | L3910_RF | DARWIN |
| 152S2039 | 1 | 3.8NH, INDUCTOR | L3911_RF | DARWIN |
| 131S0279 | 1 | 1.3PF, CAPACITOR | L3919_RF | DARWIN |

## LAT DIPLEXER1

| PART# | QTY | DESCRIPTION | REFERENCE DESIGNATOR(S) | BOM OPTION |
|---|---|---|---|---|
| 155S0971 | 1 | LAT CELL DIPLEXER1,TDK | FLDIP_RF | ROW |
| 155S0971 | 1 | LAT CELL DIPLEXER1,TDK | FLDIP_RF | RF2 |
| 155S0971 | 1 | LAT CELL DIPLEXER1,TDK | FLDIP_RF | RFC |
| 155S0971 | 1 | LAT CELL DIPLEXER1,TDK | FLDIP_RF | DARWIN |

## HB PAD

| PART# | QTY | DESCRIPTION | REFERENCE DESIGNATOR(S) | BOM OPTION |
|---|---|---|---|---|
| 353S00376 | 1 | IC,PWR AMP,HB_PAD,TQS | UHBPA_RF | ROW |
| 353S4494 | 1 | IC,PWR AMP,HB_PAD,AVAGO | UHBPA_RF | RF2 |
| 353S00376 | 1 | IC,PWR AMP,HB_PAD,TQS | UHBPA_RF | RFC |
| 353S00478 | 1 | IC,PWR AMP,HB_PAD,PT | UHBPA_RF | DARWIN |

## 19.2MHZ XTAL ALTERNATE

| PART NUMBER | ALTERNATE FOR PART NUMBER | BOM OPTION | REF DES | COMMENTS: |
|---|---|---|---|---|
| 197S0565 | 197S0593 | ALTERNATE | Y_XO_RF | XTAL, 19.2MHZ |
| 197S0598 | 197S0593 | ALTERNATE | Y_XO_RF | XTAL, 19.2MHZ |

## VINYL

| PART# | QTY | DESCRIPTION | REFERENCE DESIGNATOR(S) | BOM OPTION |
|---|---|---|---|---|
| 337S00176 | 1 | IC, VINYL | U5101_RF | ROW |
| 337S00176 | 1 | IC, VINYL | U5101_RF | RF2 |

## VINYL RESISTOR

| PART# | QTY | DESCRIPTION | REFERENCE DESIGNATOR(S) | BOM OPTION |
|---|---|---|---|---|
| 117S0161 | 1 | 0 OHM, RESISTOR | R3402_RF | RFC |
| 117S0161 | 1 | 0 OHM, RESISTOR | R3402_RF | DARWIN |

## HW_REV1_ID RESISTOR

| PART# | QTY | DESCRIPTION | REFERENCE DESIGNATOR(S) | BOM OPTION |
|---|---|---|---|---|
| 118S0646 | 1 | 51.1 KOHM, RESISTOR | R3503_RF | DARWIN |

## SIM ESD DIODE ALTERNATE

| PART NUMBER | ALTERNATE FOR PART NUMBER | BOM OPTION | REF DES | COMMENTS: |
|---|---|---|---|---|
| 377S00042 | 377S0163 | ALTERNATE | VR301_RF | ON SEMI ESD DIODE |

CONFIDENTIAL AND PROPRIETARY APPLE SYSTEM DESIGN. FOR REFERENCE PURPOSE ONLY - NOT A CHANGE REQUEST

?

DRAWING TITLE: SCHEM,SINGLE,BRD,N71

Apple Inc.

DRAWING NUMBER: 051-1902 SIZE: D

REVISION: A.0.0

NOTICE OF PROPRIETARY PROPERTY:
THE INFORMATION CONTAINED HEREIN IS THE PROPRIETARY PROPERTY OF APPLE INC.
THE POSESSOR AGREES TO THE FOLLOWING:
I TO MAINTAIN THIS DOCUMENT IN CONFIDENCE
II NOT TO REPRODUCE OR COPY IT
III NOT TO REVEAL OR PUBLISH IT IN WHOLE OR PART
IV ALL RIGHTS RESERVED

BRANCH

# N71-SPECIFIC RADIO PAGE 2

## DIVERSITY LNA

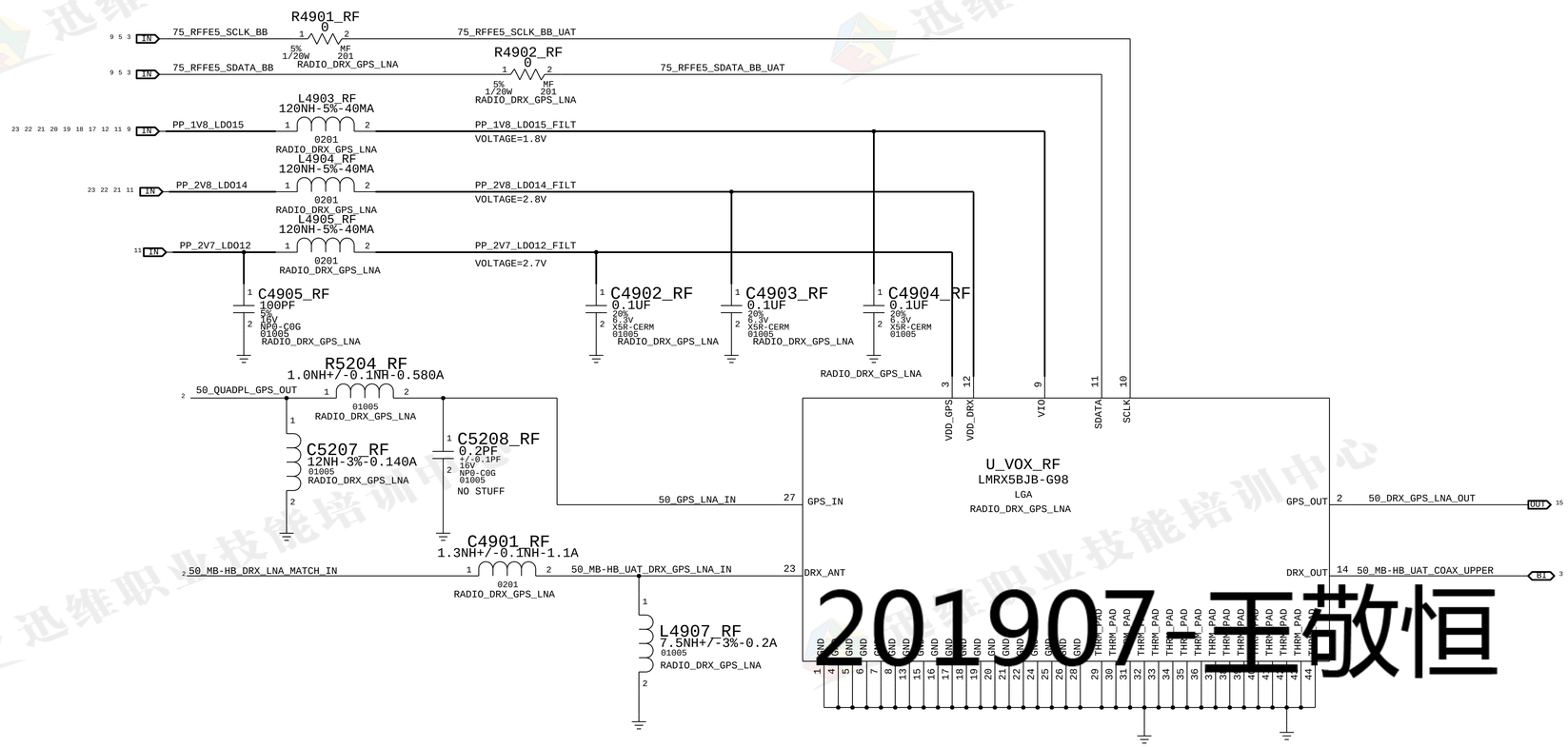


## WIFI ANT FEED

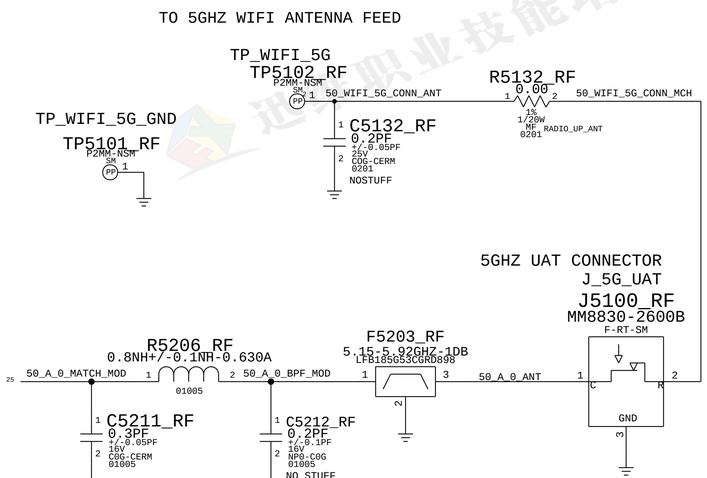


## UAT ANT FEED

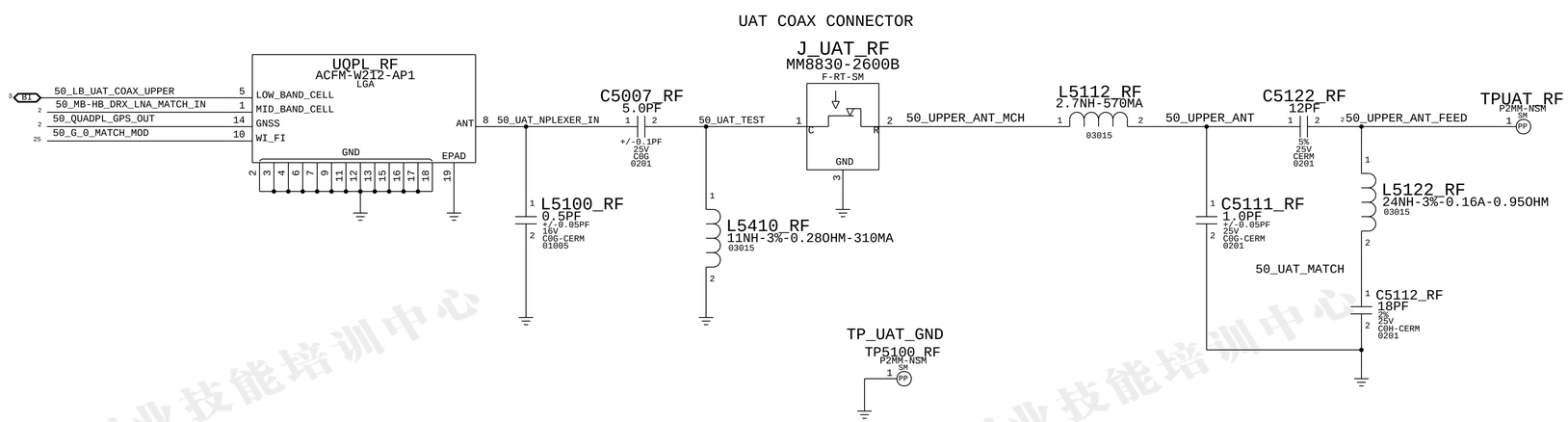


## ANT

50_UPPER_ANT_FEED
50_WIFI_5G_CONN_ANT

201907-王敬恒

CONFIDENTIAL AND PROPRIETARY APPLE SYSTEM DESIGN. FOR REFERENCE PURPOSE ONLY - NOT A CHANGE REQUEST

| | |
|---|---|
| PAGE TITLE | ELNA & UAT ANT FEED |
| Apple Inc. | DRAWING NUMBER 051-1902 SIZE D |
| | REVISION A.0.0 |
| NOTICE OF PROPRIETARY PROPERTY: THE INFORMATION CONTAINED HEREIN IS THE PROPRIETARY PROPERTY OF APPLE INC. THE POSESSOR AGREES TO THE FOLLOWING: I TO MAINTAIN THIS DOCUMENT IN CONFIDENCE II NOT TO REPRODUCE OR COPY IT III NOT TO REVEAL OR PUBLISH IT IN WHOLE OR PART IV ALL RIGHTS RESERVED | BRANCH |
| | PAGE 2 OF 51 |
| | SHEET 35 OF 59 |

# N71-SPECIFIC RADIO PAGE 3

## ANTENNA FEEDS AND CONNECTORS

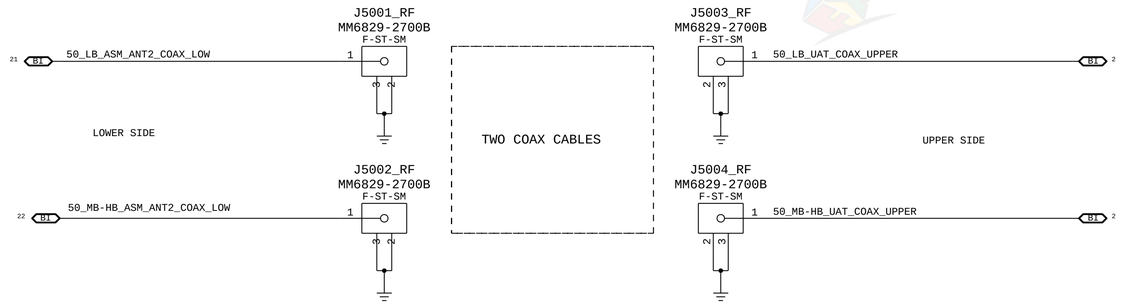


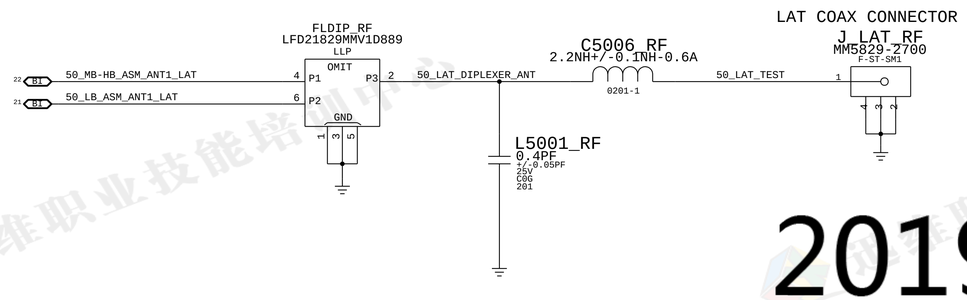


## UAT TUNER

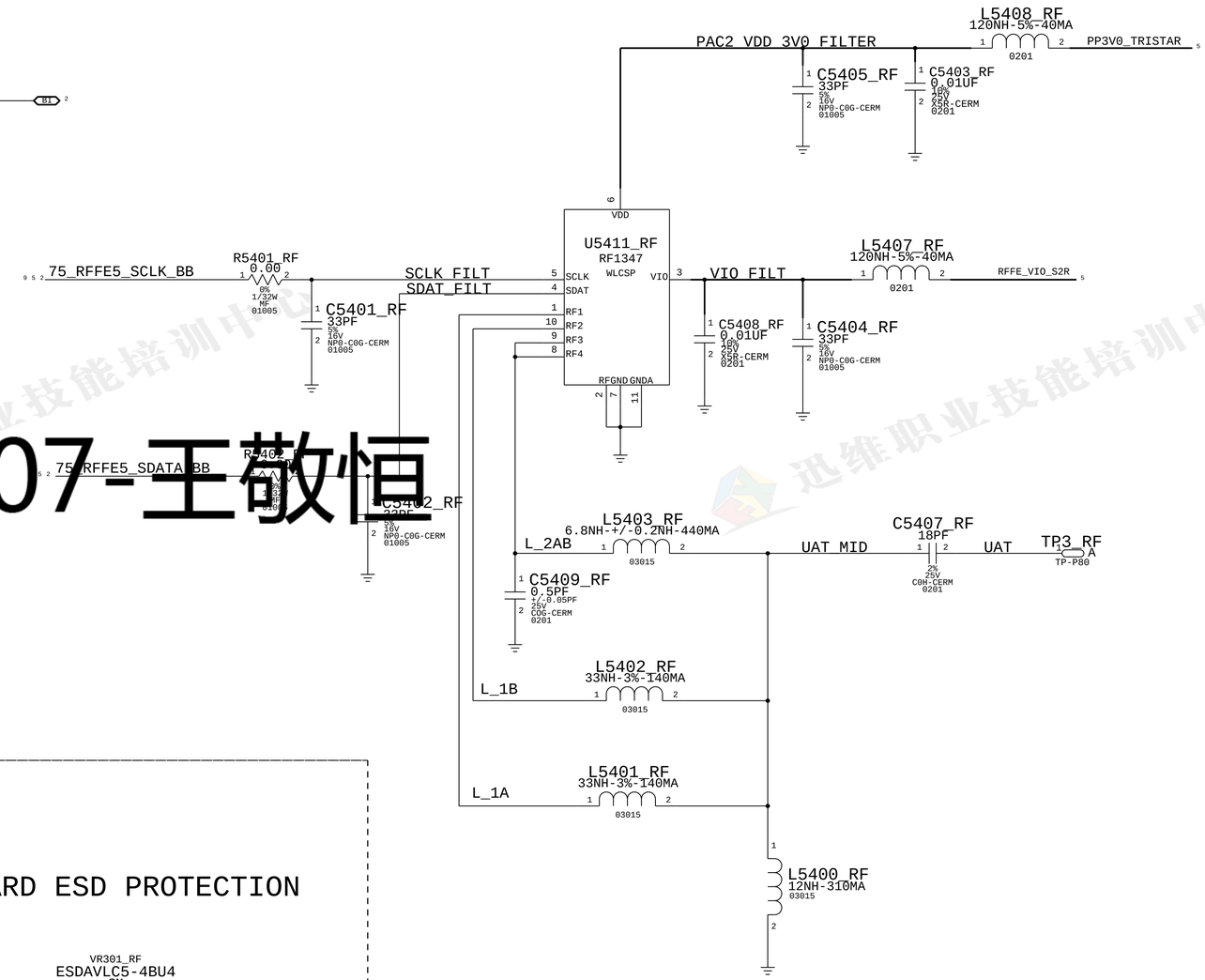


## SIM CARD CONNECTOR

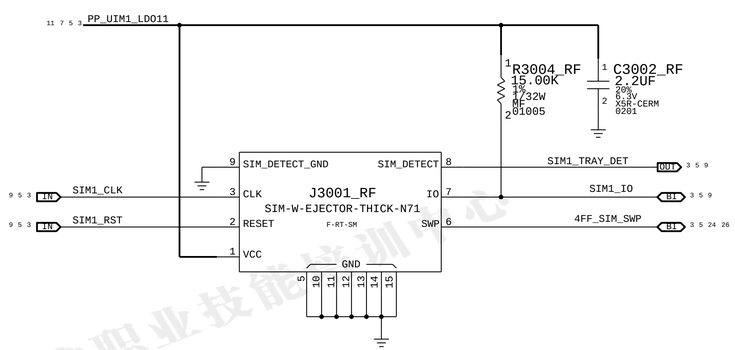


## SIM CARD ESD PROTECTION

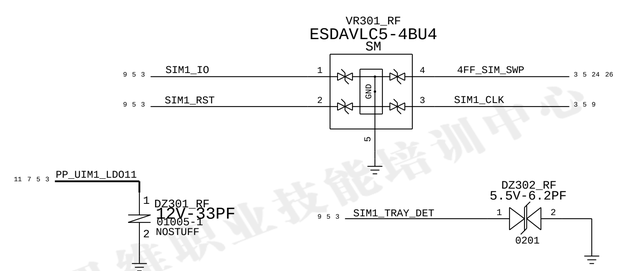


201907-王敬恒

| | |
|---|---|
| PAGE TITLE | FE: ANT CONNECTORS AND UAT TUNER |
| Apple Inc. | DRAWING NUMBER 051-1902 SIZE D |
| | REVISION A.0.0 |
| NOTICE OF PROPRIETARY PROPERTY: THE INFORMATION CONTAINED HEREIN IS THE PROPRIETARY PROPERTY OF APPLE INC. THE POSESSOR AGREES TO THE FOLLOWING: I TO MAINTAIN THIS DOCUMENT IN CONFIDENCE II NOT TO REPRODUCE OR COPY IT III NOT TO REVEAL OR PUBLISH IT IN WHOLE OR PART IV ALL RIGHTS RESERVED | BRANCH |
| | PAGE 3 OF 51 |
| | SHEET 36 OF 59 |

# N71-SPECIFIC RADIO PAGE 4

## WLAN LAT 2.4GHZ BAW BPF

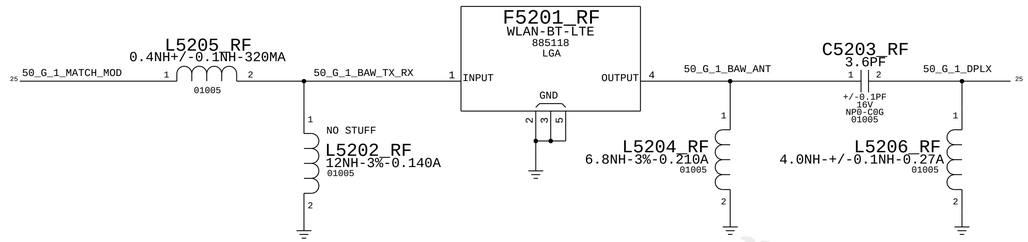


# 201907-王敬恒

| | |
|---|---|
| PAGE TITLE | WLAN LAT 2.4GHZ BAW BPF |
| | Apple Inc. |
| DRAWING NUMBER | 051-1902 |
| SIZE | D |
| REVISION | A.0.0 |
| BRANCH | |
| PAGE | 4 OF 51 |
| SHEET | 37 OF 59 |

NOTICE OF PROPRIETARY PROPERTY:
THE INFORMATION CONTAINED HEREIN IS THE PROPRIETARY PROPERTY OF APPLE INC.
THE POSESSOR AGREES TO THE FOLLOWING:
I TO MAINTAIN THIS DOCUMENT IN CONFIDENCE
II NOT TO REPRODUCE OR COPY IT
III NOT TO REVEAL OR PUBLISH IT IN WHOLE OR PART
IV ALL RIGHTS RESERVED

# AP TO BB/WLAN/BT/SH CONNECTIONS

## BASEBAND

| | | | |
|---|---|---|---|
| 26 25 20 18 17 12 11 | PP_VCC_MAIN | | IO |
| 10 | AP_TO_BBPMU_RADIO_ON_L | | IN |
| 10 5 | PMU_TO_BBPMU_RESET_L | | IN |
| 10 | AP_TO_BB_RST_L | | IN |
| 9 | BB_TO_AP_RESET_DET_L | SINGLE_NODENET | OUT |
| 9 5 | BB_TO_AP_GSM_TXBURST_IND | | OUT |
| 9 5 | AP_TO_BB_MESA_ON_L | | IN |
| 9 5 | BB_TO_AP_GPS_TIME_MARK | | OUT |
| 9 | AP_TO_BB_COREDUMP_TRIG | | IN |
| 9 | AP_TO_BB_IPC_GPIO | | IN |
| 10 | TOUCH_TO_BBPMU_FORCE_PWM | | IN |
| 9 5 | UART0_BB_TO_OWL_TX | | OUT |
| 9 5 | UART0_OWL_TO_BB_TX | | IN |
| 8 5 | PCIE0_AP_TO_BB_REFCLK_P | | IN |
| 8 5 | PCIE0_AP_TO_BB_REFCLK_N | | IN |
| 8 5 | PCIE0_AP_TO_BB_TX_P | | IN |
| 8 5 | PCIE0_AP_TO_BB_TX_N | | IN |
| 8 | PCIE0_BB_TO_AP_TX_P | | OUT |
| 8 | PCIE0_BB_TO_AP_TX_N | | OUT |
| 9 5 | PCIE0_AP_TO_BB_PERST_L | | IN |
| 9 5 | PCIE0_AP_TO_BB_CLKREQ_L | | IN |
| 9 5 | PCIE0_BB_TO_PMU_HOST_WAKE_L | | OUT |
| 9 5 | PCIE0_AP_TO_BB_DEV_WAKE | | IN |
| 9 5 | I2S_AP_TO_BB_WS | | IN |
| 9 5 | I2S_AP_TO_BB_CLK | | IN |
| 9 5 | I2S_AP_TO_BB_TX | | IN |
| 9 5 | I2S_BB_TO_AP_TX | | OUT |
| 8 | USB_BB_P | | OUT |
| 8 | USB_BB_N | | OUT |
| 10 | USB_BB_VBUS_DETECT | | IN |
| 8 | SWD_CLK_BB_JTAG_TCK | | IN |
| 8 5 | SWD_IO_BB_JTAG_TMS | | IN |
| 9 | RFFE_BUFFER_LAT_GPIO1 | | OUT |
| 9 5 3 2 | 75_RFFE5_SDATA_BB | | OUT |
| 9 5 3 2 | 75_RFFE5_SCLK_BB | | OUT |
| 3 | PP3V0_TRISTAR | | IN |
| 11 | BB_TO_PMU_AMUX_SMPS1 | | OUT |
| 11 | BB_TO_PMU_AMUX_SMPS3 | | OUT |
| 11 | BB_TO_PMU_AMUX_SMPS4 | | OUT |
| 11 | BB_TO_PMU_AMUX_LDO11_SIM1 | | OUT |

## WLAN/BT

| | | |
|---|---|---|
| 25 | PMU_TO_WLAN_32K_CLK | IN |
| 25 | PMU_TO_WLAN_REG_ON | IN |
| 25 | PMU_TO_BT_REG_ON | IN |
| 25 | WLAN_TO_PMU_HOST_WAKE | OUT |
| 25 | BT_TO_PMU_HOST_WAKE | OUT |
| 25 | AP_TO_BT_WAKE | IN |
| 25 | UART1_AP_TO_BT_TX | IN |
| 25 | UART1_BT_TO_AP_TX | OUT |
| 25 | UART1_AP_TO_BT_RTS_L | IN |
| 25 | UART1_BT_TO_AP_RTS_L | OUT |
| 25 | I2S_AP_TO_BT_BCLK | IN |
| 25 | I2S_AP_TO_BT_LRCK | IN |
| 25 | I2S_BT_TO_AP_DOUT | OUT |
| 25 | I2S_AP_TO_BT_DOUT | IN |
| 25 | UART4_AP_TO_WLAN_TX | IN |
| 25 | UART4_WLAN_TO_AP_TX | OUT |
| 25 | UART4_WLAN_TO_AP_RTS_L | OUT |
| 25 | UART4_AP_TO_WLAN_RTS_L | IN |
| 25 | PCIE_WLAN_TO_AP_CLKREQ_L | OUT |
| 25 | PCIE_AP_TO_WLAN_PERST_L | IN |
| 25 | PCIE_AP_TO_WLAN_DEV_WAKE | IN |
| 25 | PCIE_AP_TO_WLAN_TX_P | IN |
| 25 | PCIE_AP_TO_WLAN_TX_N | IN |
| 25 | PCIE_AP_TO_WLAN_REFCLK_P | IN |
| 25 | PCIE_AP_TO_WLAN_REFCLK_N | IN |
| 25 | PCIE_WLAN_TO_AP_TX_P | OUT |
| 25 | PCIE_WLAN_TO_AP_TX_N | OUT |
| 25 | OWL_TO_WLAN_CONTEXT_A | IN |
| 25 | OWL_TO_WLAN_CONTEXT_B | IN |

## AP DEBUG

| | | |
|---|---|---|
| 5 | PP1V8 | IN |
| 5 | FORCE_DFU | OUT |
| | DFU_STATUS | IN |
| | PMU_AMUX_AY | IN |
| | PMU_AMUX_BY | IN |
| | PMU_TO_SYSTEM_COLD_RESET_L | IN |
| 5 | I2C0_AP_SDA | IO |
| 5 | I2C0_AP_SCL | IO |
| 5 | I2C1_AP_SDA | IO |
| 5 | I2C1_AP_SCL | IO |
| 5 | BUTTON_HOLD_KEY_L | OUT |
| 5 | BUTTON_MENU_KEY_L | OUT |
| 5 | BUTTON_VOL_DOWN_L | OUT |
| 5 | BUTTON_VOL_UP_L | OUT |
| 5 | BUTTON_RINGER_A | OUT |
| | PMU_GPIO20 | IO |
| | PMU_GPIO21 | IO |
| | AP_RESERVED0 | IN |
| | AP_RESERVED1 | IN |
| | AP_RESERVED2 | IN |

## STOCKHOLM

| | | |
|---|---|---|
| 5 | PP1V8_SDRAM | IN |
| | AP_TO_STOCKHOLM_SIM_SEL | |
| 26 | STOCKHOLM_TO_PMU_HOST_WAKE | |
| 26 | AP_TO_STOCKHOLM_FW_DWLD_REQ | OUT |
| 26 | PMU_TO_STOCKHOLM_EN | IN |
| 26 | AP_TO_STOCKHOLM_DEV_WAKE | IN |
| 26 5 | UART3_AP_TO_STOCKHOLM_TXD | IN |
| 26 5 | UART3_STOCKHOLM_TO_AP_TXD | OUT |
| 26 5 | UART3_AP_TO_STOCKHOLM_RTS_L | IN |
| 26 5 | UART3_STOCKHOLM_TO_AP_RTS_L | OUT |

## ANT

| | | |
|---|---|---|
| 26 | STOCKHOLM_ANT | IN |

## POWER

| | | | |
|---|---|---|---|
| 5 | PP1V8_SDRAM VOLTAGE=1.8V | MAKE_BASE=TRUE | PP_1V8_S2R_VDDIO_WLAN_BT VOLTAGE=1.8V 25 |
| | | | PP_STOCKHOLM_1V8_S2R VOLTAGE=1.8V 26 |
| | | | RFFE_VIO_S2R VOLTAGE=1.8V 3 |

# MLB PROBE POINTS

## PCIE

| | | |
|---|---|---|
| PP3073_RF | PCIE0_AP_TO_BB_PERST_L | 5 9 |
| PP3074_RF | PCIE0_BB_TO_PMU_HOST_WAKE_L | 5 9 |
| PP3075_RF | PCIE0_AP_TO_BB_CLKREQ_L | 5 9 |
| PP3076_RF | PCIE0_AP_TO_BB_DEV_WAKE | 5 9 |
| PP3080_RF | PCIE0_AP_TO_BB_REFCLK_P | 5 8 |
| PP3081_RF | PCIE0_AP_TO_BB_REFCLK_N | 5 8 |
| PP3084_RF | PCIE0_AP_TO_BB_TX_P | 5 8 |
| PP3085_RF | PCIE0_AP_TO_BB_TX_N | 5 8 |
| PP3090_RF | BB_JTAG_SRST_L | 8 |
| PP3091_RF | SWD_IO_BB_JTAG_TMS | 5 8 |

## PMU

| | | |
|---|---|---|
| PP3032_RF | PMIC_RESOUT_L | 8 10 |
| PP3033_RF | 50_SLEEP_CLK_32K | 8 10 |
| PP3034_RF | XO_OUT_D0_EN | 8 10 |
| PP3036_RF | SPMI_CLK | 8 10 |
| PP3037_RF | SPMI_DATA | 8 10 |

## BASEBAND

| | | |
|---|---|---|
| PP3017_RF | BB_DEBUG_ERROR | 9 |
| PP3018_RF | 50_MDM_PCIE_CLK | 8 10 |
| PP3019_RF | 50_BBPMU_TO_STOCKHOLM_19P2M_CLK | 10 26 |
| PP3026_RF | STOCKHOLM_TO_BBPMU_CLKREQ | 10 26 |

## DEBUG CONNECTOR

NOSTUFF
J3000_RF
AXE550124
F-ST-SM

| | | | |
|---|---|---|---|
| 25 9 | UART_WLAN_TO_BB_COEX_TX | SIM1_CLK | 3 9 |
| 5 | I2C0_AP_SDA | SIM1_RST | 3 9 |
| 5 | I2C0_AP_SCL | SIM1_IO | 3 9 |
| 5 | BUTTON_VOL_DOWN_L | PP_UIM1_LDO11 | 3 7 11 |
| 5 | BUTTON_VOL_UP_L | SIM1_TRAY_DET | 3 9 |
| 5 | BUTTON_RINGER_A | 4FF_SIM_SWP | 3 24 26 |
| 24 9 5 | SIM2_RESET | I2C1_AP_SDA | 5 |
| 24 9 | SIM2_DATA | I2C1_AP_SCL | 5 |
| 25 9 | UART_BB_TO_WLAN_COEX_TX | BUTTON_HOLD_KEY_L | 5 |
| 9 | SIM2_DETECT | BUTTON_MENU_KEY_L | 5 |
| 24 | SIM2_DATA_R | PP1V8 | 5 |
| | | FORCE_DFU | 5 |
| | | SIM2_CLK | 9 24 |
| | | PP_UIM2_LDO13 | 7 11 24 |

ESD CAPS

| | | |
|---|---|---|
| 10 5 | PMU_TO_BBPMU_RESET_L | |
| 24 9 5 | SIM2_RESET | |
| | C5101_RF 100PF 5% 16V NP0-C0G 01005 | C3503_RF 100PF 5% 16V NP0-C0G 01005 |

## ANT TUNER

| | | |
|---|---|---|
| PP3001_RF | 75_RFFE5_SDATA_BB | 2 3 5 9 |
| PP3002_RF | 75_RFFE5_SCLK_BB | 2 3 5 9 |

## RFFE

| | | |
|---|---|---|
| PP3056_RF | 75_RFFE1_SDATA_BB | 9 16 |
| PP3077_RF | 75_RFFE4_SDATA_BB | 9 12 |
| PP3051_RF | 75_RFFE5_SCLK_BB_BUFFER | 9 |
| PP3052_RF | 75_RFFE5_SDATA_BB_BUFFER | 9 |
| PP3053_RF | 75_RFFE2_SDATA_BB | 9 17 18 19 20 21 22 |
| PP3054_RF | 75_RFFE3_SDATA_BB | 9 23 |

## STOCKHOLM

| | | |
|---|---|---|
| PP3062_RF | STOCKHOLM_DWPM_DBG | 26 |
| PP3063_RF | STOCKHOLM_DWPS_DBG | 26 |
| PP3064_RF | UART3_AP_TO_STOCKHOLM_TXD | 5 26 |
| PP3065_RF | UART3_STOCKHOLM_TO_AP_TXD | 5 26 |
| PP3066_RF | UART3_AP_TO_STOCKHOLM_RTS_L | 5 26 |
| PP3067_RF | UART3_STOCKHOLM_TO_AP_RTS_L | 5 26 |

| | | |
|---|---|---|
| PAGE TITLE | DEBUG CONN & TEST POINTS | |
| | Apple Inc. | DRAWING NUMBER 051-1902 SIZE D |
| | | REVISION A.0.0 |
| NOTICE OF PROPRIETARY PROPERTY: THE INFORMATION CONTAINED HEREIN IS THE PROPRIETARY PROPERTY OF APPLE INC. THE POSESSOR AGREES TO THE FOLLOWING: I TO MAINTAIN THIS DOCUMENT IN CONFIDENCE II NOT TO REPRODUCE OR COPY IT III NOT TO REVEAL OR PUBLISH IT IN WHOLE OR PART IV ALL RIGHTS RESERVED | | BRANCH |
| | | PAGE 30 OF 51 |
| | | SHEET 38 OF 59 |

CONFIDENTIAL AND PROPRIETARY APPLE SYSTEM DESIGN. FOR REFERENCE PURPOSE ONLY - NOT A CHANGE REQUEST

201907-王敬恒

# BASEBAND: POWER 1

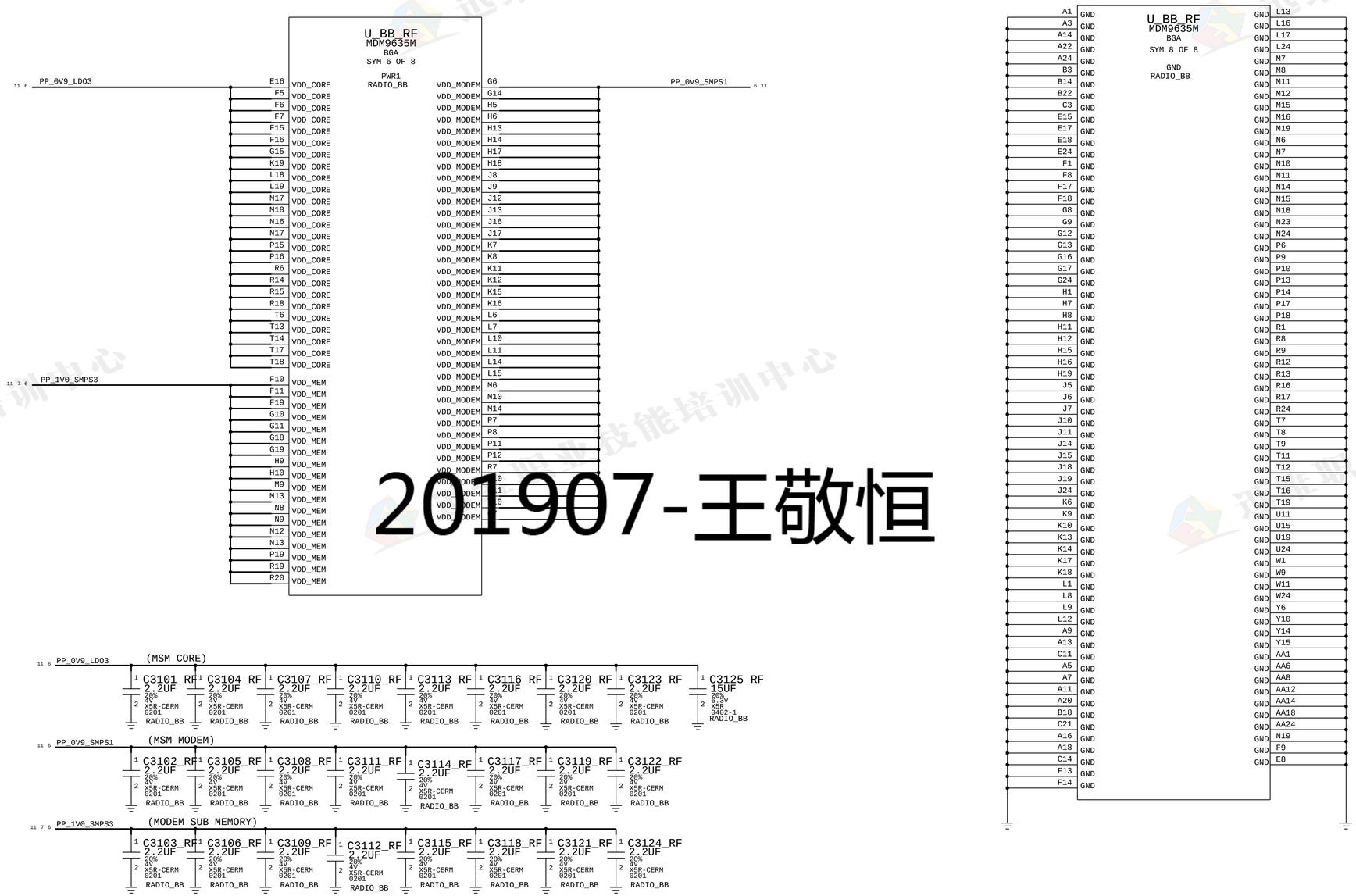


201907-王敬恒

迅维职业技能培训中心

CONFIDENTIAL AND PROPRIETARY APPLE SYSTEM DESIGN. FOR REFERENCE PURPOSE ONLY - NOT A CHANGE REQUEST

PAGE TITLE: CELLULAR BASEBAND: POWER1

Apple Inc.

DRAWING NUMBER: 051-1902 | SIZE: D

REVISION: A.0.0

BRANCH

PAGE: 31 OF 51

SHEET: 39 OF 59

NOTICE OF PROPRIETARY PROPERTY:
THE INFORMATION CONTAINED HEREIN IS THE PROPRIETARY PROPERTY OF APPLE INC.
THE POSESSOR AGREES TO THE FOLLOWING:
I TO MAINTAIN THIS DOCUMENT IN CONFIDENCE
II NOT TO REPRODUCE OR COPY IT
III NOT TO REVEAL OR PUBLISH IT IN WHOLE OR PART
IV ALL RIGHTS RESERVED

# BASEBAND: POWER 2

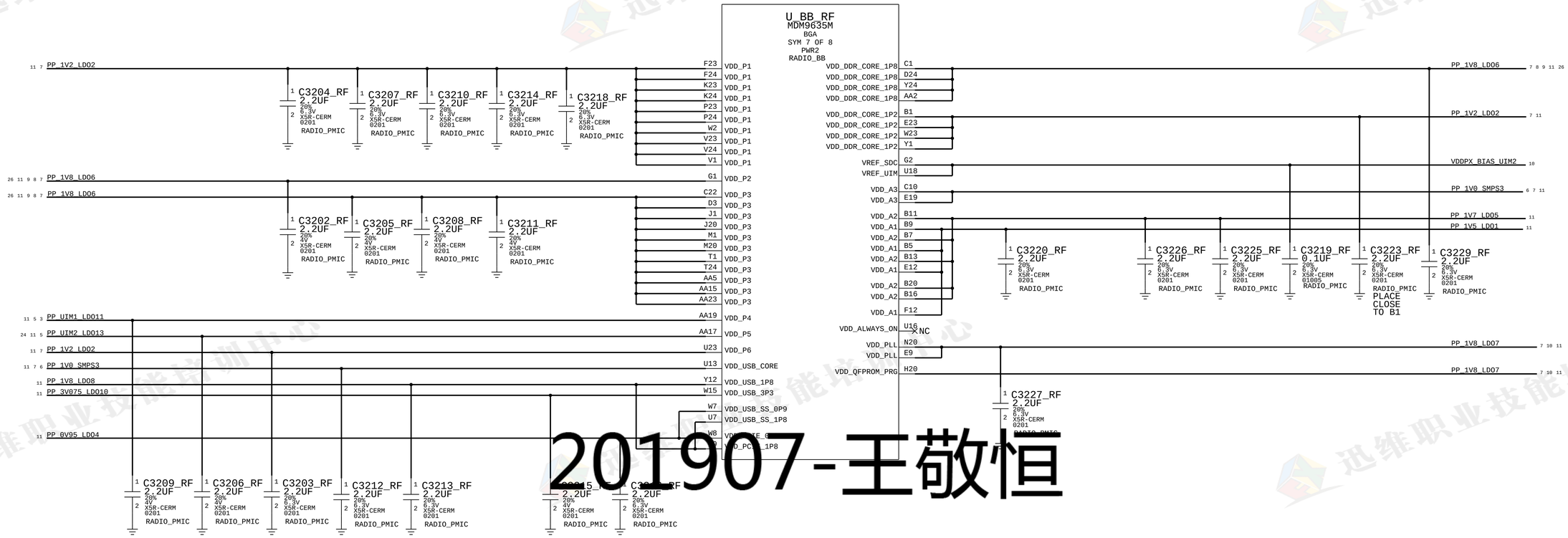


201907-王敬恒

CONFIDENTIAL AND PROPRIETARY APPLE SYSTEM DESIGN. FOR REFERENCE PURPOSE ONLY - NOT A CHANGE REQUEST

PAGE TITLE
CELLULAR BASEBAND: POWER2

Apple Inc.

DRAWING NUMBER 051-1902 SIZE D
REVISION A.0.0
BRANCH
PAGE 32 OF 51
SHEET 40 OF 59

NOTICE OF PROPRIETARY PROPERTY:
THE INFORMATION CONTAINED HEREIN IS THE PROPRIETARY PROPERTY OF APPLE INC.
THE POSESSOR AGREES TO THE FOLLOWING:
I TO MAINTAIN THIS DOCUMENT IN CONFIDENCE
II NOT TO REPRODUCE OR COPY IT
III NOT TO REVEAL OR PUBLISH IT IN WHOLE OR PART
IV ALL RIGHTS RESERVED

# BASEBAND: CONTROL AND INTERFACES

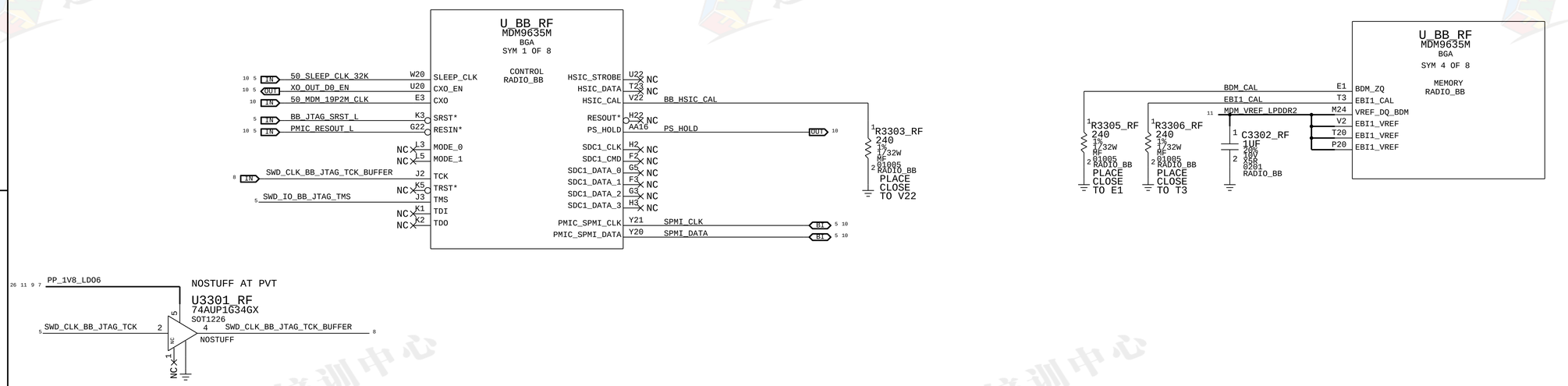





# 201907-王敬恒

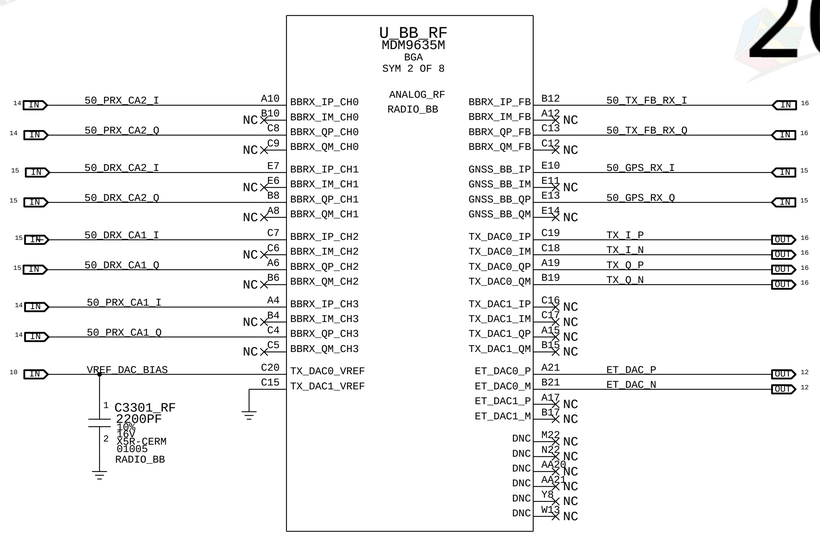


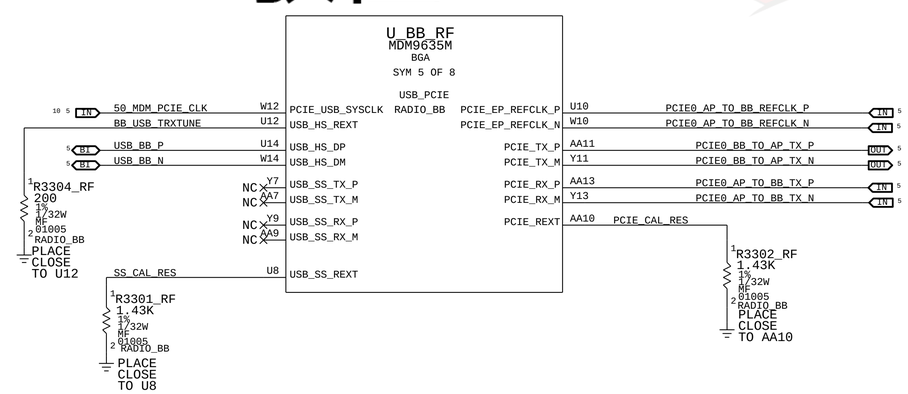


CONFIDENTIAL AND PROPRIETARY APPLE SYSTEM DESIGN. FOR REFERENCE PURPOSE ONLY - NOT A CHANGE REQUEST

| | |
|---|---|
| PAGE TITLE | CELLULAR BASEBAND: CONTROL AND INTERFACES |
| Apple Inc. | DRAWING NUMBER 051-1902 SIZE D |
| | REVISION A.0.0 |
| NOTICE OF PROPRIETARY PROPERTY: THE INFORMATION CONTAINED HEREIN IS THE PROPRIETARY PROPERTY OF APPLE INC. THE POSESSOR AGREES TO THE FOLLOWING: I TO MAINTAIN THIS DOCUMENT IN CONFIDENCE II NOT TO REPRODUCE OR COPY IT III NOT TO REVEAL OR PUBLISH IT IN WHOLE OR PART IV ALL RIGHTS RESERVED | BRANCH |
| | PAGE 33 OF 51 |
| | SHEET 41 OF 59 |

# BASEBAND: GPIOS

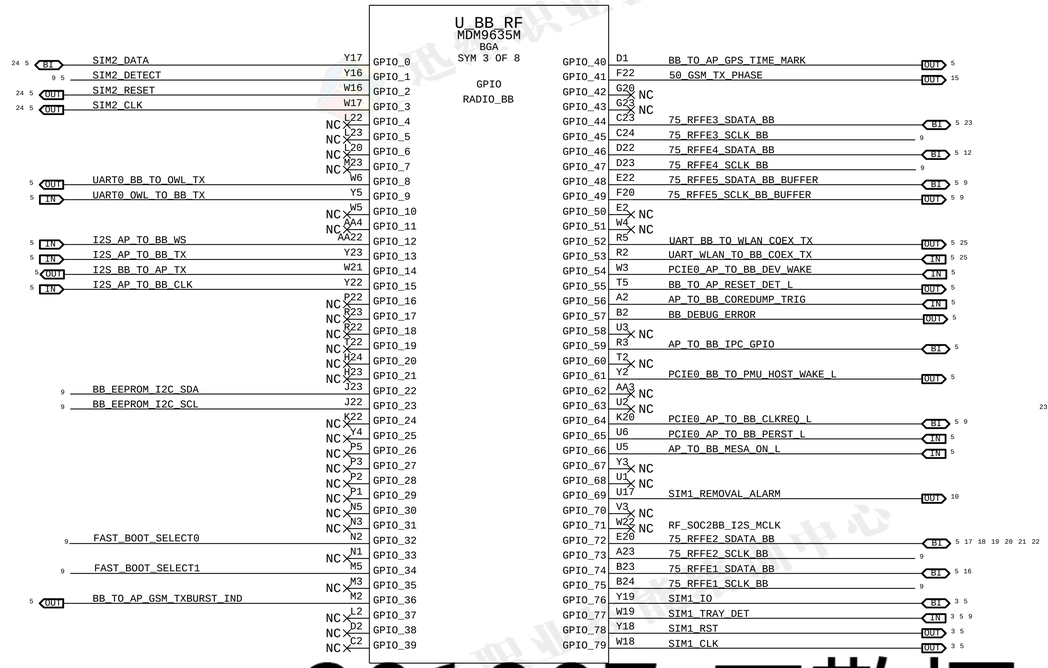


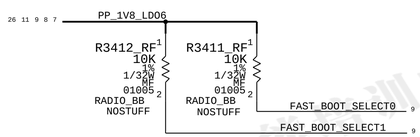


STUFF R3411 FOR PCIE BOOT (UNFUSED BB)
STUFF R3412 FOR USB BOOT (UNFUSED BB)

| OPTION | SEL2 | SEL1 | SEL0 |
|---|---|---|---|
| GPIO | 35 | 34 | 32 |
| PCIE | 0 | 0 | 1 |
| HSUSB | 0 | 1 | 0 |
| HSIC | 0 | 1 | 1 |

BUFFER ON RFFE5
SCLK/SDATA_A IS OUTPUT

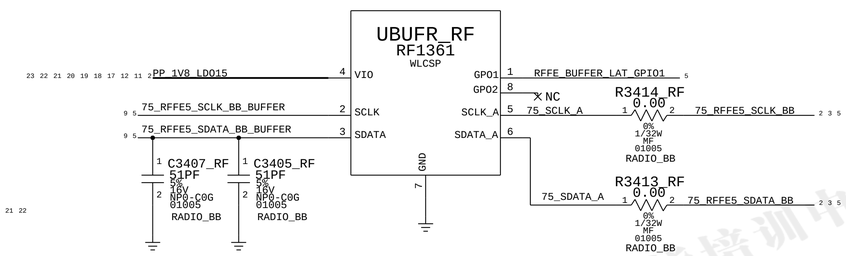


PLACE C3405_RF CLOSE TO BUFFER
PLACE C3407_RF CLOSE TO MDM

## RFFE CLOCK FILTERS

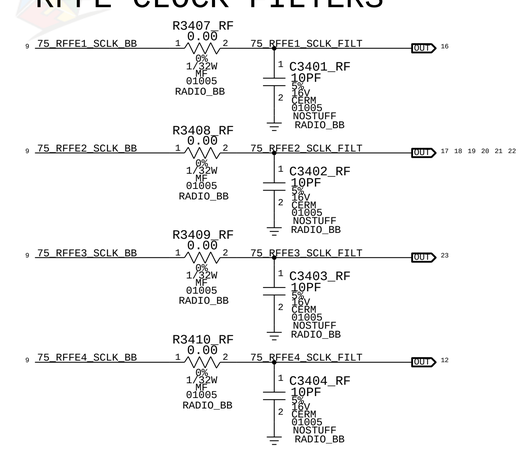


NOSTUFF R3402 WHEN VINYL PRESENT
STUFF R3402 WHEN VINYL NOT PRESENT

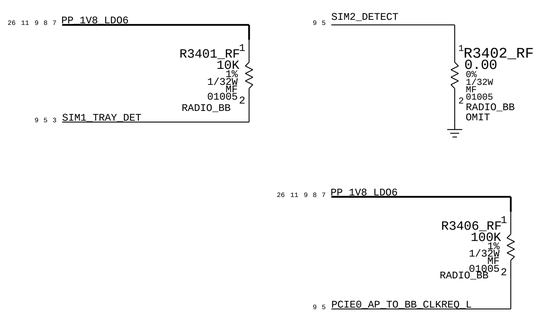


PCIE PULL-UPS TO BB RAIL

## BB EEPROM

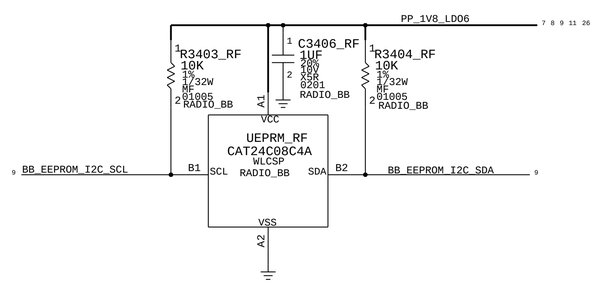


## RFFE USAGE TABLE

RFFE1 WTR
RFFE2 LB/MB/HB PAD, 2G PA, LB/MB/HB ASM
RFFE3 DIV ASM
RFFE4 QPOET
RFFE5 DIV LNA, ANT TUNERS

201907-王敬恒

CONFIDENTIAL AND PROPRIETARY APPLE SYSTEM DESIGN. FOR REFERENCE PURPOSE ONLY - NOT A CHANGE REQUEST

PAGE TITLE: CELLULAR BASEBAND: GPIOS

Apple Inc.

DRAWING NUMBER: 051-1902 | SIZE: D
REVISION: A.0.0
BRANCH:
PAGE: 34 OF 51
SHEET: 42 OF 59

NOTICE OF PROPRIETARY PROPERTY:
THE INFORMATION CONTAINED HEREIN IS THE PROPRIETARY PROPERTY OF APPLE INC.
THE POSESSOR AGREES TO THE FOLLOWING:
I TO MAINTAIN THIS DOCUMENT IN CONFIDENCE
II NOT TO REPRODUCE OR COPY IT
III NOT TO REVEAL OR PUBLISH IT IN WHOLE OR PART
IV ALL RIGHTS RESERVED

# PMU: CONTROL AND CLOCKS

| HW_REV2_ID | R3502 | R3503 | CONFIG |
|---|---|---|---|
| 1.80V | 698K | - | MLB |
| 0.12V | 698K | 51.1K | SELF GEN |

| HW_REV_ID | R3504 | R3505 | REVISION |
|---|---|---|---|
| 0.10V | 887K | 51.1K | DEV1 |
| 0.30V | 255K | 51.1K | DEV2 |
| 0.50V | 124K | 51.1K | DEV3 |
| 0.70V | 82.5K | 51.1K | DEV4/PROTOMLB1 |
| 0.90V | 51.1K | 51.1K | PROTOMLB2 |
| 1.10V | 31.6K | 51.1K | DEV5/PROTO1 |
| 1.20V | 50K | 100K | PROTO2 |
| 1.31V | 39K | 105K | EVT |
| 1.43V | 13.3K | 51.1K | EVT_ALT |
| 1.55V | 8.25K | 51.1K | CARRIER BUILD |
| 1.67V | 3.92K | 51.1K | DVT |
| 1.80V | 10K | - | PVT |

## RESET AND CONTROL: PMU

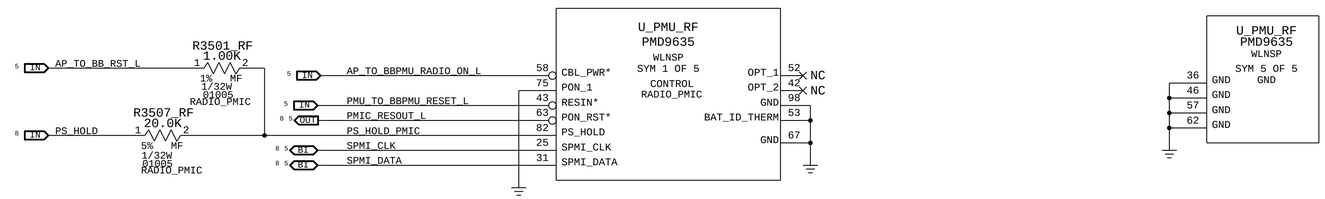


## MPPS AND GPIOS: PMU

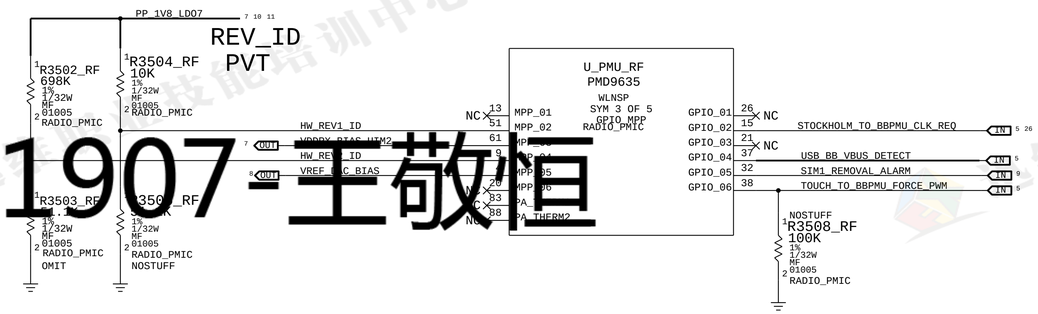


201907-王敬直

## XTAL AND CLOCK: PMU

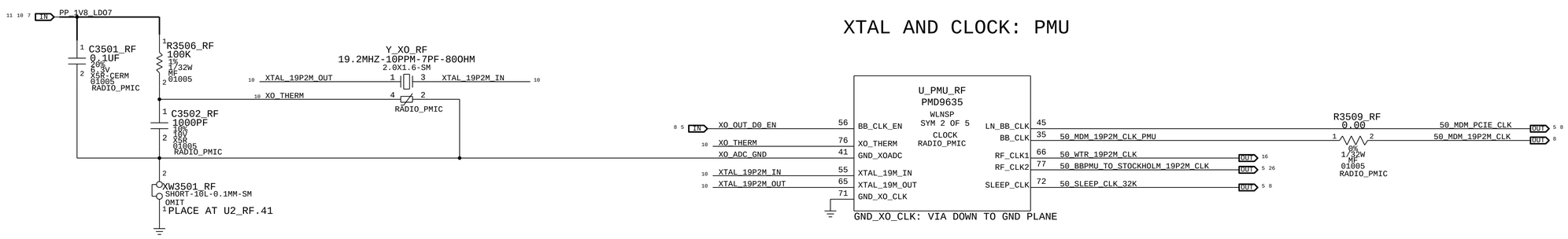


CONFIDENTIAL AND PROPRIETARY APPLE SYSTEM DESIGN. FOR REFERENCE PURPOSE ONLY - NOT A CHANGE REQUEST

PAGE TITLE: CELLULAR PMU: CONTROL AND CLOCKS

Apple Inc.

DRAWING NUMBER: 051-1902 SIZE: D

REVISION: A.0.0

BRANCH:

NOTICE OF PROPRIETARY PROPERTY:
THE INFORMATION CONTAINED HEREIN IS THE PROPRIETARY PROPERTY OF APPLE INC.
THE POSESSOR AGREES TO THE FOLLOWING:
I TO MAINTAIN THIS DOCUMENT IN CONFIDENCE
II NOT TO REPRODUCE OR COPY IT
III NOT TO REVEAL OR PUBLISH IT IN WHOLE OR PART
IV ALL RIGHTS RESERVED

# PMU: SWITCHERS AND LDOS

## SWITCHERS BULK CAPS

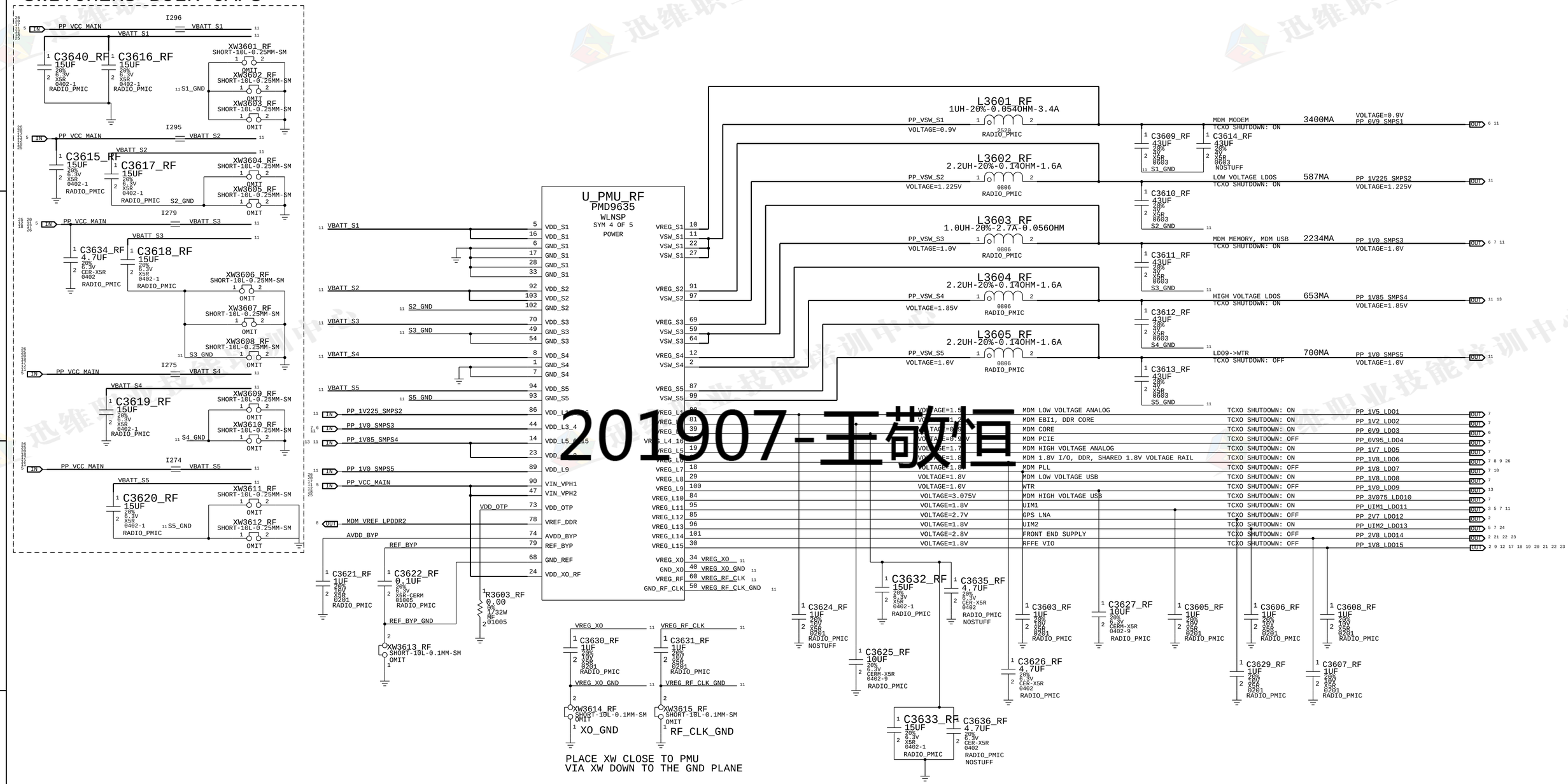


201907-王敬恒

CONFIDENTIAL AND PROPRIETARY APPLE SYSTEM DESIGN. FOR REFERENCE PURPOSE ONLY - NOT A CHANGE REQUEST

PAGE TITLE
CELLULAR PMU: SWITCHERS AND LDOS

Apple Inc.

DRAWING NUMBER 051-1902 SIZE D
REVISION A.0.0
BRANCH
PAGE 36 OF 51
SHEET 44 OF 59

NOTICE OF PROPRIETARY PROPERTY:
THE INFORMATION CONTAINED HEREIN IS THE PROPRIETARY PROPERTY OF APPLE INC.
THE POSESSOR AGREES TO THE FOLLOWING:
I TO MAINTAIN THIS DOCUMENT IN CONFIDENCE
II NOT TO REPRODUCE OR COPY IT
III NOT TO REVEAL OR PUBLISH IT IN WHOLE OR PART
IV ALL RIGHTS RESERVED

# PMU: ET MODULATOR

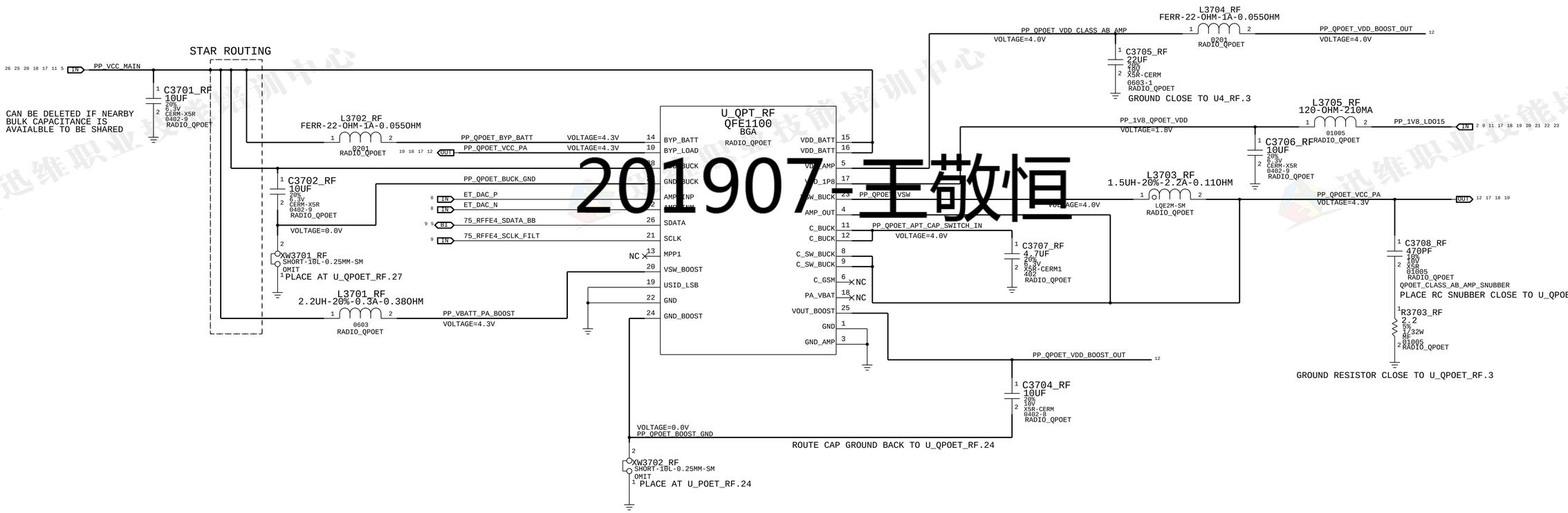


201907-王敬恒

| | |
|---|---|
| PAGE TITLE | CELLULAR PMU: ET MODULATOR |
| | Apple Inc. |
| DRAWING NUMBER | 051-1902 |
| SIZE | D |
| REVISION | A.0.0 |
| BRANCH | |
| PAGE | 37 OF 51 |
| SHEET | 45 OF 59 |

NOTICE OF PROPRIETARY PROPERTY:
THE INFORMATION CONTAINED HEREIN IS THE PROPRIETARY PROPERTY OF APPLE INC.
THE POSESSOR AGREES TO THE FOLLOWING:
I TO MAINTAIN THIS DOCUMENT IN CONFIDENCE
II NOT TO REPRODUCE OR COPY IT
III NOT TO REVEAL OR PUBLISH IT IN WHOLE OR PART
IV ALL RIGHTS RESERVED

CONFIDENTIAL AND PROPRIETARY APPLE SYSTEM DESIGN. FOR REFERENCE PURPOSE ONLY - NOT A CHANGE REQUEST

# TRANSCEIVER: POWER

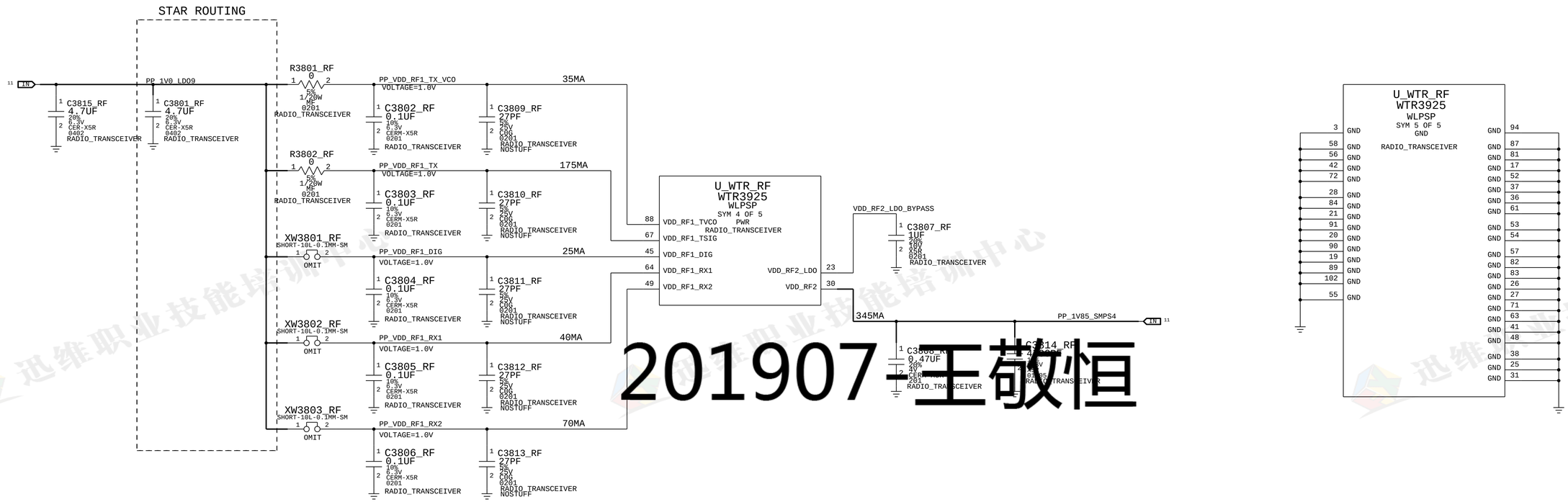


201907-王敬恒

CONFIDENTIAL AND PROPRIETARY APPLE SYSTEM DESIGN. FOR REFERENCE PURPOSE ONLY - NOT A CHANGE REQUEST

PAGE TITLE: CELLULAR TRANSCEIVER: POWER

Apple Inc.

DRAWING NUMBER: 051-1902 SIZE: D

REVISION: A.0.0

BRANCH:

PAGE: 38 OF 51

SHEET: 46 OF 59

NOTICE OF PROPRIETARY PROPERTY:
THE INFORMATION CONTAINED HEREIN IS THE PROPRIETARY PROPERTY OF APPLE INC.
THE POSESSOR AGREES TO THE FOLLOWING:
I TO MAINTAIN THIS DOCUMENT IN CONFIDENCE
II NOT TO REPRODUCE OR COPY IT
III NOT TO REVEAL OR PUBLISH IT IN WHOLE OR PART
IV ALL RIGHTS RESERVED

# TRANSCEIVER: PRX PORTS

DC BLOCKING CAP VALUES CANNOT BE MORE THAN 33PF

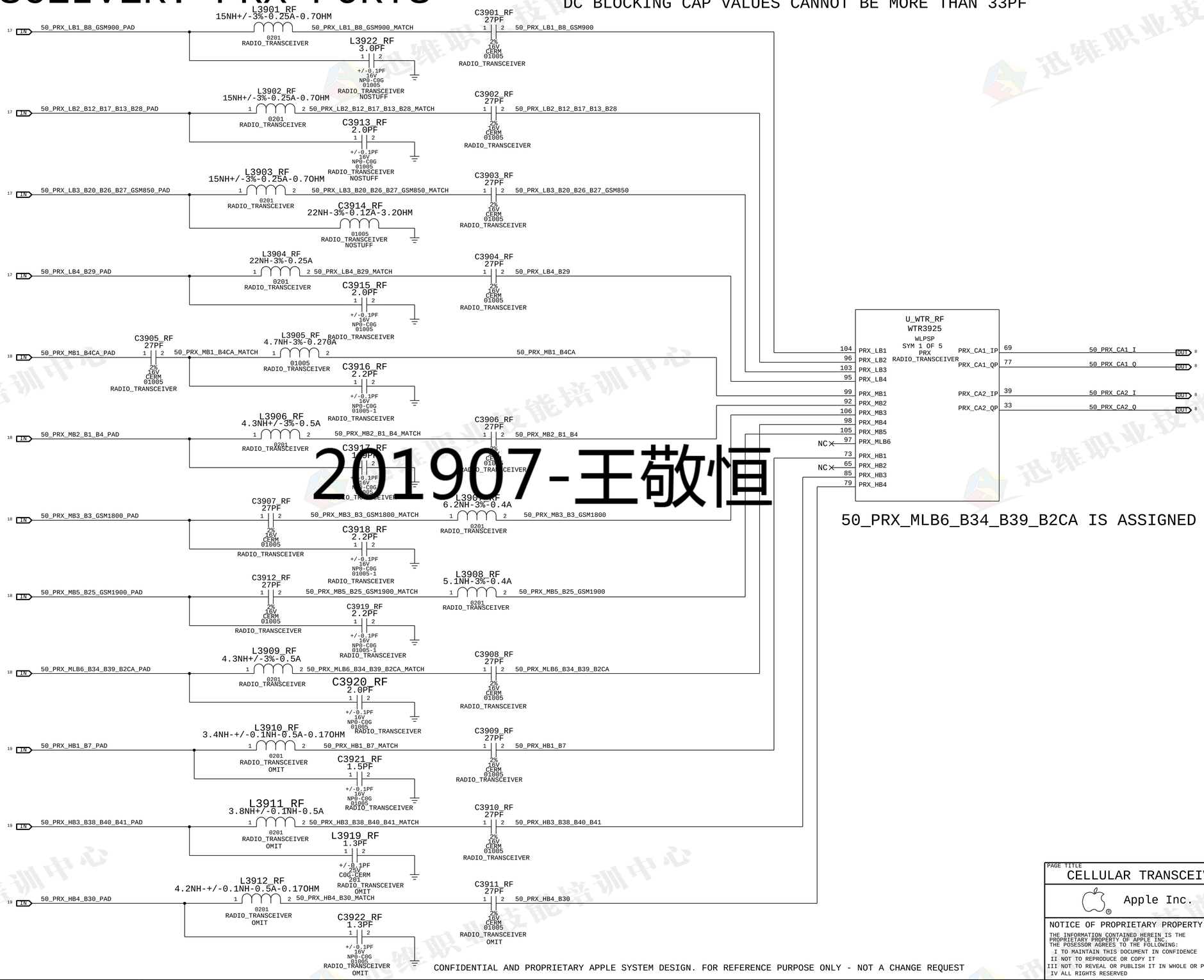


201907-王敬恒

迅维职业技能培训中心

CONFIDENTIAL AND PROPRIETARY APPLE SYSTEM DESIGN. FOR REFERENCE PURPOSE ONLY - NOT A CHANGE REQUEST

PAGE TITLE: CELLULAR TRANSCEIVER: PRX PORTS

Apple Inc.

DRAWING NUMBER: 051-1902 SIZE: D

REVISION: A.0.0

BRANCH:

PAGE: 39 OF 51

SHEET: 47 OF 59

NOTICE OF PROPRIETARY PROPERTY:
THE INFORMATION CONTAINED HEREIN IS THE PROPRIETARY PROPERTY OF APPLE INC.
THE POSESSOR AGREES TO THE FOLLOWING:
I TO MAINTAIN THIS DOCUMENT IN CONFIDENCE
II NOT TO REPRODUCE OR COPY IT
III NOT TO REVEAL OR PUBLISH IT IN WHOLE OR PART
IV ALL RIGHTS RESERVED

# TRANSCEIVER: DRX/GPS PORTS

DRX MODULE PORTS ARE DC BLOCKED

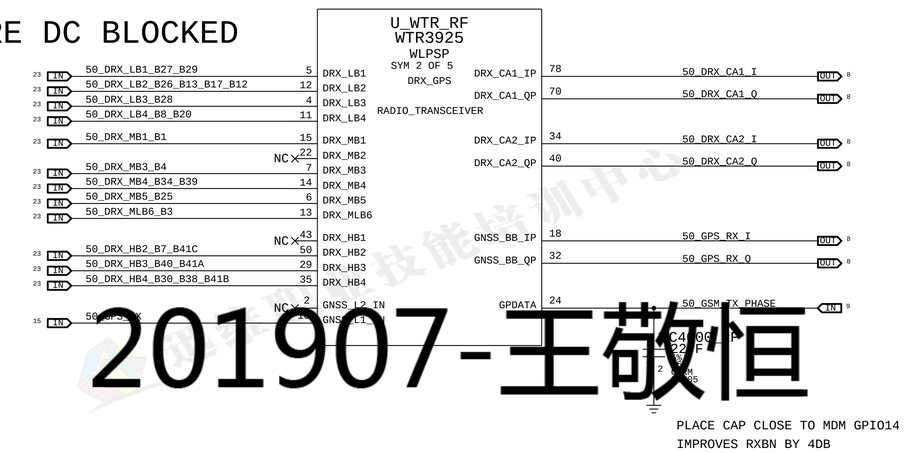


201907-王敬恒

PLACE CAP CLOSE TO MDM GPIO14
IMPROVES RXBN BY 4DB

## GPS FILTER

PLACE NEAR U_WTR

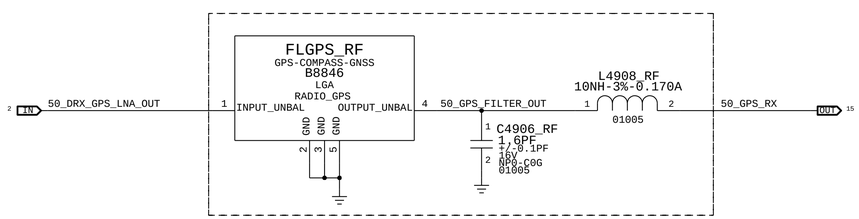


CONFIDENTIAL AND PROPRIETARY APPLE SYSTEM DESIGN. FOR REFERENCE PURPOSE ONLY - NOT A CHANGE REQUEST

| | |
|---|---|
| PAGE TITLE | CELLULAR TRANSCEIVER: DRX/GPS PORTS |
| Apple Inc. | DRAWING NUMBER 051-1902 · SIZE D |
| | REVISION A.0.0 |
| | BRANCH |
| | PAGE 40 OF 51 |
| | SHEET 48 OF 59 |

NOTICE OF PROPRIETARY PROPERTY:
THE INFORMATION CONTAINED HEREIN IS THE PROPRIETARY PROPERTY OF APPLE INC.
THE POSESSOR AGREES TO THE FOLLOWING:
I TO MAINTAIN THIS DOCUMENT IN CONFIDENCE
II NOT TO REPRODUCE OR COPY IT
III NOT TO REVEAL OR PUBLISH IT IN WHOLE OR PART
IV ALL RIGHTS RESERVED

# TRANSCEIVER: TX PORTS

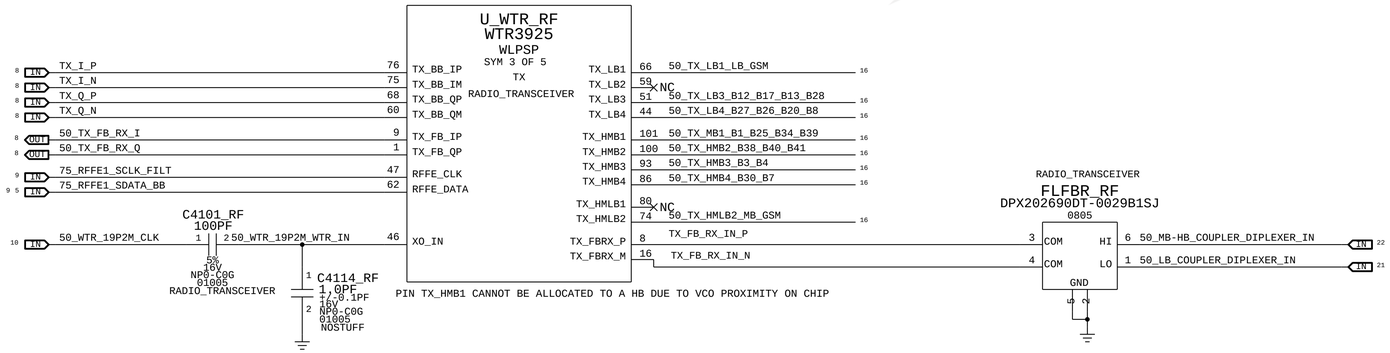


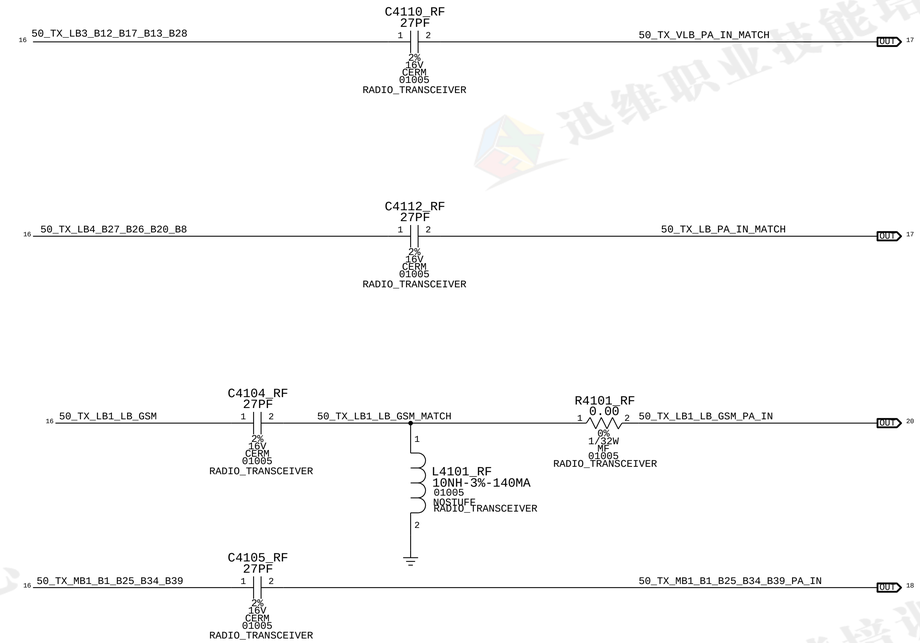


201907-王敬恒

B12/13 TX INTERSTAGE FILTER REMOVED

| PAGE TITLE | |
|---|---|
| CELLULAR TRANSCEIVER: TX PORTS | |
| Apple Inc. | DRAWING NUMBER 051-1902 / SIZE D |
| | REVISION A.0.0 |
| NOTICE OF PROPRIETARY PROPERTY: THE INFORMATION CONTAINED HEREIN IS THE PROPRIETARY PROPERTY OF APPLE INC. THE POSESSOR AGREES TO THE FOLLOWING: I TO MAINTAIN THIS DOCUMENT IN CONFIDENCE II NOT TO REPRODUCE OR COPY IT III NOT TO REVEAL OR PUBLISH IT IN WHOLE OR PART IV ALL RIGHTS RESERVED | BRANCH |
| | PAGE 41 OF 51 |
| | SHEET 49 OF 59 |

CONFIDENTIAL AND PROPRIETARY APPLE SYSTEM DESIGN. FOR REFERENCE PURPOSE ONLY - NOT A CHANGE REQUEST

# LOW BAND PA+DUPLEXERS

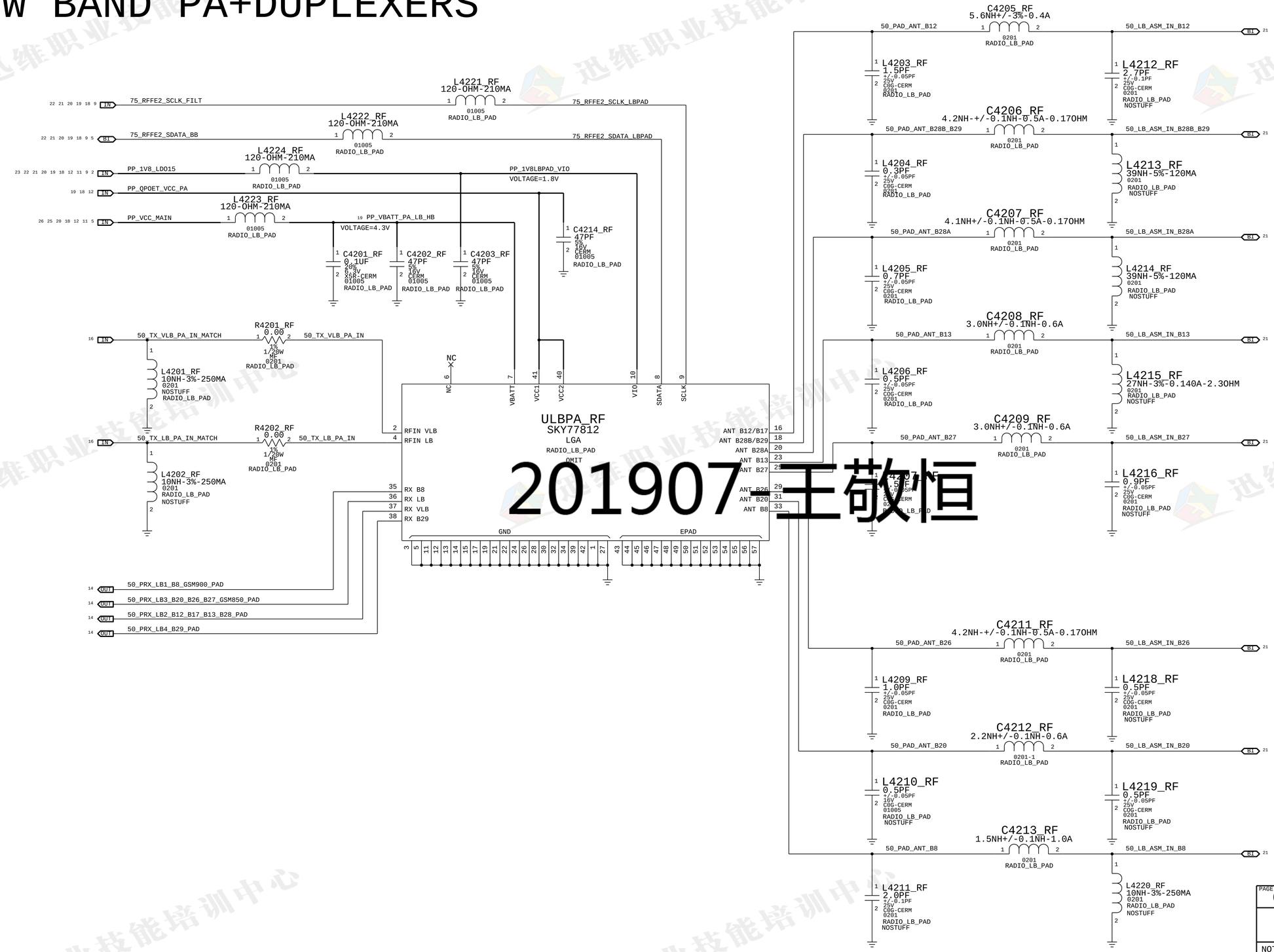


201907王敬恒

CONFIDENTIAL AND PROPRIETARY APPLE SYSTEM DESIGN. FOR REFERENCE PURPOSE ONLY - NOT A CHANGE REQUEST

PAGE TITLE
CELLULAR FRONT END: LB PAD

Apple Inc.

DRAWING NUMBER 051-1902 SIZE D
REVISION A.0.0
BRANCH
PAGE 42 OF 51
SHEET 50 OF 59

NOTICE OF PROPRIETARY PROPERTY:
THE INFORMATION CONTAINED HEREIN IS THE PROPRIETARY PROPERTY OF APPLE INC.
THE POSESSOR AGREES TO THE FOLLOWING:
I TO MAINTAIN THIS DOCUMENT IN CONFIDENCE
II NOT TO REPRODUCE OR COPY IT
III NOT TO REVEAL OR PUBLISH IT IN WHOLE OR PART
IV ALL RIGHTS RESERVED

# MID BAND PA+DUPLEXERS

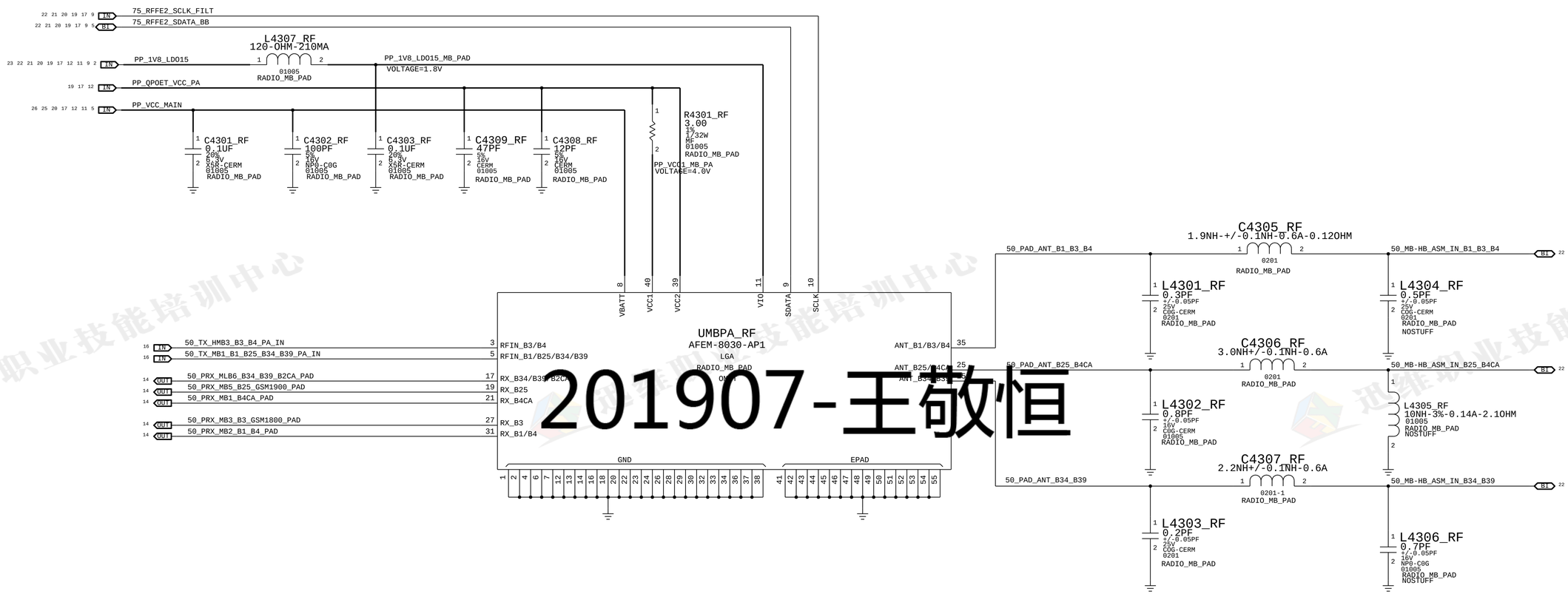


201907-王敬恒

CONFIDENTIAL AND PROPRIETARY APPLE SYSTEM DESIGN. FOR REFERENCE PURPOSE ONLY - NOT A CHANGE REQUEST

PAGE TITLE
CELLULAR FRONT END: MB PAD

Apple Inc.

DRAWING NUMBER 051-1902 SIZE D

REVISION A.0.0

BRANCH

PAGE 43 OF 51

SHEET 51 OF 59

NOTICE OF PROPRIETARY PROPERTY:
THE INFORMATION CONTAINED HEREIN IS THE PROPRIETARY PROPERTY OF APPLE INC.
THE POSESSOR AGREES TO THE FOLLOWING:
I TO MAINTAIN THIS DOCUMENT IN CONFIDENCE
II NOT TO REPRODUCE OR COPY IT
III NOT TO REVEAL OR PUBLISH IT IN WHOLE OR PART
IV ALL RIGHTS RESERVED

# HIGH BAND PA+DUPLEXERS

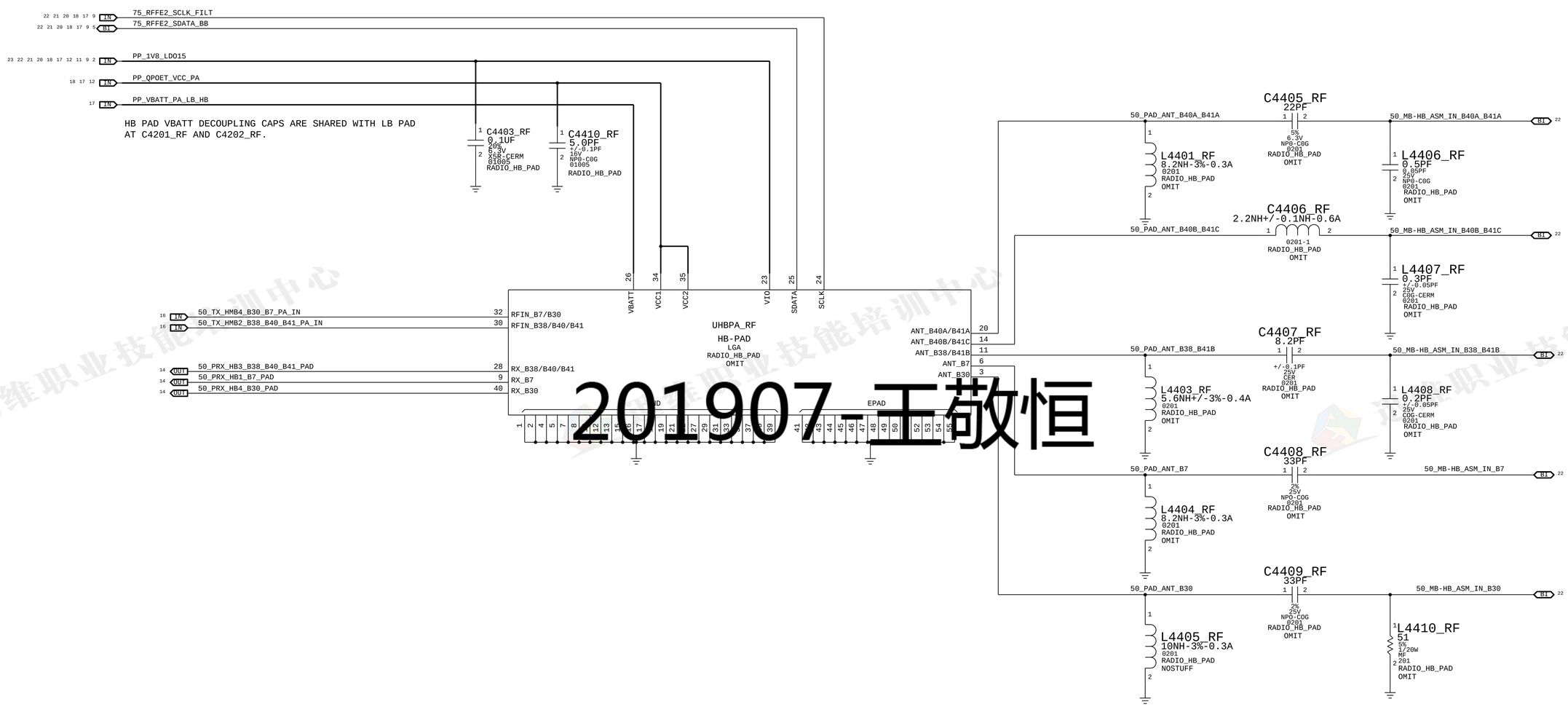


201907_王敬恒

CONFIDENTIAL AND PROPRIETARY APPLE SYSTEM DESIGN. FOR REFERENCE PURPOSE ONLY - NOT A CHANGE REQUEST

PAGE TITLE: CELLULAR FRONT END: HB PAD

Apple Inc.

DRAWING NUMBER: 051-1902 | SIZE: D

REVISION: A.0.0

BRANCH:

PAGE: 44 OF 51

SHEET: 52 OF 59

NOTICE OF PROPRIETARY PROPERTY:
THE INFORMATION CONTAINED HEREIN IS THE PROPRIETARY PROPERTY OF APPLE INC.
THE POSESSOR AGREES TO THE FOLLOWING:
I TO MAINTAIN THIS DOCUMENT IN CONFIDENCE
II NOT TO REPRODUCE OR COPY IT
III NOT TO REVEAL OR PUBLISH IT IN WHOLE OR PART
IV ALL RIGHTS RESERVED

# 2G PA

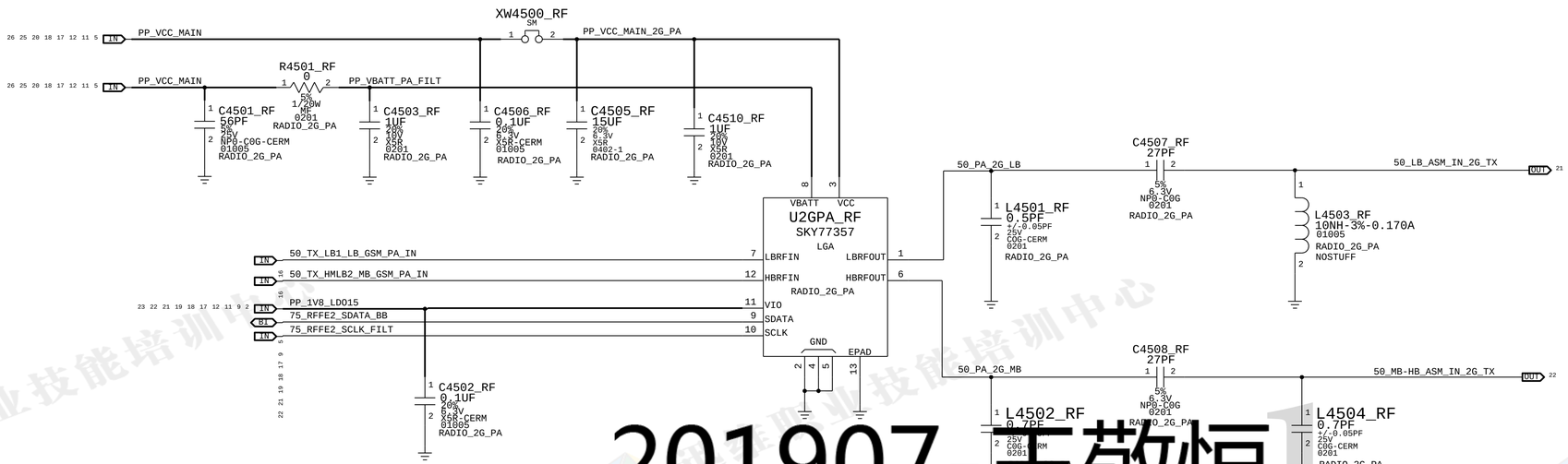


201907-王敬恒

迅维职业技能培训中心

CONFIDENTIAL AND PROPRIETARY APPLE SYSTEM DESIGN. FOR REFERENCE PURPOSE ONLY - NOT A CHANGE REQUEST

PAGE TITLE
CELLULAR FRONT END: 2G PA

Apple Inc.

DRAWING NUMBER 051-1902 SIZE D
REVISION A.0.0
BRANCH
PAGE 45 OF 51
SHEET 53 OF 59

NOTICE OF PROPRIETARY PROPERTY:
THE INFORMATION CONTAINED HEREIN IS THE PROPRIETARY PROPERTY OF APPLE INC.
THE POSESSOR AGREES TO THE FOLLOWING:
I TO MAINTAIN THIS DOCUMENT IN CONFIDENCE
II NOT TO REPRODUCE OR COPY IT
III NOT TO REVEAL OR PUBLISH IT IN WHOLE OR PART
IV ALL RIGHTS RESERVED

# LOW BAND ANTENNA SWITCH MODULE

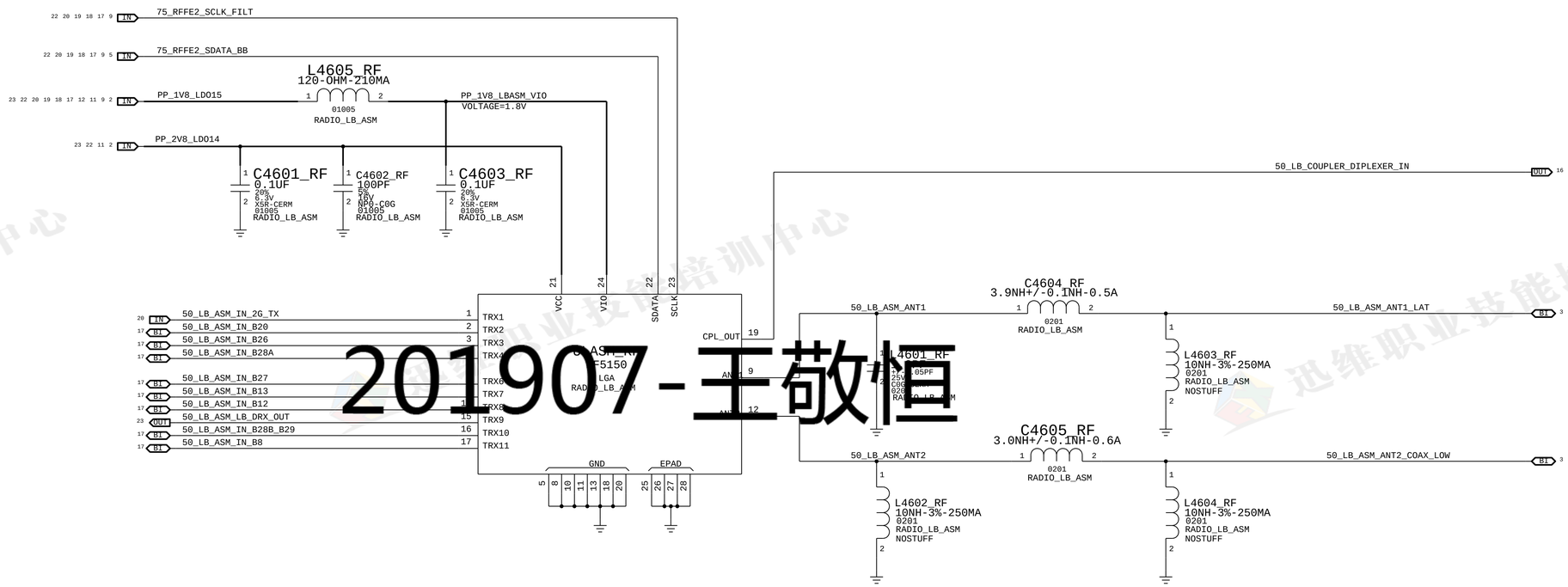


201907-王敬恒

| | |
|---|---|
| PAGE TITLE | CELLULAR FRONT END: LB ASM |
| | Apple Inc. |
| DRAWING NUMBER | 051-1902 |
| SIZE | D |
| REVISION | A.0.0 |
| BRANCH | |
| PAGE | 46 OF 51 |
| SHEET | 54 OF 59 |

NOTICE OF PROPRIETARY PROPERTY:
THE INFORMATION CONTAINED HEREIN IS THE PROPRIETARY PROPERTY OF APPLE INC.
THE POSESSOR AGREES TO THE FOLLOWING:
I TO MAINTAIN THIS DOCUMENT IN CONFIDENCE
II NOT TO REPRODUCE OR COPY IT
III NOT TO REVEAL OR PUBLISH IT IN WHOLE OR PART
IV ALL RIGHTS RESERVED

CONFIDENTIAL AND PROPRIETARY APPLE SYSTEM DESIGN. FOR REFERENCE PURPOSE ONLY - NOT A CHANGE REQUEST

# MID-HIGH BAND ANTENNA SWITCH MODULE

EVT ASM ASSIGNMENT:
B40B/B41C - TRX2
B30 - TDD3

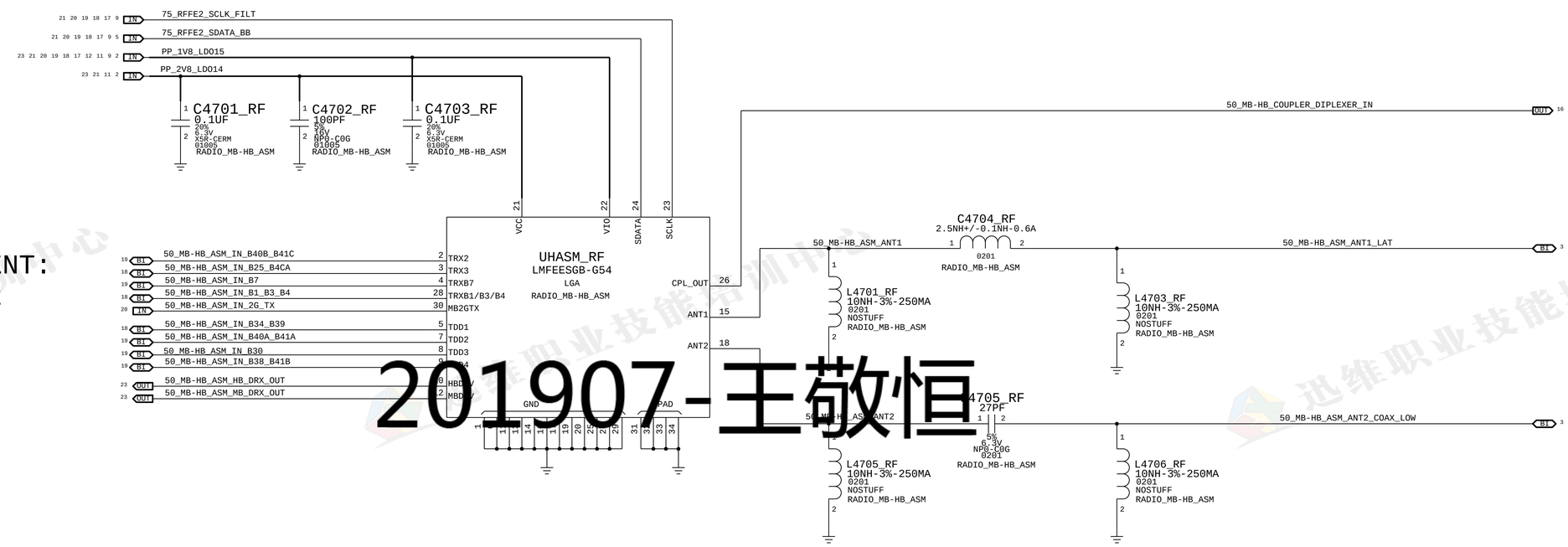


201907-王敬恒

| | |
|---|---|
| PAGE TITLE | CELLULAR FRONT END: MB-HB ASM |
| | Apple Inc. |
| DRAWING NUMBER | 051-1902 |
| SIZE | D |
| REVISION | A.0.0 |
| BRANCH | |
| PAGE | 47 OF 51 |
| SHEET | 55 OF 59 |

NOTICE OF PROPRIETARY PROPERTY:
THE INFORMATION CONTAINED HEREIN IS THE PROPRIETARY PROPERTY OF APPLE INC.
THE POSESSOR AGREES TO THE FOLLOWING:
I TO MAINTAIN THIS DOCUMENT IN CONFIDENCE
II NOT TO REPRODUCE OR COPY IT
III NOT TO REVEAL OR PUBLISH IT IN WHOLE OR PART
IV ALL RIGHTS RESERVED

CONFIDENTIAL AND PROPRIETARY APPLE SYSTEM DESIGN. FOR REFERENCE PURPOSE ONLY - NOT A CHANGE REQUEST

# DIVERSITY MODULE

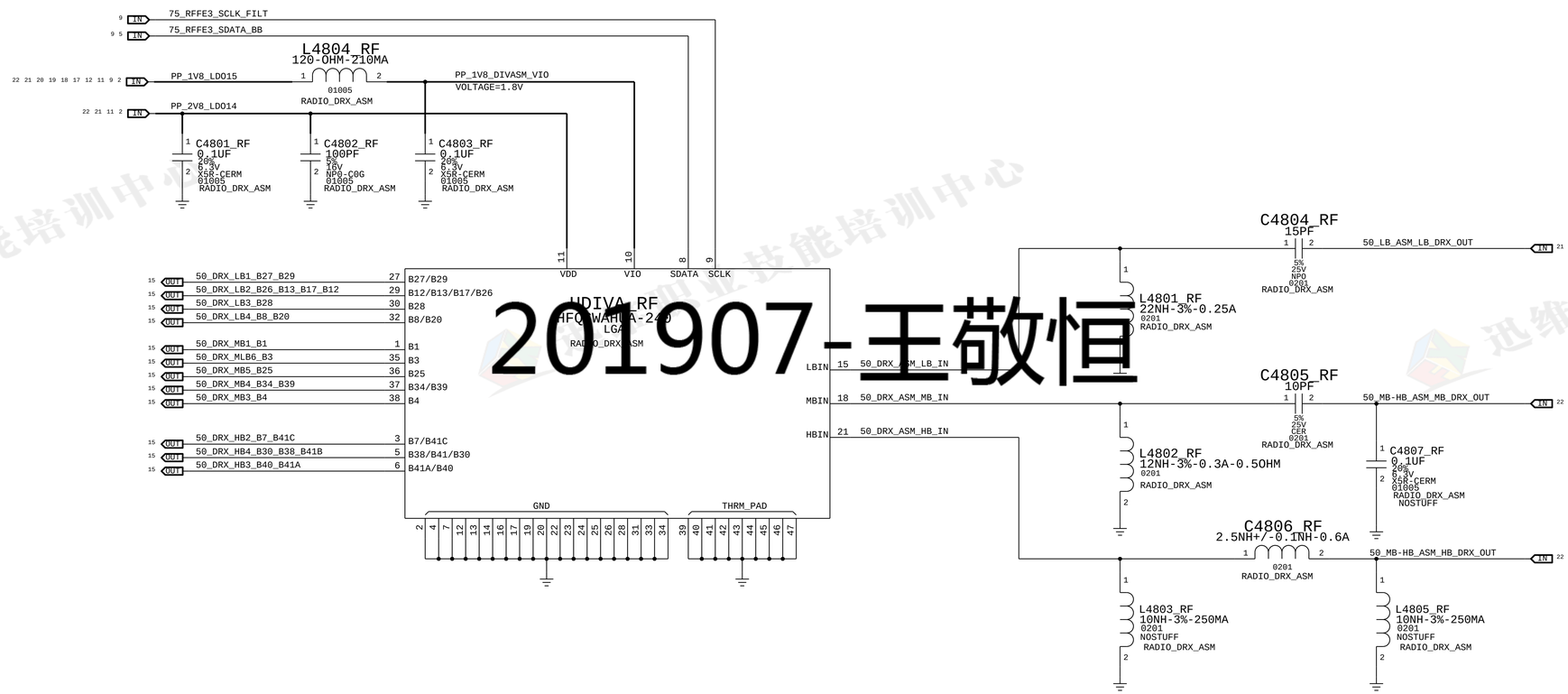


201907-王敬恒

CONFIDENTIAL AND PROPRIETARY APPLE SYSTEM DESIGN. FOR REFERENCE PURPOSE ONLY - NOT A CHANGE REQUEST

PAGE TITLE
CELLULAR FRONT END: DIVERSITY

Apple Inc.

DRAWING NUMBER 051-1902 SIZE D

REVISION A.0.0

BRANCH

PAGE 48 OF 51

SHEET 56 OF 59

NOTICE OF PROPRIETARY PROPERTY:
THE INFORMATION CONTAINED HEREIN IS THE PROPRIETARY PROPERTY OF APPLE INC.
THE POSESSOR AGREES TO THE FOLLOWING:
I TO MAINTAIN THIS DOCUMENT IN CONFIDENCE
II NOT TO REPRODUCE OR COPY IT
III NOT TO REVEAL OR PUBLISH IT IN WHOLE OR PART
IV ALL RIGHTS RESERVED

# SIM

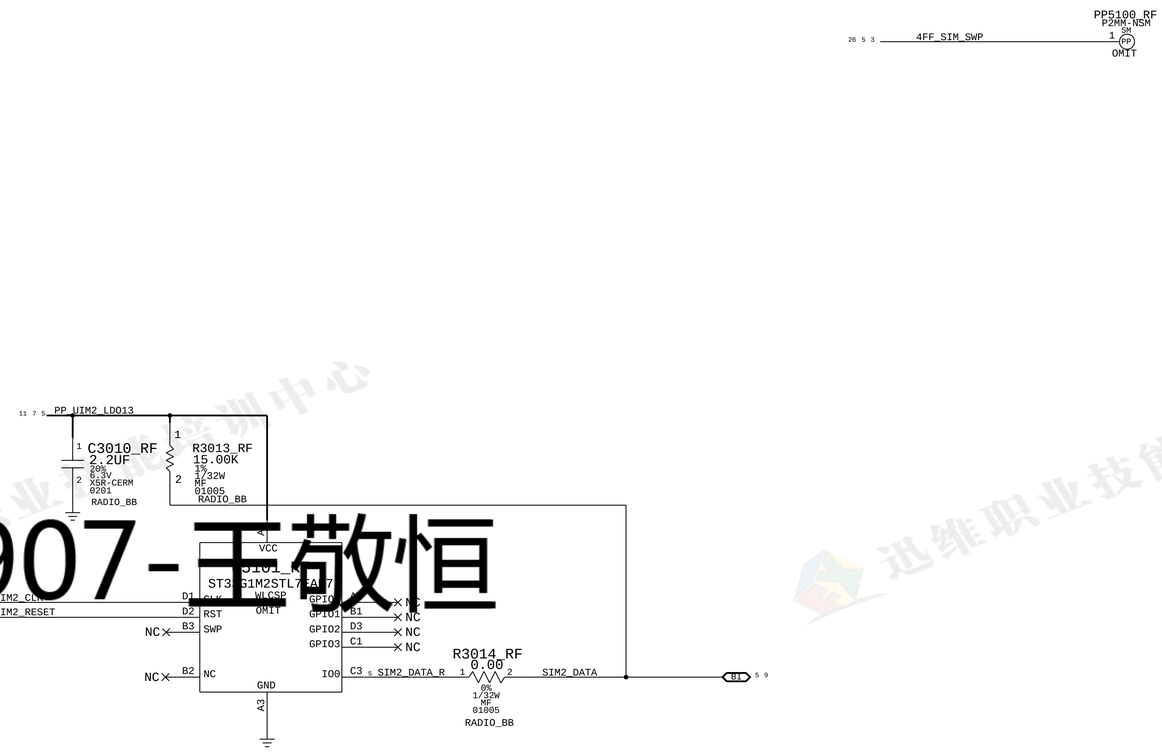


201907-王敬恒

CONFIDENTIAL AND PROPRIETARY APPLE SYSTEM DESIGN. FOR REFERENCE PURPOSE ONLY - NOT A CHANGE REQUEST

| | |
|---|---|
| PAGE TITLE | SIM |
| Apple Inc. | DRAWING NUMBER 051-1902 SIZE D |
| | REVISION A.0.0 |
| NOTICE OF PROPRIETARY PROPERTY: THE INFORMATION CONTAINED HEREIN IS THE PROPRIETARY PROPERTY OF APPLE INC. THE POSESSOR AGREES TO THE FOLLOWING: I TO MAINTAIN THIS DOCUMENT IN CONFIDENCE II NOT TO REPRODUCE OR COPY IT III NOT TO REVEAL OR PUBLISH IT IN WHOLE OR PART IV ALL RIGHTS RESERVED | BRANCH |
| | PAGE 49 OF 51 |
| | SHEET 57 OF 59 |

# WIFI/BT

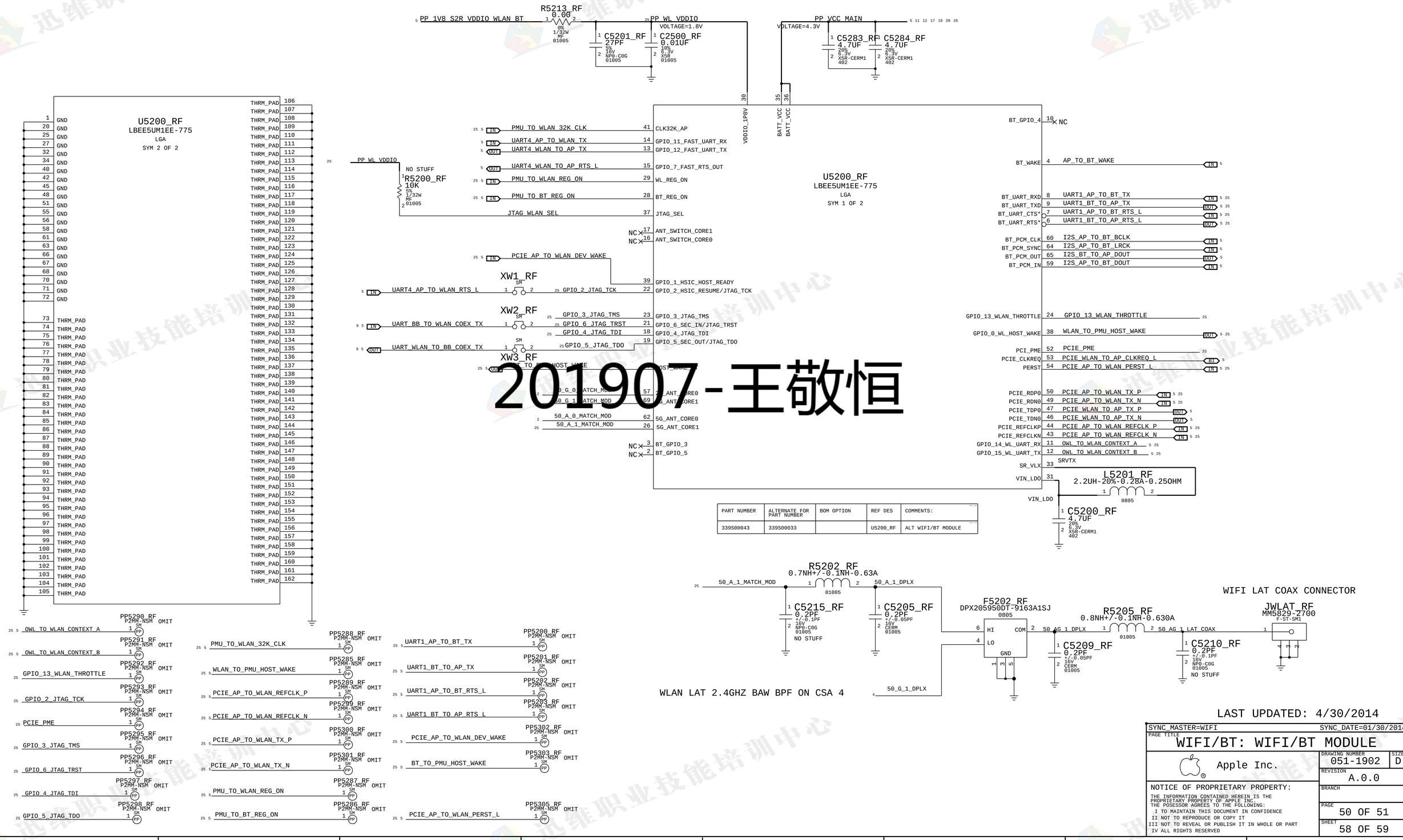


| PART NUMBER | ALTERNATE FOR PART NUMBER | BOM OPTION | REF DES | COMMENTS: |
|---|---|---|---|---|
| 339S00043 | 339S00033 | | U5200_RF | ALT WIFI/BT MODULE |

201907-王敬恒

LAST UPDATED: 4/30/2014

SYNC_MASTER=WIFI SYNC_DATE=01/30/2014

PAGE TITLE
WIFI/BT: WIFI/BT MODULE

Apple Inc.

DRAWING NUMBER 051-1902 SIZE D
REVISION A.0.0
BRANCH
PAGE 50 OF 51
SHEET 58 OF 59

NOTICE OF PROPRIETARY PROPERTY:
THE INFORMATION CONTAINED HEREIN IS THE PROPRIETARY PROPERTY OF APPLE INC.
THE POSESSOR AGREES TO THE FOLLOWING:
I TO MAINTAIN THIS DOCUMENT IN CONFIDENCE
II NOT TO REPRODUCE OR COPY IT
III NOT TO REVEAL OR PUBLISH IT IN WHOLE OR PART
IV ALL RIGHTS RESERVED

# STOCKHOLM

ALL NETNAMES NEED TO BE CHECKED

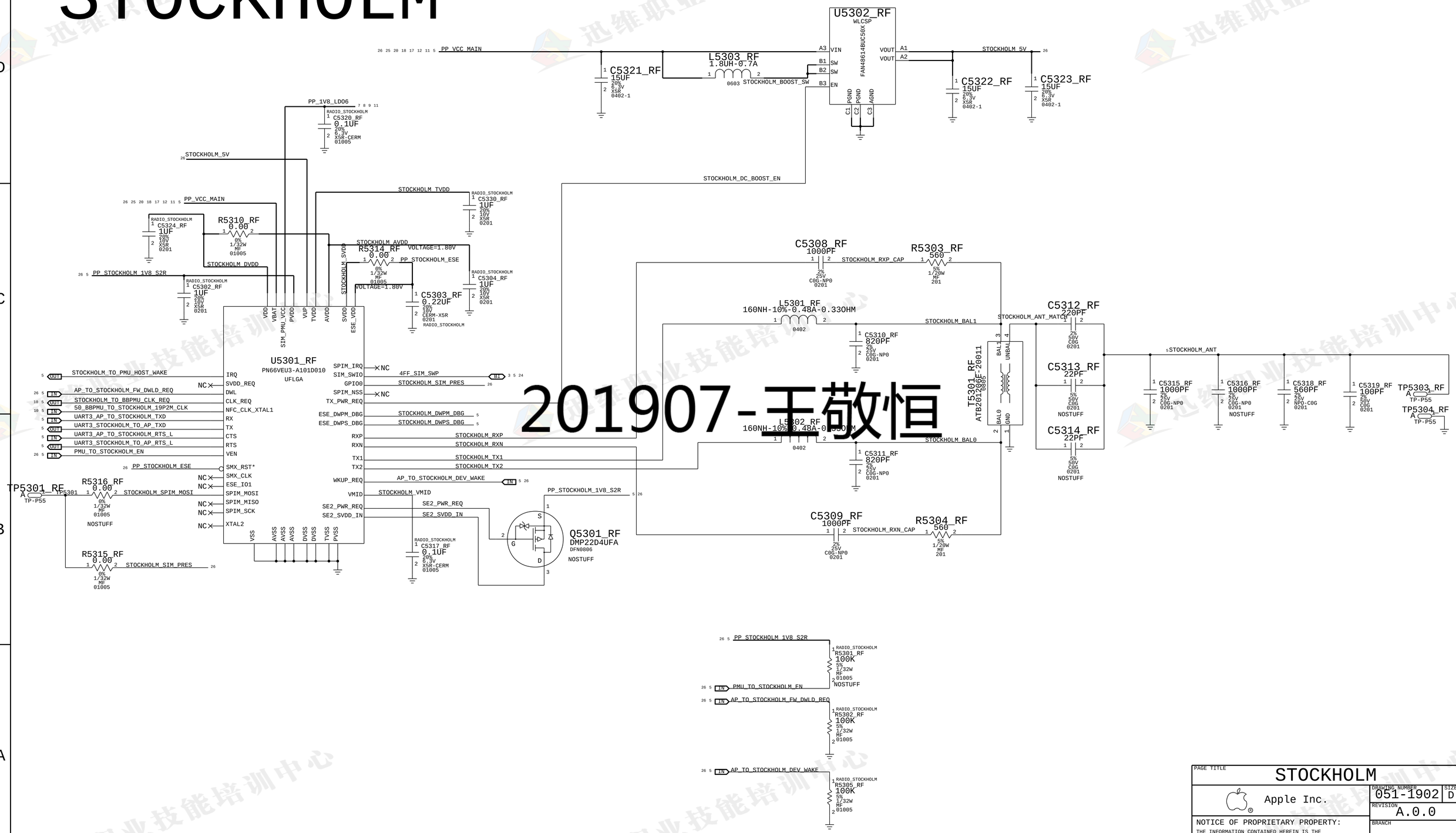


201907-王敬恒

| | |
|---|---|
| PAGE TITLE | STOCKHOLM |
| Apple Inc. | DRAWING NUMBER 051-1902 SIZE D |
| | REVISION A.0.0 |
| NOTICE OF PROPRIETARY PROPERTY: THE INFORMATION CONTAINED HEREIN IS THE PROPRIETARY PROPERTY OF APPLE INC. THE POSESSOR AGREES TO THE FOLLOWING: I TO MAINTAIN THIS DOCUMENT IN CONFIDENCE II NOT TO REPRODUCE OR COPY IT III NOT TO REVEAL OR PUBLISH IT IN WHOLE OR PART IV ALL RIGHTS RESERVED | BRANCH |
| | PAGE 51 OF 51 |
| | SHEET 59 OF 59 |