SIEMENS

Cerberus® PRO Detectors and Peripherals

Thermal (Heat) Detector
Model HI921

Architect & Engineer Specifications

- ☐ Built-in ISO*technology*™
- ☐ Compatible with Siemens Model `H'-series devices on the same loop (with Cerberus PRO Modular | FireFinder XLS/V | FC9–series fire-alarm control panels)
- ☐ Contains seven (7) field-selectable settings in a temperature range of 135°F – 175°F (57.2°C – 78.9°C)
- ☐ Provides a low-temperature warning of 40°F (4.4°C)
- ☐ Field programmable as rate-of-rise or fixed temperature
- ☐ Tri-color detector-status light-emitting diode (LED) with 360 ° view
- ☐ Compatible with Model 8720 | DPU (device programmer / loop tester)
- ☐ Utilizes advanced, microprocessor-based signal processing
- ☐ Each detector is self-testing:
  - complete diagnostics performed every 10 seconds
- ☐ Polarity insensitive via *SureWire™* technology
- ☐ Functions with Model DB-11–series mounting bases
- ☐ Superior electromagnetic interference (EMI) and radio-frequency interference (RFI) immunity
- ☐ Restriction of Hazardous Substances (RoHS compliant)
- ☐ UL 521 Listed, ULC Listed
- ☐ CSFM (#7272-0067:0258) Approved

Product Overview

The Intelligent Thermal (Heat) Detector (Model HI921) provides an advanced method of detection, address programming supervision – combined with sophisticated FACP communication. Model HI921 uses a state-of-the-art thermistor, microprocessor and advanced signal analysis, providing high reliability and accuracy.

Additionally, Each Model HI921 unit is UL listed including advanced built-in **ISO*technology***™ - a "True Class-X" SLC operation (use is optional) greatly improving system reliability and circuit integrity while providing advanced addressable fault finding.

Each model HI921 is a cost-effective, intelligent, addressable thermal detector that provides distinctive, advanced features: seven (7) field-selectable temperature settings specially tailored for application-specific detection needs combined with Class-X SLC operation built-in avoiding additional installation and material cost.

The temperature-range settings for each Model HI921 detector is between 135°F (57°C) – 175°F (79°C) with fixed and rate-of-rise programmability. This variance provides the customer with maximum flexibility to program the temperature settings to suit multiple application needs and changing environmental conditions.

Model HI921 can be configured to provide a low-temperature warning signal at 40°F (4.4°C). This feature – along with a compatible FACP (Cerberus PRO Modular | FireFinder XLS/V or with Cerberus PRO FC/FV922 or FC/FV924 FACPs) – serves as prevention of water freezing in pipes for sprinkler systems, meeting NFPA 72

Operation

Model HI921 also utilizes a modern, accurate and shock-resistant thermistor to sense significant changes in temperature.

Each Model HI921 detector has seven (7) pre-programmed parameter sets that can be selected by the Siemens FACP.

Model HI921
Thermal (Heat) Detector

1. **Thermistor**

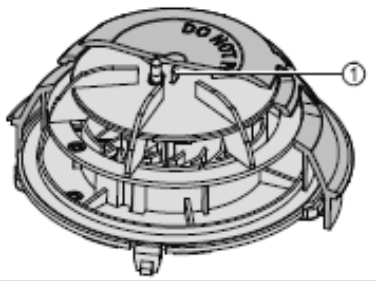

NOTE: Each detector consists of a dust-resistant chamber; a solid state, functional internal sensor, and microprocessor-based electronics with a low-profile plastic housing.

Thermal (Heat) Detector

Detector Supervision and Testing

Model HI921 contains a tri-color LED indicator, capable of flashing any one (1) of three (3) distinct colors: GREEN | YELLOW | RED. During each flash interval, the microprocessor-based detector monitors the following fire-system conditions:

- Temperatures reaching programmed thresholds
- Internal sensors and electronics are functional

Based on the results of the monitoring, the LED indicator flashes the following:

FLASH COLOR	CONDITION	FLASH INTERVAL [in seconds]
GREEN*:	Normal supervisory operation. Temperature has not reached programmed alarm thresholds or set points.	10
YELLOW:	Detector is not operating at normal capacity and needs replacement.	4
RED:	`Alarm' condition	1
NO FLASH:	Detector is not powered.	–

* denotes LED can be turned OFF
Please follow the corresponding description of the panel used.

A quick visual inspection is sufficient to indicate the condition of the detector at any time.
If more detailed information is required, a printed report can be provided from the respective Cerberus PRO Modular | FireFinder XLS/V or Model FC9-series FACPs that indicates the status and settings assigned to each detector.

Installation

All Model HI921 detectors use a surface-mounting base, Model DB2-HR | DB-11 or Model DB-11E, which mounts on a 4-inch (10.2 cm.) octagonal, square or single-gang electrical box. The base utilizes screw-clamp contacts for electrical connections and self-wiping contacts for increased reliability.

The Model DB-11 detector base can be used with the optional Siemens Model LK-11 detector locking kit, which contains 50 detector locks and an installation tool to prevent unauthorized removal of the detector head. Model DB-11 has aesthetically conducive plugs to cover the outer mounting-screw holes.

Model HI921 may be installed on the same initiating circuit with the Siemens Model `H'-series detectors and devices [when used with Cerberus PRO Modular | Model FC9-series | FireFinder XLS/V FACPs] –

- HFP-11, HFPT-11
- Model `XTRI'-series interfaces
- Model `XMS'-series manual stations
- Model `HTRI'-series interfaces
- Model `HMS'-series manual stations
- Model HCP output-control detection devices
- Model `HZM'-series of addressable, conventional zone modules

Application Data

Installation of Model HI921 intelligent, addressable thermal detector requires a two-wire SLC circuit. In many retrofit cases, existing wiring may be used. `T-tapping' is permitted only for Style 4 (Class B) wiring. Model HI921 is polarity insensitive when not used in Class-X mode, which can reduce installation and debugging times. The unit's value is multiplied with built-in **ISO*technology*** the True Class-X - NFPA 72 compliant SLC isolation feature supporting up to 252 isolation ready devices per loop. When used in mixed mode a maximum of 30 non-isolated devices between isolation devices (wired in polarity-insensitive mode). Each detector fits into one (1) wall-or-ceiling footprint, and only occupies one (1) address on the signal-line circuit (SLC).

Model HI921 can be applied within the maximum 50-feet (15.24 m.) center spacing (2,500 sq. ft. [232.3 sq. m.]) per Underwriters' Laboratories. This application guide is based on ideal conditions, specifically, smooth-ceiling surfaces, minimal air movement, and no physical obstructions between potential fire sources and the actual detector. Do not mount detectors in close proximity to heating | ventilation | air-conditioning (HVAC) outlets. Exposed joists or beamed ceilings may also affect safe spacing limitations for detectors.

Should questions arise regarding detector placement, observe NFPA 72 guidelines. Good fire-protection system engineering and common sense dictate how and when fire detectors are installed and used. Contact your local Siemens – Fire Safety distributor or sales office whenever you need assistance applying Model HI921 in unusual applications.

Be sure to follow NFPA guidelines and UL Listed / ULC Listed installation instructions – included with every Siemens – Fire Safety detector – and local codes for all fire-protection equipment.

Specifications

Model HI921 is a plug-in, (2) two-wire thermal (heat) detector, compatible with Cerberus PRO Modular | FireFinder XLS/V and Model FC9-series FACPs. Each Model HI921 detector has microcomputer-chip technology and highly stable, solid-state electronic circuitry. Model HI921 detectors utilize a modern, accurate and shock-resistant thermistor to sense temperature changes. This electronic-sensing method virtually eliminates thermal lag associated with mechanical temperature-sensing devices and provides almost instantaneous temperature status to the FACP.

Model HI921 provides seven (7) field-selectable, pre-programmed temperature settings:

Fixed Temperature set points (5)	Rate of Rise set points (2)
• Fixed 135°F (57°C) • Fixed 145°F (63°C) • Fixed 155°F (68°C) • Fixed 165°F (74°C) • Fixed 175°F (79°C)	• Rate-of-Rise: 15°F / min. (8.3°C) at fixed 135°F (57°C) • Rate-of-Rise: 15°F / min. (8.3°C) at fixed 175°F (79°C)

Additionally, the Model HI921 detector has the following optional feature:

- Model HI921 provides indication of potential water freezing for sprinkler systems, via configuration for reporting a low-temperature warning of 40°F (4.4°C).

  This feature is compatible with Cerberus PRO Modular systems, as well as with FireFinder XLS/V and Cerberus PRO FC/FV922 or FC/FV924 FACPs.

Mounting Diagrams | Dimensions

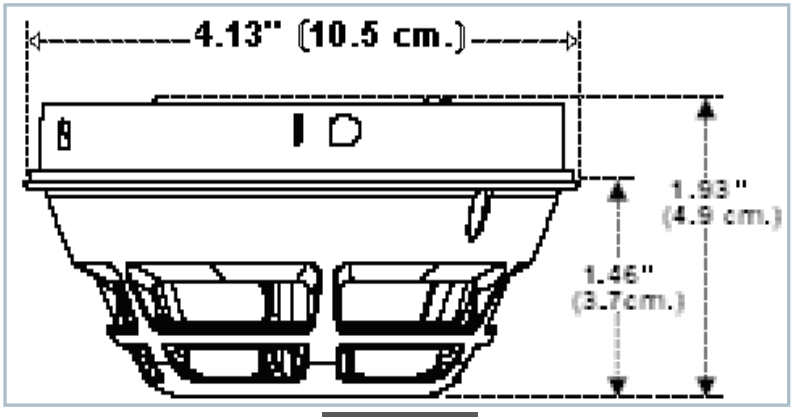

Model HI921

Field-Device Programmer / Test Unit

Model HI921 is compatible with the Siemens field-device programmer / test unit (Model 8720 | DPU), which is a compact, portable and menu-driven accessory for electronically programming and testing these addressable detectors promptly and reliably. For instance, the field technician selects the accessory's program mode, and enters the desired address.

Model DPU eliminates the need for cumbersome, unreliable mechanical programming methods (e.g. – dials and rotary switches), and reduces installation and service costs by electronically programming and testing the detector prior to installation. When set in `test' mode, Model DPU will perform a series of diagnostic tests without altering the address or other stored data, allowing technicians to determine if the detector is operating properly.

Each field-device programmer / test unit operates on AC power or rechargeable batteries, providing flexibility and convenience in the programming / testing of fire-safety equipment from practically any location. Additionally, with the use of a Model DPU unit, there is no longer a cause for concern with any vibration, corrosion and other deteriorating conditions that can accompany the vitality of a mechanical-addressing mechanism.

The encompassing result is an intelligent detector that provides enhanced detection capability to a wide range of products of combustion – while offering unsurpassed rejection to nuisance-alarm sources, including: dust | steam | aerosols and other deceptive phenomena that could cause false alarms.

Technical Data

OPERATING TEMPERATURE:	+32° – +120°F (0° – +49°C) [with 145°F (63°C) | 155°F (68°C) | 165°F (74°C) and 175°F (79°C) alarm-threshold settings] +32° – +100°F, (0° – +38°C) [with 135°F (57°C) alarm threshold setting]
THERMAL RATING:	Model HI921 provides seven (7) field-selectable, pre-programmed temperature settings: • Fixed 135°F (57°C) • Fixed 145°F (63°C) • Fixed 155°F (68°C) • Fixed 165°F (74°C) • Fixed 175°F (79°C) • Rate-of-Rise: 15°F / min. (8.3°C) at fixed 135°F (57°C) • Rate-of-Rise: 15°F / min. (8.3°C) at fixed 175°F (79°C)
RELATIVE HUMIDITY:	0 – 95% (non-condensing)
AIR PRESSURE:	No effect
INPUT VOLTAGE RANGE:	16VDC – 30VDC
`ALARM' CURRENT, MAX.:	410µA
`STANDBY' CURRENT, MAX.:	250µA
MAXIMUM SPACING:	50–ft. (15.24 m.) centers (2500 sq. ft. | 232.3 sq. m.), per NFPA 72 and ULC-S524
DETECTOR WEIGHT:	0.317 Lbs. (0.144 kg.)

Panel Compatibilities

XLS	6300	FireFinder (fire)
XLSV	6340	FireFinder (fire w/ voice)
Cerberus PRO Modular	8300	Cerberus PRO Modular 2500-point addressable (fire & fire with voice)
FC901	9813	Cerberus PRO 50-point addressable
FC922	9815	Cerberus PRO 252-pt. addressable (fire)
FC924		Cerberus PRO 504-pt. addressable (fire)
FV922	9821	Cerberus PRO 252-point addressable (fire w/ Intelligent Voice Communication [IVC])
FV924		Cerberus PRO 504-pt. addressable (fire w/ Intelligent Voice Communication [IVC])

Details for Ordering

MODEL OR TYPE	PART NUMBER	PRODUCT
HI921	S54320-F5-A2	Thermal (Heat) Detector

Compatible Devices:

MODEL OR TYPE	PART NUMBER	PRODUCT
ABHW-4B	S54320-F13-A1	Buzzer Version Audible Base (standard 3,000 Hz tone)
ABHW-4BZ	S54320-F13-A2	Audible Base
ABHW-4S	S54320-F14-A1	Sleeping Room Version , 520 Hz Low Frequency Audible Base
ABHW-4SZ	S54320-F14-A2	Audible Base
ADB-BOX	500-698360	Surface Mount Adapter Box for Audible Base
DB2-HR	S54370-F12-A1	Relay base compatible with Siemens standard and advanced detectors
DB-11	500-094151	Detector Mounting Base
DB-11E	500-094151E	Detector Base, small
RL-HC	500-033230	Remote Alarm Indicator: 4" (10.2 cm) octagon-box mount, red
RL-HW	500-033310	Remote Alarm Indicator: single-gang box mount, red
LK-11	500-695350	Base Locking Kit

See: www.STI-USA.com for further details on ordering Model STI-9604

In Canada order:

MODEL OR TYPE	PART NUMBER	PRODUCT
DB-11C	500-095687	Detector Mounting Base, ULC Listed

This Page Left Intentionally Blank

NOTICE – The information contained in this data-sheet document is intended only as a summary, and is subject to change without notice.
The product(s) described here has/have a specific instruction sheet(s) that cover various technical, limitation and liability information.

Copies of install-type, instruction sheets – as well as the *General Product Warning and Limitations* document, which also contains important data, are provided with the product, and are available from the Manufacturer.

Data contained in the aforesaid type of documentation should be consulted with a fire-safety professional before specifying or using the product.

Any further questions or assistance concerning particular problems that might arise, relative to the proper functioning of the equipment, please contact the Manufacturer.

SIEMENS

Cerberus® PRO

Siemens Industry, Inc.
Smart Infrastructure - Building Products
2 Gatehall Drive • Parsippany, NJ 07054
Tel: (973) 593-2600

November – 2023
(Rev. 11)