SIEMENS

Peripheral and Detection Initiating Devices

XMS-Series Manual Pull Stations

Addressable & Conventional Models

Architect & Engineer Specifications

- ☐ Single & Dual-Action models
- ☐ Built-in ISO*technology*™
  - Complies with NFPA 72 Class X (Style 7) survivability requirements.
  - Supports up to 252 X-Series isolation peripherals per SLC / DLC
  - Supports up to 30 addressable devices between isolator devices
- ☐ Compatible with current Siemens Fire Alarm Control Units (FACU's)
- ☐ Low current draw
- ☐ Polarity insensitive (in non-isolation mode) via SureWire technology
- ☐ Multi-color status LED
- ☐ T-45 reset key
- ☐ Model XMS-2S:
  - Two stage operation via unique activation key
  - T-45 reset key for device reset
- ☐ Minimal mounting depth allowing compatibility with standard single gang electrical boxes in retrofit sites
- ☐ Trouble indication during service and maintenance
- ☐ Single action, Dual-action, and metal versions available
- ☐ French, Portuguese, and Spanish versions available
- ☐ UL38 Listed
- ☐ ULC-S528 Listed
- ☐ RoHS compliant
- ☐ FM Approved

Product Overview

The XMS-Series of manual pull stations are a complete addressable and conventional pull station portfolio including single action, dual-action, 2-Stage, and metal versions. The addressable versions feature built-in Class X (Style 7) isolation capability for increased system survivability. All models feature a T-45 reset key to match the fire alarm panel enclosure. Addressable models also feature a tri-color status LED to indicate normal, alarm, and trouble status. All models utilize one address.

The manual stations can be commissioned to operate in non-isolation (polarity insensitive) or isolation with Class X mode of operation.

Specifications

Models XMS-S, XMS-D, XMS-DA, XMS-2S, and XMS-M are compatible with Siemens FACPs. The Model XMS-S is a single action pull station in a plastic housing that requires one action by the user to initiate the alarm. Models XMS-D, XMS-2S, and XMS-DA are dual-action pull stations in a plastic housing that require two actions by the user to initiate an alarm. The Model XMS-M is a single action pull station in a metal housing that requires one action by the user to initiate the alarm. These models are field installed addressable devices containing advanced control panel communication technology.

The XMS-Series manual pull stations feature a "maintenance trouble" that places the fire alarm panel into a trouble condition if an XMS is accidentally left in an armed status when the cover is removed for maintenance work.

This technology provides bi-directional communication with the connected control panel. To reset the stations, insert the Siemens T-45 key provided into the key lock and turn the key 10-15 degrees counterclockwise as the arrow shows. The cover will move upward to the normal position. Rotate the key clockwise and remove key from the lock. At Normal position the top of the Cover is flush with the top surface of the Base. Reset the Fire Alarm Control Panel to clear the alarm.

The addressable XMS pull station variants are compatible with all current models of Desigo Fire Safety & Cerberus PRO commercial fire alarm control panels. These devices can be wired in either Isolation Mode or Polarity Insensitive Mode Wiring.

The XMS-S & XMS-M manual station front cover has a recess pocket to pull down and locks in position after the alarm is initiated. The XMS-D, XMS-DA & XMS-2S manual stations have an additional lever labeled "PUSH HERE THEN" to get access to the front cover pocket to initiate the alarm.

The XMS-Series Manual Pull Stations are UL and ULC listed, FM approved, and RoHS compliant.

Model XMS-D

Mounting Diagram

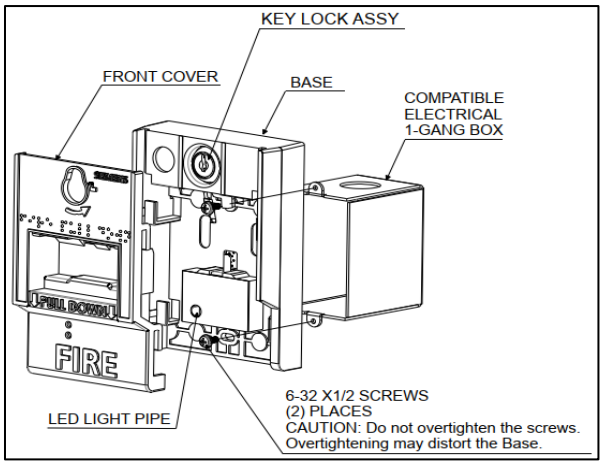

Technical Data

Operating Voltage Range	13 - 32VDC
Max Average Operating Current @ 24v:	500µA
Operating Temperature Range	32° — 120°F (0° — 49°C)
Operating Humidity Range	0 — 95%, RH

Physical Properties

Construction:	High impact polycarbonate plastic
	Aluminum
Shipping Weight:	1.0 lbs
Dimensions:	5.50" H x 4.0" W x 1.250" D
Compliance:	ADA
Compatible Electrical Boxes:	2-1/2" deep 1-gang box

Model XMS-DA

Model XMS-2S

Order Details

Model or Type	Part Number	Description
XMS-S	S54321-F7-A1	Addressable Single Action Manual Pull Station with Isolation
XMS-D	S54321-F8-A1	Addressable Dual-Action Manual Pull Station with Isolation
XMS-M	S54321-F19-A1	Addressable Single Action Metal Pull Station with Isolation
XMS-SP	S54321-F9-A1	Addressable Single Action Manual Pull Station with Isolation - Portuguese Text
XMS-DP	S54321-F10-A1	Addressable Dual-Action Manual Pull Station with Isolation - Portuguese Text
XMS-SE	S54321-F11-A1	Addressable Single Action Manual Pull Station with Isolation - Spanish Text
XMS-DE	S54321-F12-A1	Addressable Dual-Action Manual Pull Station with Isolation - Spanish Text
XMH-501	S54321-F18-A1	Conventional Dual-Action Manual Pull Station for Agent Release
XMS-501	S54321-F16-A1	Conventional Dual-Action Manual Pull Station
XMS-51	S54321-F15-A1	Conventional Single Action Manual Station with Auxiliary Relay and Key Switch
SMBOX-XMP	S54321-F20-A1	Surface Mounting Backbox for X-Series Manual Stations
APLT-XMP	S54321-F21-A1	Adapter Plate for X-Series Manual Stations to Legacy Surface Backboxes
4DGBOX- XMP	S54321-F22-A1	Adapter Plate for X-Series Manual Stations to 4" and Double-Gang Backboxes

Specific Details for Canadian Orders

Model or Type	Part Number	Description
XMS-DA	S54321-F13-A1	Addressable Dual-Action Manual Pull Station with Isolation and Auxiliary contact – French Text
XMS-2S	S54321-F14-A1	Addressable 2-Stage Dual-Action Manual Pull Station with Isolation and Auxiliary contact – French Text
XMS-51C	S54321-F23-A1	Conventional Dual-Action Pull Station with Auxiliary contact – French Text
XMS-53C	S54321-F24-A1	Conventional 2-Stage Dual-Action Pull Station with Auxiliary contact – French Text

This Page Left Intentionally Blank

NOTICE – The information contained in this data-sheet document is intended only as a summary, and is subject to change without notice.
The product(s) described here has/have a specific instruction sheet(s) that cover various technical, limitation and liability information.

Copies of install-type, instruction sheets – as well as the *General Product Warning and Limitations* document, which also contains important data, are provided with the product, and are available from the Manufacturer.

Data contained in the aforesaid type of documentation should be consulted with a fire-safety professional before specifying or using the product.

Any further questions or assistance concerning particular problems that might arise, relative to the proper functioning of the equipment, please contact the Manufacturer.

SIEMENS

Siemens Industry, Inc.
Smart Infrastructure - Building Products
2 Gatehall Drive • Parsippany, NJ 07054
Tel: (973) 593-2600

November - 2025
(Rev. 4)