SIEMENS

Sinteso™

Detector base and accessories

FDB22x, FDB20x, FDB2x1-AA, DBZ1190-Ax, FDBZ295, FDBZ291, DBZ1193A, FDBH291, FDBZ293, FDB2x1, FDB29x, FDUD290, DBZ1194, FDBZ294, FDZ291

Adressed (FDnet), collective

- Base made from impact-resistant and scratch-resistant plastic
- Screwless connection terminals enable connection without any tools (spring clip principle)
- FDB2x1-AA incl. 1 micro terminal
- Completely covered by detector
- FDB201, FDB201-AA, FDB221, FDB221-AA for recess-mounted or surface-mounted cable entry
- FDB202, FDB222 for flush mounting
- Accessories for surface mounting, in humid or wet environments, theft protection, impact protection, dust protection, location inscription, and detector heating unit when there is a risk of moisture condensation or icing, seal for higher protection category
- Version for addressed or collective fire detectors

CE

Features

- Universal base suitable for surface-mounted and recess-mounted supply lines
- Extra-long mounting slits allow existing drill holes from older systems to be reused
- A large opening in the detector base makes it easy to feed the cables through
- The detector line can be connected without any tools: The wire can be inserted easily by hand
- Loop contact
- Space for auxiliary terminals, for the connection of two alarm indicators, cable shielding, or the connection of a detector heating unit
- Designation plate:
  - For easy identification of point detectors
  - Can be mounted on detector bases and base attachments

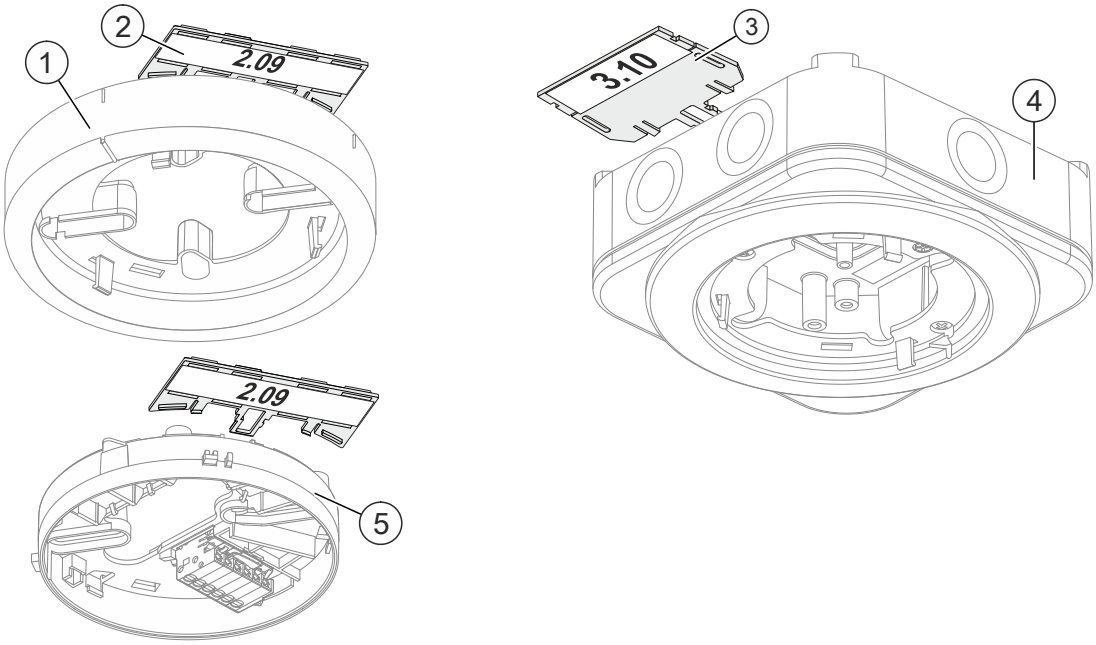

1 Base attachment FDB291
2 Designation plate FDBZ291
3 Designation plate DBZ1193A
4
- Base attachment humid FDB293
- Base attachment wet FDB295

5
- Detector base FDB2x1
- Detector base incl. 1 micro terminal FDB2x1-AA
- Flat detector base FDB2x2

Eco-friendly

- Environmentally friendly processing
- Reusable materials

Use

Collective detector base FDB201 / FDB201-AA

Function:

- Detector base with stilts for fire detectors with collective signal processing
- 'Gray' connection terminals, 0.2…1.5 mm^2 conductor cross-section
- FDB201-AA also contains micro terminal DBZ1190-AA

Use:

- For recess-mounted cable entry
- For surface-mounted cable entry up to a cable diameter of 6 mm

Addressable detector base FDB221 / FDB221-AA

Function:

- Detector base with stilts for fire detectors with addressable signal processing
- 'Orange' connection terminals, 0.2…1.5 mm^2 conductor cross-section
- FDB221-AA also contains micro terminal DBZ1190-AA

Use:

- For recess-mounted cable entry
- For surface-mounted cable entry up to a cable diameter of 6 mm

Flat, collective detector base FDB202

Function:

- Flat detector base for fire detectors with collective signal processing
- 'Gray' connection terminals, 0.2…1.5 mm^2 conductor cross-section

Use:

- For flush mounting; only for recess-mounted cable entry

Flat, addressable detector base FDB222

Function:

- Flat detector base for fire detectors with addressable signal processing
- 'Orange' connection terminals, 0.2…1.5 mm^2 conductor cross-section

Use:

- For flush mounting; only for recess-mounted cable entry

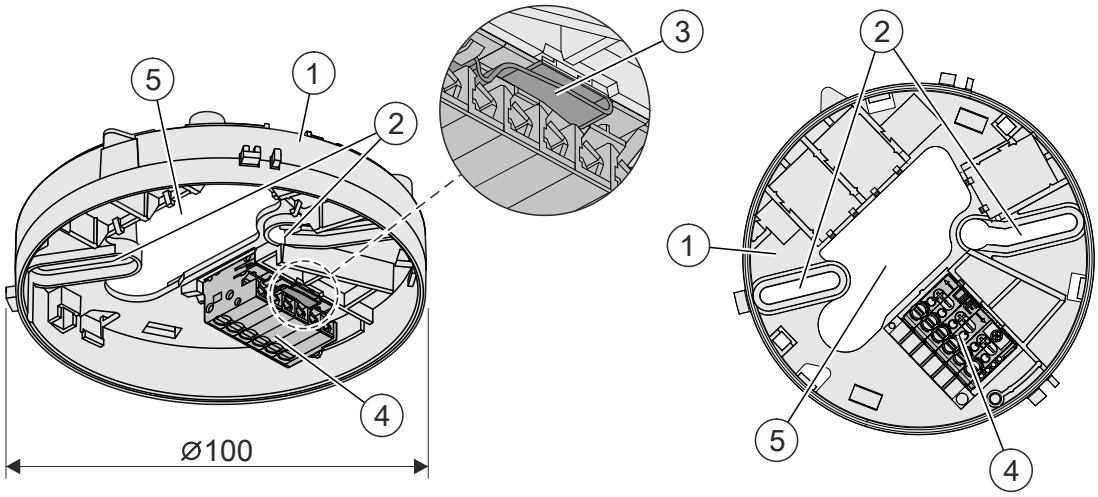

1 FDB2x1 / FDB2x1-AA

- Base height: 22 mm
- When using the point detector: 54 mm

FDB202 / FDB222

- Base height: 17 mm
- When using the point detector: 49 mm

2 Mounting slits
3 Loop contact
4 Screwless connection terminals
5 Opening for cable entry

DBZ1190-AA micro terminal and DBZ1190-AB connection terminal	
	• Micro terminal DBZ1190-AA – Cable cross section up to max. 0.5 mm² • Connection terminal DBZ1190-AB – Cable cross section up to max. 2.5 mm² – For connecting two external alarm indicators or the cable shielding

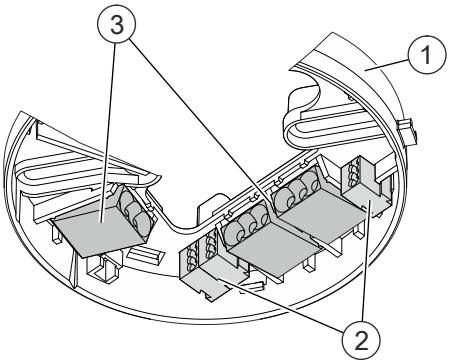

1 Detector base FDB2xx / FDB2x1-AA
2 Micro terminal DBZ1190-AA
3 Connection terminal DBZ1190-AB

Sealing element FDBZ295	
	Function: • For improving the protection category. However, detectors can no longer be installed or removed using the detector exchanger. **Note: Cannot be used in conjunction with designation plate FDBZ291!**

Designation plate FDBZ291	
	• For labeling with the location address • Can only be used without sealing element FDBZ295

Designation plate DBZ1193A	
	• For labeling with the location address • Can only be used with base attachment wet FDB295 or base attachment humid FDB293

Detector heating unit FDBH291	
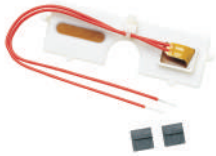	• For operating point detectors in critical ambient conditions during icy conditions or when there is a danger of moisture condensation. Examples of application: Cold stores, attics, loading ramps, cheese cellars • Optimum function is only guaranteed in conjunction with base attachment wet FDB295 or base attachment humid FDB293. • The point detector temperature increases by approximately 2 °C over the operating temperature and thus avoids moisture condensation on the detector. • Mounted quickly: The detector heating unit clicks into place in the detector base.

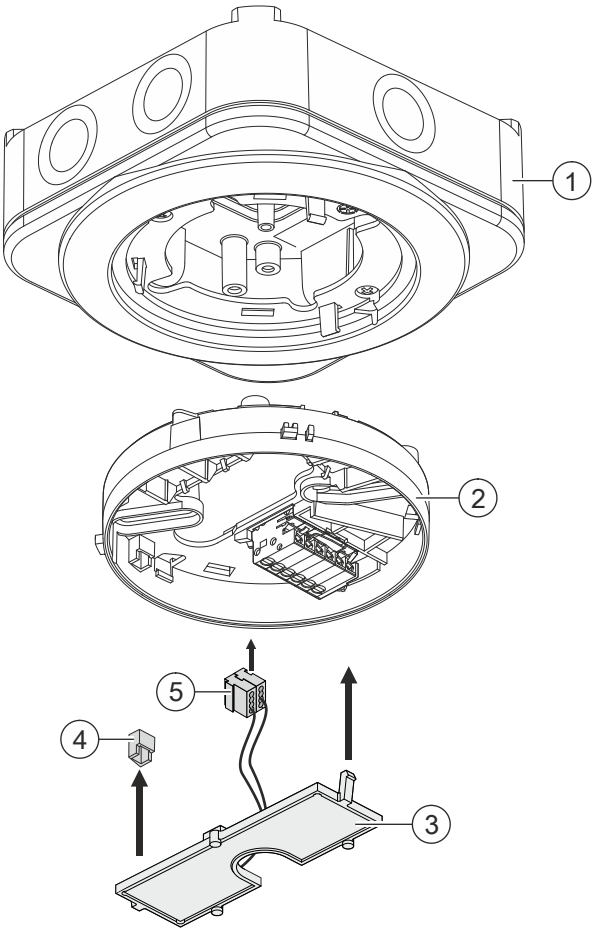

1 • Base attachment humid FDB293
  • Base attachment wet FDB295
2 Detector base FDB2x1 / FDB2x1-AA, FDB2x2
3 Detector heating unit FDBH291
4 Connection terminal DBZ1190-AB
5 Micro terminal DBZ1190-AA

Detector locking device FDBZ293	
	• For protection against theft of the point detector • Set screw M3 x 6 mm prevents the point detector being unscrewed from the detector base • Point detector can only be removed with the appropriate Allen key

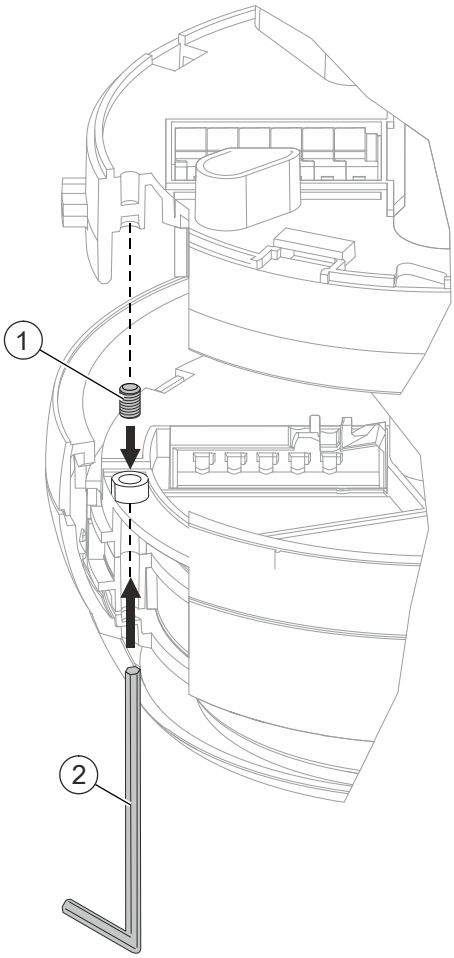

1 Set screw
2 Allen key

Base attachment FDB291	
	Function: • For routing surface-mounted cables larger than Ø 6 mm • Detector base is secured with a snap fastener

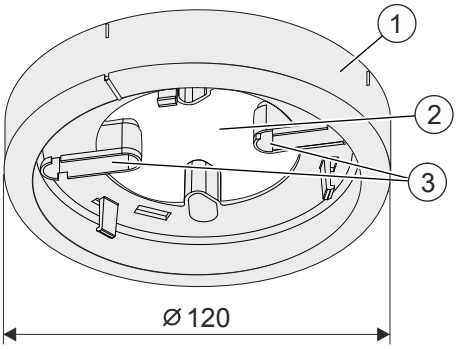

1 • Base height: 25 mm
  • When using the point detector: 60 mm
2 Opening for cable entry
3 Mounting slits

Base attachment humid FDB293	
	• For achieving a higher protection category • For mounting in wet or humid environments • Required when using detector heating unit FDBH291 • Required when using protective cage DBZ1194 or EMC-protective cage FDBZ294 • Mounted between detector base and ceiling • Detector base mounted quickly: The detector base simply clicks into place in base attachment humid FDB293.

Base attachment wet FDB295	
	• Base attachment wet with additional integrated rubber seal for mounting in wet or humid environments • For achieving a higher protection category • For mounting in wet or humid environments • Required when using detector heating unit FDBH291 • Required when using protective cage DBZ1194 • Mounted between detector base and ceiling • Detector base mounted quickly: The detector base simply clicks into place in base attachment wet FDB295.

Base adapter FDB241	
	Function: • For adapting AnalogPLUS and SIGMALOOP for Sinteso detector systems • Can be set with jumper on replaced detector

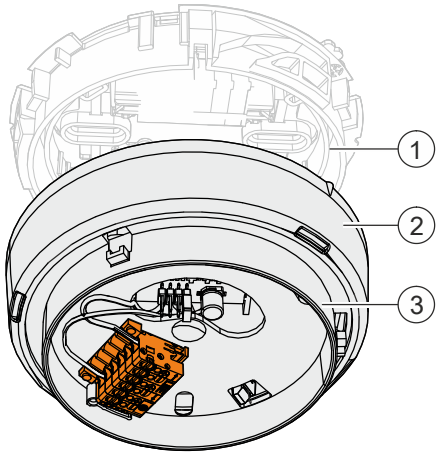

1 • SPF3600 detector base (SIGMALOOP)
  • DB1131A detector base (AnalogPLUS)

2 • Base height: 29.5 mm
  • When using the point detector: 74.5 mm

3 Adapter incl. detector base, 'orange' connection terminals

Base adapter FDB251	
	Function: • For adapting Interactive for Sinteso detector systems • Can be set with jumper on replaced detector

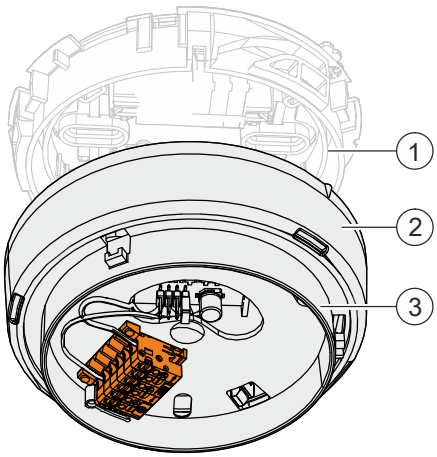

1 DB1151A detector base (interactive)

2
- Base height: 29.5 mm
- When using the point detector: 74.5 mm

3 Adapter incl. detector base, 'orange' connection terminals

Base adapter FDB281	
	Function: • For adapting MS8/PMT for Sinteso detector systems

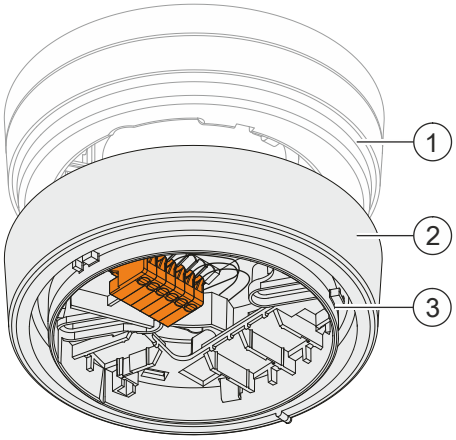

1 Detector base Z84 (MS8/PMT)

2
- Base height: 37 mm
- When using the point detector: 73 mm

3 Adapter incl. detector base, 'orange' connection terminals

Base adapter FDB299	
	Function: • For adapting AlgoRex (collective) and SIGMACON for Sinteso detector systems

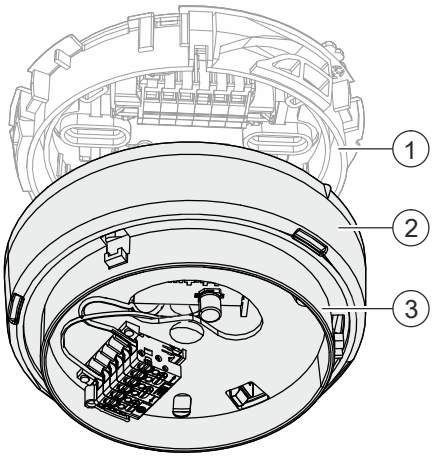

1 • DB1101A detector base (collective, AlgoRex)
  • SPF600 detector base (SIGMACON)

2 • Base height: 29.5 mm
  • When using the point detector: 74.5 mm

3 Adapter incl. detector base, 'gray' connection terminals

Removal tool for adapter FDUD290	
	Function: • For removing base adapters FDB2xx with detector exchanger, detector exchanger and tester, or detector tester

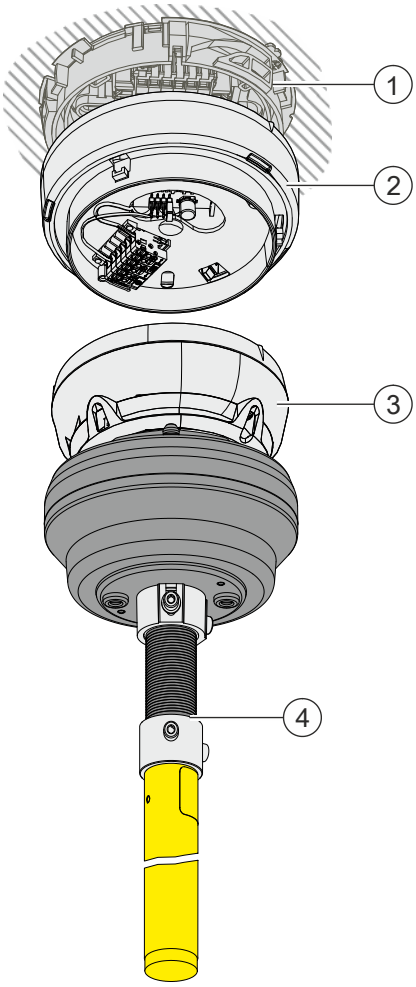

1 Detector base
2 Base adapter FDB241, FDB251 or FDB299
3 FDUD290 removal tool for adapter
4
- FDUD291 detector exchanger
- FDUD292 Detector exchanger and tester
- FDUD293 intelligent detector tester

Protective cage DBZ1194	
	• To protect the point detector from damage • Can only be mounted in combination with the base attachment humid FDB293 or base attachment wet FDB295

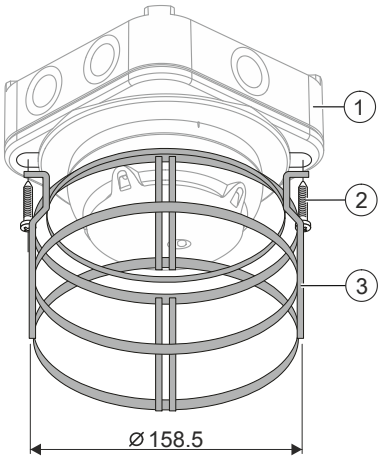

1 • FDB293 base attachment humid
  • FDB295 base attachment wet
2 Screw
3 Protective cage DBZ1194

EMC-protective cage FDBZ294	
	• To protect the point detector from strong electromagnetic fields • Can only be mounted in combination with the base attachment humid FDB293 or base attachment wet FDB295

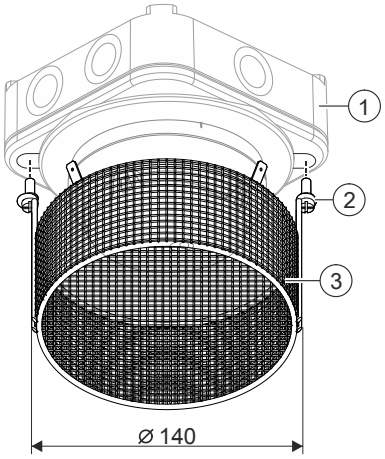

1 • FDB293 base attachment humid
  • FDB295 base attachment wet
2 Screw
3 Protective cage FDBZ294

Detector dust cap FDZ291	
	• To cover detectors as protection against dust during the construction phase

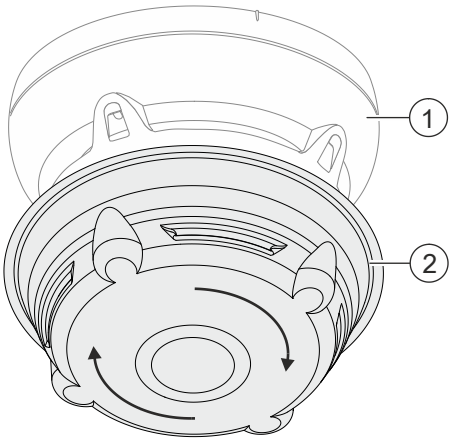

1 Point detector
2 Detector dust cap FDZ291

Type Overview

Type	Designation	Order no.	Weight [kg]
FDB201	Detector base collective	A5Q00003814	0.026
FDB202	Collective detector base, flat	S54319-F3-A1	0.025
FDB201-AA	Collective detector base incl. 1 micro terminal DBZ1190-AA	A5Q00012742	0.029
FDB221	Detector base, addressable	A5Q00001664	0.026
FDB222	Addressable detector base, flat	S54319-F1-A1	0.025
FDB221-AA	Detector base, addressable incl. 1 micro terminal DBZ1190-AA	A5Q00012741	0.029
Accessories			
FDBZ291	Designation plate	A5Q00002621	0.002
DBZ1193A	Designation plate	BPZ:4864330001	0.076
FDBH291	Detector heating unit incl. micro terminal DBZ1190-AA	A5Q00004439	0.015
DBZ1190-AA	Micro terminal 0.28…0.5 mm^2	BPZ:4677080001	0.001
DBZ1190-AB	Connection terminal 0.5…2.5 mm^2	BPZ:4942340001	0.001
FDBZ293	Detector locking device (2 Allen keys, 100 set screws)	A5Q00005035	0.001
FDB241	Base adapter Sinteso (SIGMA/A+)	S54319-F13-A1	0.090
FDB251	Base adapter Sinteso (Interactive)	S54319-F28-A1	0.090
FDB281	Base adapter Sinteso (MS8/PMT)	A5Q00004929	0.123
FDB291	Base attachment	A5Q00001603	0.035
FDB293	Base attachment humid	A5Q00003945	0.320
FDB295	Base attachment wet	S54319-F21-A1	0.286
FDB299	Base adapter Sinteso (collective)	S54319-F14-A1	0.090
FDUD290	Removal tool for FDUD290	S54370-S13-A1	0.100
DBZ1194	Protective cage	BPZ:4677110001	0.138
FDBZ294	EMC-protective cage	A5Q00023040	0.144
FDBZ295	Sealing element	S54319-F10-A1	0.062
FDZ291	Detector dust cap	A5Q00004814	0.003
–	Metal cable gland M20 x 1.5	A5Q00004478	0.036

Disposal

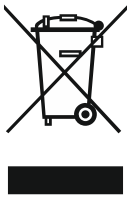

The device is considered an electronic device for disposal in accordance with the European Guidelines and may not be disposed of as domestic garbage.

- Dispose of the device through channels provided for this purpose.
- Comply with all local and currently applicable laws and regulations.

Technical data

Detector base	
Conductor cross-sections:	
• Connection terminals in the base	0.2…1.5 mm^2
• Connection terminals DBZ1190-AB	0.5…2.5 mm^2
• Micro terminals DBZ1190-AA	0.28…0.5 mm^2
Operating temperature, storage temperature, air humidity, protection category (IEC 60529)	You will find information in the following documents: • 007005 • 007850 • 008141
Color	~RAL 9010, pure white

Detector heating unit FDBH291	
Operating voltage (normal operation)	DC 20…30 V
Operating current	35…55 mA
Operating temperature	-30…+40 °C
Storage temperature	-30…+60 °C

Product documentation

Document ID	Title
007004	Technical manual Automatic fire detectors FDOOT221, FDOOT241-A3, FDOOT241-A4, FDOOT241-A5, FDOOT241-8, FDOOT241-9, FDOOT241-A9, FDO241, FDO221, FDT241, FDT221
007005	Data sheet Automatic fire detectors FDOOT241-9, FDOOT241-A9, FDO241, FDT241
007850	Data sheet Automatic fire detectors FDOOT221, FDO221, FDT221
008115	Installation Detector heating FDBH291
008116	Installation Base adapter FDB281
008141	Data sheet Multi-sensor fire detectors for step-wise modernization FDOOT241-A3, FDOOT241-A4, FDOOT241-A5, FDOOT241-A9, FDOOT241-8
008164	Equipment overview Sinteso™ Detector system FD20
008331	List of compatibility (for 'Sinteso™' product line)
009409	Data sheet Colored detectors, bases and base attachment FDO.., FDOOT…, FDT…, FDB…, FDCW241
A6V10208546	Installation Detector base FDB20x/FDB201-AA, FDB22x/FDB221-AA, Base attachment FDB291, Detector designation plate FDBZ291, Dummy detector FDX291
A6V10208550	Installation Base attachment humid FDB293
A6V10301448	Installation Base adapter FDB299
A6V10301452	Installation Base adapter FDB241
A6V10331076	Installation Base attachment wet FDB295, Detector designation plate DBZ1193A, Protective cage DBZ1194, EMC-protective cage FDBZ294
A6V10411361	Installation Base adapter FDB251

Dimensional drawings

FDB2x1 / FDB2x1-AA, FDB202 / FDB222

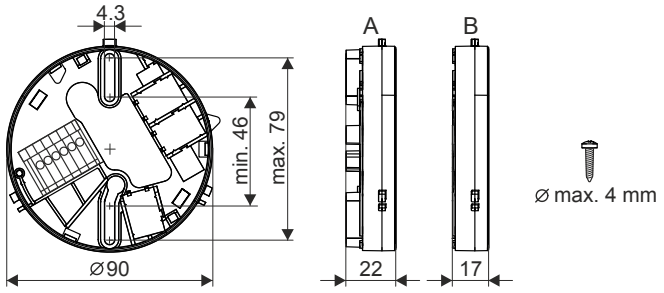

FDB241

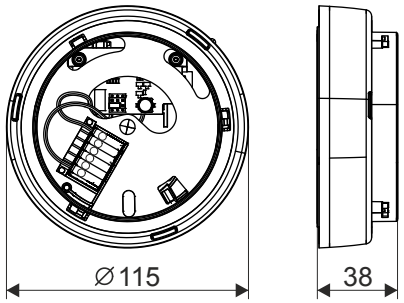

FDB251

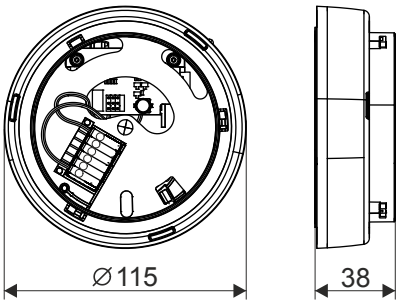

FDB281

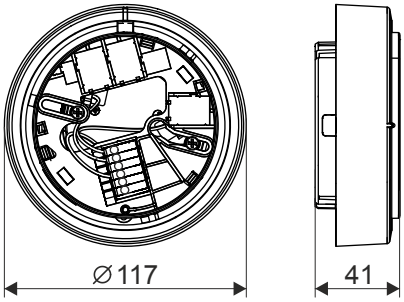

FDB291

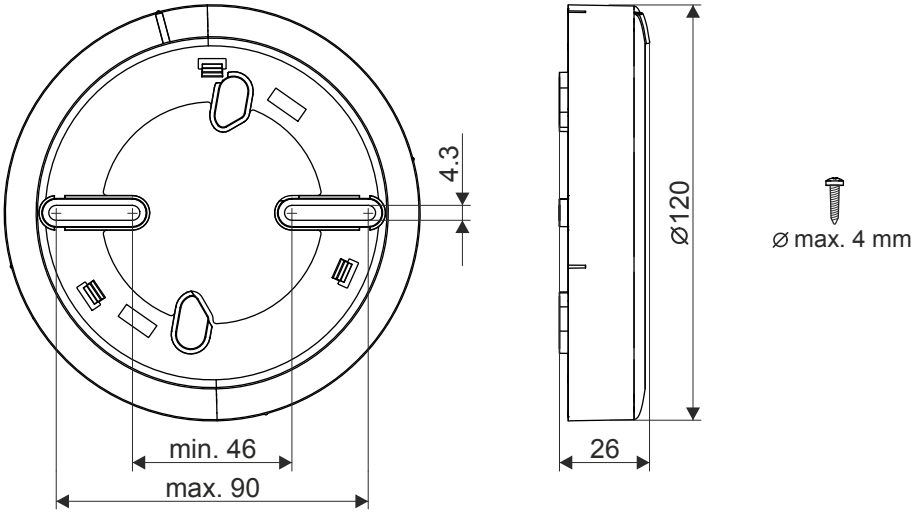

FDB293

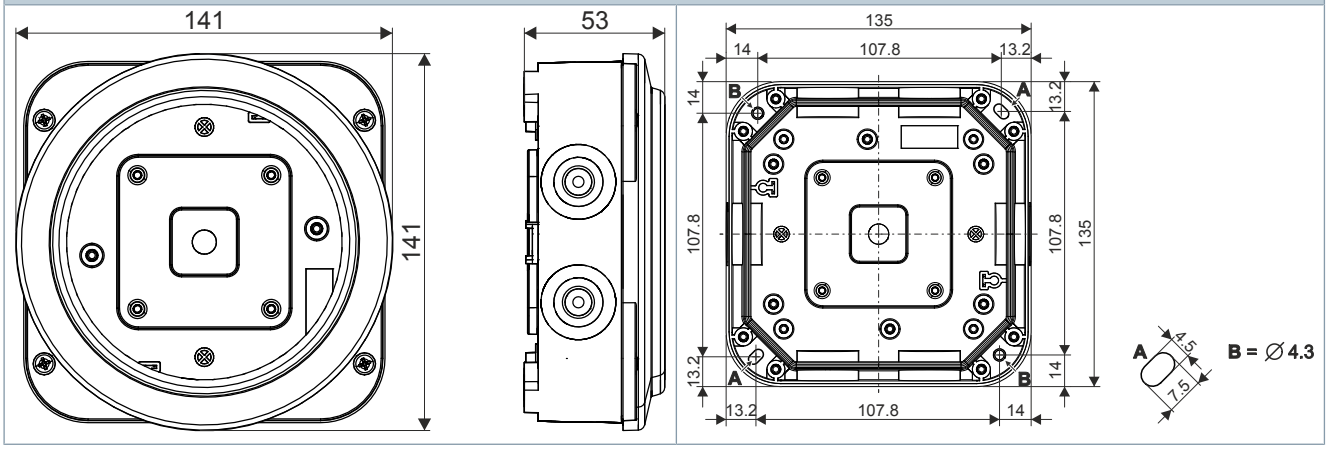

FDB295

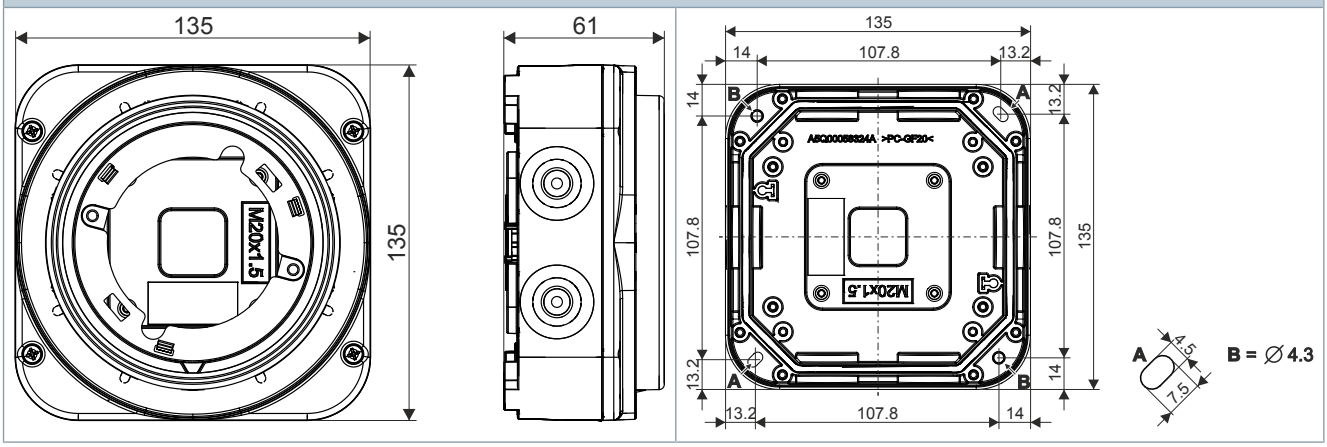

FDB299

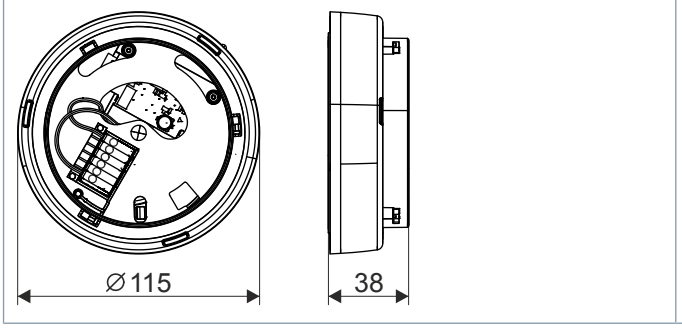

DBZ1194

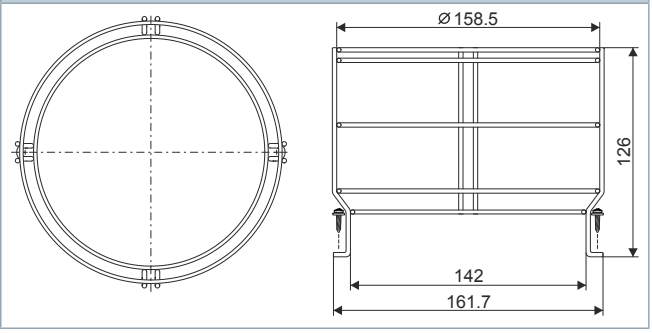

FDBZ294

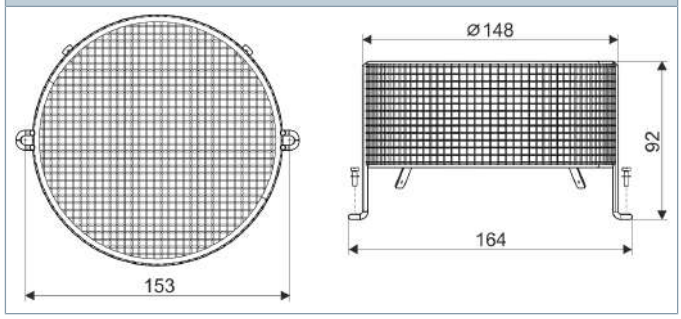

Issued by
Siemens Switzerland Ltd
Smart Infrastructure
Global Headquarters
Theilerstrasse 1a
CH-6300 Zug
+41 58 724 2424
www.siemens.com/buildingtechnologies

© Siemens Switzerland Ltd, 2007
Technical specifications and availability subject to change without notice.

Document ID	007775_r_en_--
Edition	2021-01-08