SIEMENS

Sinteso™/ Cerberus™ PRO/ Cerberus™ FIT

Input module, input/output module

FDCI221, FDCIO221

Input module and input/output module for the automatically addressed detector line FDnet/C-NET

- Input module FDCI221:
  - Monitorable contact input for reporting technical statuses or activating an alarm
- Input/output module FDCIO221:
  - Control output with potential-free relay contact for activation of alarming devices, fans, air conditioning systems, lift controls, etc.
  - Monitorable contact input for reporting technical statuses or activating an alarm
  - Use as a monitored output with a separate power supply, e.g., for operating acoustic signal transmitters
- LED indicator for input/output statuses and for fault, test, localization
- Power supply and communication via FDnet/C-NET (addressed individually)
- Address automatically issued during commissioning
- Two-wire installation for all cable types

Properties

Features

- Transparent housing, ensuring that indicators are easy to see
- Protected electronics
- Integrated line separator
- Chronological status monitoring
- Supply via FDnet/C-NET, auxiliary supply only required if the output is configured as monitored (FDCIO221)
- Microprocessor-controlled signal processing
- Different mounting options
- For dry areas
- In humid environments, use additional housing FDCH221

Eco-friendly

- Environmentally friendly processing
- Reusable materials
- Electronic parts and synthetic materials can be easily separated

Functions

FDCI221 **input module**

- Input for potential-free detector contact
- Monitoring the input line for open line and short-circuit with terminating resistors
- The input for status or alarm messages can be configured using the fire control panel.
- Status indicator by means of LED
- Fields of application:
  - To monitor a potential-free normally open or normally closed contact for reporting technical statuses (e.g., door or fan control) or alarm activation (e.g., sprinkler alarm)

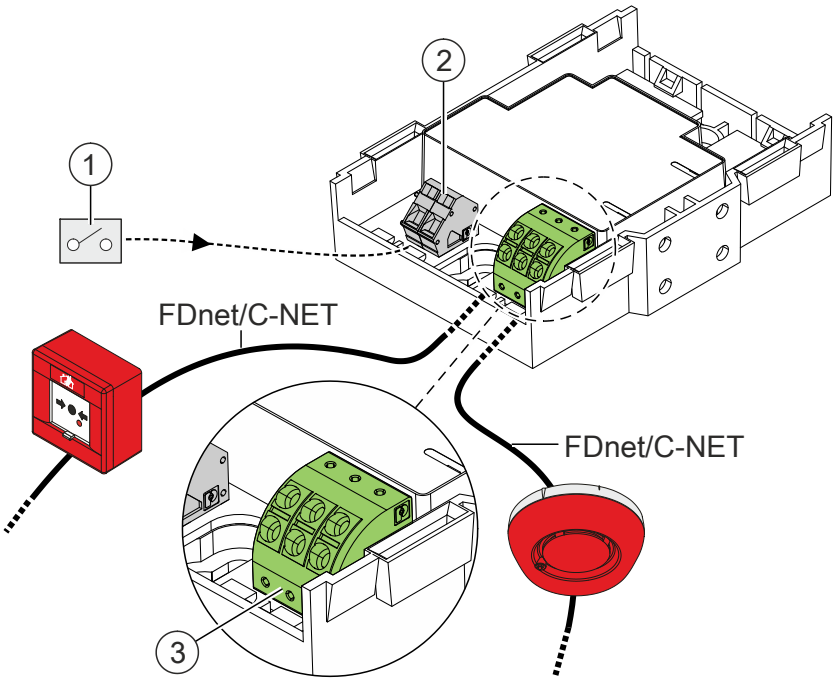

1	Potential-free detector contact	3	Connections for the detector line
2	Connections for the input		

FDCIO221 **input/output module**

- Input for potential-free detector contact
- Monitoring the input line for open line and short-circuit with terminating resistors
- The input for status or alarm messages can be configured using the fire control panel.
- Output which can be configured via jumper:
  - Not monitorable: Potential-free relay contact (AC 22 V, 2 A or DC 30 V, 2 A)
  - Monitorable: Relay contact (DC 30 V, 2 A)
- Status indicator by means of LED
- Fields of application:
  - To monitor a potential-free normally open or normally closed contact for reporting technical statuses (e.g., fan control) or alarm activation (e.g., sprinkler alarm)
  - For decentralized activation of alarming devices, fans, air conditioning systems, lift controls, etc.

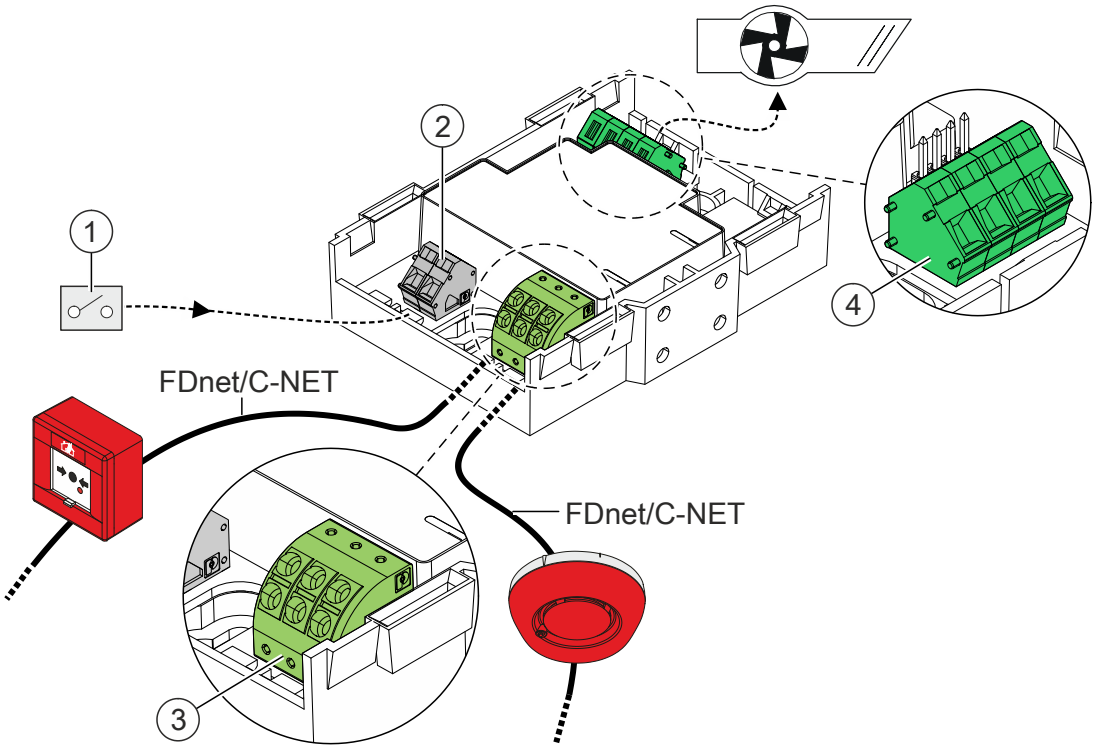

1	Potential-free detector contact	3	Connections for the detector line
2	Connections for the input	4	Connections for the output

Type Overview

Type	Designation	Order number	Weight [kg]
FDCI221	Input module incl. 2 resistors, 2 mounting feet	S54312-F1-A1	0.060
FDCIO221	Input/output module incl. 2 resistors, 2 mounting feet	S54312-F2-A1	0.066

Accessories for input module FDCI221, input/output module FDCIO221

Type	Designation	Order number	Weight [kg]
FDCH221	Housing with cover, seal, and screws	S54312-F3-A1	0.282
–	Metal cable gland M20 x 1.5	A5Q00004478	0.036
–	M20 metal counter nut	A5Q00004479	0.006
DBZ1190-AB	0.5…2.5 mm^2 (3-pin) connection terminal	BPZ:4942340001	0.001

Replacement material for input module FDCI221, input/output module FDCIO221

Type	Designation	Order number	Weight [kg]
FDCM291	Mounting foot	A5Q00003855	0.001

Product documentation

Document ID	Name
008164	Equipment overview Sinteso™ Detector system FD20
008331	List of compatibility (for 'Sinteso™' product line)
A6V10229261	List of compatibility (for 'Cerberus™ PRO' product line)
A6V10882301	List of compatibility (for 'FC360' product line)
A6V10211122	Technical Manual Input module FDCI221, input/output module FDCIO221
A6V10212086	Installation Input module FDCI221, Input/Output module FDCIO221, Housing FDCH221

Related documents such as the environmental declarations, CE declarations, etc., can be downloaded from the following Internet address:

https://siemens.com/bt/download

Notes

Mounting

Mounting options

- Directly on the mounting surface
- Series mounting on a U-rail TS35
- Surface-mounted or recess-mounted cable entry
- In housing FDCH221 (accessory) with cover, seal, and screws for wet areas

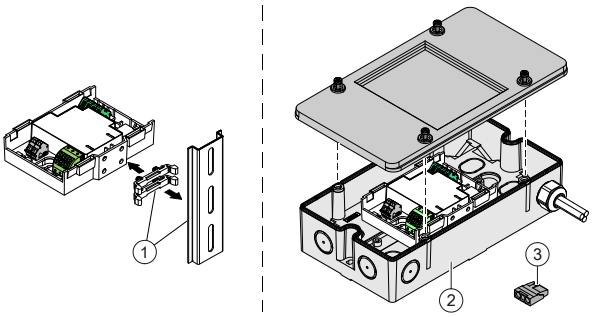

1 Series mounting using mounting feet supplied, on U-rail TS35

2 Mounting in housing FDCH221 (accessory)

3 Use auxiliary terminals DBZ1190-AB for shielded cables

Disposal

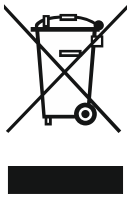

The device is considered an electronic device for disposal in accordance with European Directive and may not be disposed of as domestic waste.

- Use only designated channels for disposing the devices.
- Comply with all local and currently applicable laws and regulations.

Technical data

	FDCI221	FDCIO221
Operating voltage	DC 12…33 V	
Operating current (quiescent)	Max. 0.3 mA	Max. 0.4 mA
Relay output (ohmic)	-	AC 22 V, 2 A, max. 44 VA DC 30 V, 2 A, max. 60 W
Line resistance (input)	Max. 20 Ω	
Operating temperature	-25…+70°C	
Storage temperature	-30…+75°C	
Air humidity, non-condensing	≤95 % rel.	
Communication protocol	FDnet/C-NET	
Connection terminals	0.2…2.5 mm²	
Color ● Housing ● Cover ● Housing FDCH221	 ~RAL 9010, pure white Transparent matt ~RAL 9010, pure white	
Protection category (IEC 60529) ● When mounted on a U-rail in a fire control panel ● With housing FDCH221	 IP30 IP65	
Standards	EN 54-17, EN 54-18	
Approvals ● VdS ● LPCB ● FM	 G209066 531h/01 3038448	 G209067 531h/02 3038448
● DNV GL (marine)	MEDB00003UU	
System compatibility ● FDnet ● C-NET	 FS20 FS720, FC360	

Dimensional drawings

Input module FDCI221

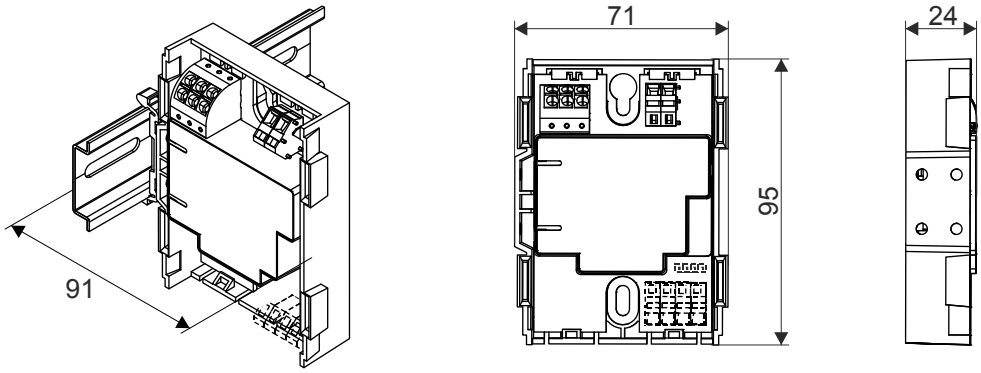

Input/output module FDCIO221

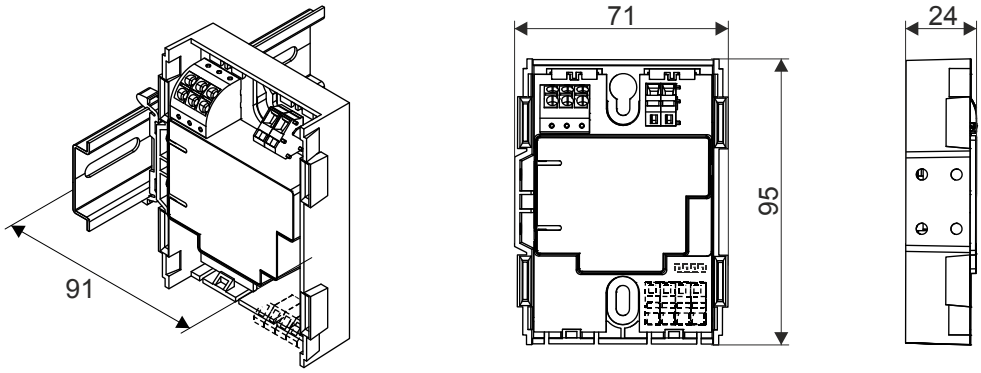

Housing FDCH221

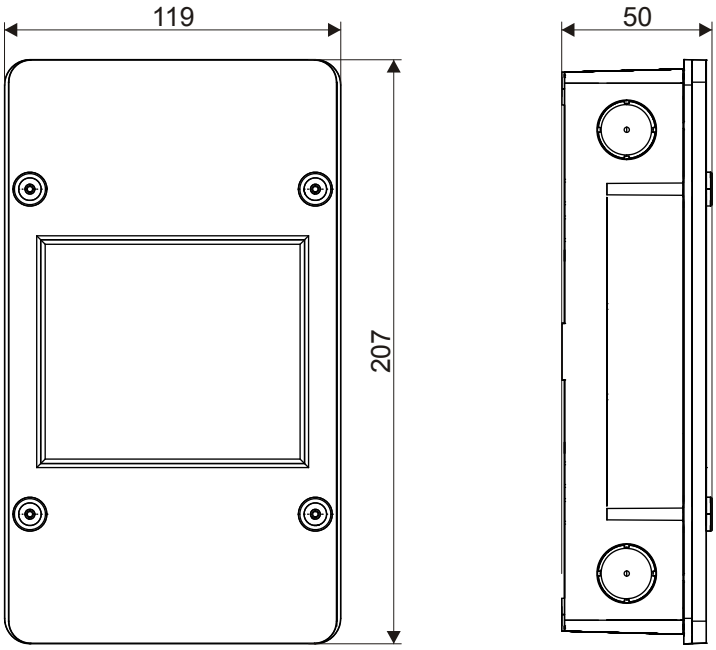

Issued by
Siemens Switzerland Ltd
Smart Infrastructure
Global Headquarters
Theilerstrasse 1a
CH-6300 Zug
+41 58 724 2424
www.siemens.com/buildingtechnologies

© Siemens Switzerland Ltd, 2009
Technical specifications and availability subject to change without notice.

Document ID A6V10202196_m_en_--
Edition 2023-02-23