SIEMENS

Sinteso™/ Cerberus™ PRO/ Cerberus™ FIT

Linear smoke detector

FDL242

Addressable linear smoke detector for the FDnet/C-NET detector line.

- Monitoring distance: 0…120 m with prism kit for long range
- Extensive range of accessories available
- Can be installed by one person
- No special tools are required
- Automatic compensation for soiling
- Laser-assisted reflector alignment followed by automatic adjustment
- Automatic reflector alignment for areas with high ambient lighting
- Continuous self-alignment during operation
- Parameters are set on Siemens fire control panel

Properties

- High immunity to extraneous light irradiation
- Automatic compensation in the event of shifts in alignment caused by building movements
- Compensation for soiling in the event of gradual soiling on optical surfaces
- Easy to clean surface
- Integrated control panel with direction keys to facilitate mounting
- LEDs for easy status detection
- Integrated line separator
- Dynamic ray phase control facilitates multi-detector arrangement:
  - Detectors are installed opposite one another with the reflectors in the center.

Use

- Buildings with historically valuable ceilings
- Atriums, detection on multiple levels
- Large rooms and high halls
- Churches
- Long corridors, cable and energy ducts with a room height of more than 3 m
- Aircraft hangars
- Saw-tooth roofs, where point detectors must be suspended lower

Functions

The addressable linear smoke detector FDL242 is used to detect smoke. It is operated via an FDnet/C-NET detector line.

The scope of delivery includes the smoke detector, the base unit, and one single reflector.

The detector sends an infrared ray in the non-visible spectrum to the reflector, which sends the ray back to the detector. If smoke gets into the measuring section under supervision, the infrared ray is attenuated. If the signal reaches specific measured values, the detector transmits the corresponding danger level to the control panel.

Available parameter sets

No.	Designation	Alarm for n % attenuation	Response value % (EN 54-12)
01	Standard with interruption of beam = error	58	35 (1.87 dB)
02	Standard with interruption of beam = alarm	58	35 (1.87 dB)
03	Sensitive with interruption of beam = error	50	29 (1.49 dB)
04	Sensitive with interruption of beam = alarm	50	29 (1.49 dB)
05	Very sensitive with interruption of beam = error	44	25 (1.25 dB)
06	Very sensitive with interruption of beam = alarm	44	25 (1.25 dB)

All parameter sets are approved to EN 54-12.

'Response value %' = attenuation of the beam by passing once through the detection distance. For instance 35 % on the dB scale: -10×log(1-0.35)

The following is applicable for installations to VdS:

Do not use the linear smoke detector FDL242 in systems and components that are designed for controlling and triggering extinguishing systems.

Type overview

Type	Designation	Order number	Weight [kg]
FDL242	Linear smoke detector	S54331-F10-A1	0.70
Accessories			
FDLRL242	Prism kit (long distance)	S54331-S10-A1	0.22
FDLH242	Detector heating unit	S54331-B20-A1	0.60
FDLZ242	Protective cage	S54331-B24-A1	1.00
FDLMA242	Mounting joint	S54331-B30-A1	0.25
FDLRA242-W	Holder (wall, white)	S54331-B25-A1	0.56
FDLRA242-B	Holder (wall, black)	S54331-B25-A2	0.56
FDLRSM242	Alignment device (short distance)	S54331-B26-A1	0.43
FDLRLM242	Alignment device (long distance)	S54331-B27-A1	1.10
FDLRSA242	Prism plate (short distance)	S54331-B22-A1	0.12
FDLRLA242	Prism plate (long distance)	S54331-B23-A1	0.46
FDLRH242-W	Prism heating unit (white)	S54331-B28-A1	1.00
FDLRH242-B	Prism heating unit (black)	S54331-B28-A2	1.00
FDLU242	Commissioning kit	S54331-S11-A1	1.21
FDLR242	Prism	S54331-B21-A1	0.06

Product documentation

Document ID	Title
A6V13478084	Technical manual Linear smoke detector FDL242

Related documents such as the environmental declarations, declarations of conformity, etc., can be downloaded from the following Internet address:

www.siemens.com/bt/download

Notes

Disposal

	This symbol or any other national label indicate that the product, its packaging, and, where applicable, any batteries may not be disposed of as domestic waste. Delete all personal data and dispose of the item(s) at separate collection and recycling facilities in accordance with local and national legislation. For additional details, refer to Siemens information on disposal.

Technical data

Electrical specifications

Operating voltage	DC 12…33 V
Operating current	1.5…3.7 mA
Minimum voltage for alignment	DC 20 V
Current during alignment	7.2…11.3 mA
Communication	FDnet/C-NET
System compatibility ● FDnet ● C-NET	 FS20 FS720, FC360

Short-circuit isolator according to EN 54-17	
Sustained current	Max. 1.5 A
Switching current	Max. 2 A
Leakage current	Max. 1.5 mA
Serial impedance	Max. 0.4 Ω

Cable connection

Cable type	Two-conductor cable
Conductor cross section	0.2…1.5 mm^2
3 break-out points	For M20 cable gland, ½" or ¾"
4 drill holes	For cable glands up to Ø 21 mm

Testing

Alarm test	Use the commissioning unit (accessory) for the optical alarm test.

Ambient conditions

Operating temperature	-20…+55 °C
Storage temperature	-40…+85 °C
Air humidity	93 % (no moisture condensation)
Protection category	IP53
Flammability limit, housing	UL94 V-0 polycarbonate
Housing color	~ RAL 9016 traffic white

Optical specifications

Distance between detector and prism	5…50 m, with single prism (included in scope of delivery)
	50…120 m, with FDLRL242 prism kit (long distance)
Optical wavelength	Smoke detection: 850 nm, infrared (invisible)
	Alignment with laser: 650 nm, class 3R <5 mW (visible)
Fault message in the event of rapid signal attenuation (Δ ≤2 s)	≥98 %
Maximum angular alignment detector, reflector	±4.5° (±70° with alignment device)
Maximum alignment error detector	±0.5°
Maximum alignment error reflector	±5°

Standards, approvals

Standards	EN 54-12, EN 54-17
Approvals ● VdS ● NF	 G208017 LF 015 A0

Dimensional drawings

FDL242

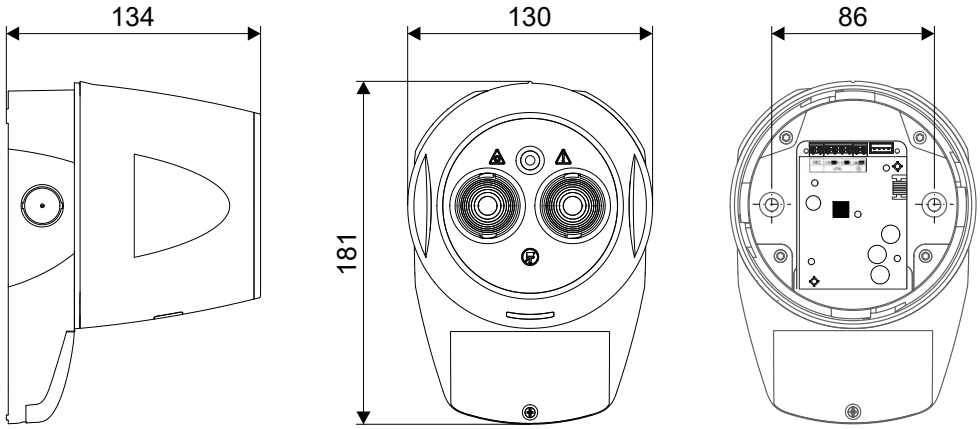

Accessories

FDLRL242 prism kit (long distance)

- Three additional prisms for the detection range up to 120 m

FDLH242 detector heating unit

- Operating voltage: 12…24 V (AC or DC)
- Operating current (quiescent): 832 mA
- Resistance: 57 Ω

FDLMA242 Mounting linkage

- For flexible alignment of the FDL242

FDLZ242 protective cage	
	● To protect the FDL242 against mechanical effects

FDLRA242-W holder (wall, white)	
	● Wall holder, pre-drilled ● Holds 1 prism or prism kit (prisms not included in scope of delivery)

FDLRA242-B holder (wall, black)	
	● Wall holder, pre-drilled ● Holds 1 prism or prism kit (prisms not included in scope of delivery)

FDLRSM242 alignment device (short distance)	
	● Prism plate and alignment bracket for 1 prism (not included in scope of delivery) ● Supports 360° rotation and 160° alignment

FDLRLM242 alignment device (long distance)	
	● Prism plate and alignment bracket for 4 prisms (not included in scope of delivery) ● Supports 360° rotation and 160° alignment

FDLRSA242 prism plate (short distance)	
	● Prism plate for 1 prism

FDLRLA242 prism plate (long distance)	
	● Prism plate for 4 prisms

FDLRH242-W prism heating unit (white)	
	● Prism heating for 1 prism or 4 prisms ● Operating voltage: DC 24 V ● Operating current: 800 mA

FDLRH242-B prism heating unit (black)	
	● Prism heating for 1 prism or 4 prisms ● Operating voltage: DC 24 V ● Operating current: 800 mA

FDLU242 commissioning kit	
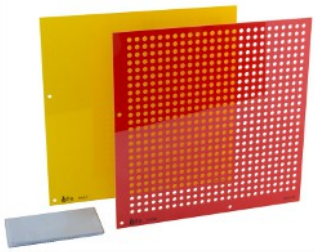	● Commissioning unit containing: ● 1 plate for full opacity for the purpose of simulating errors ● 1 plate for partial opacity for the purpose of simulating a fire

FDLR242 prism	

Issued by
Siemens Switzerland Ltd
Smart Infrastructure
Global Headquarters
Theilerstrasse 1a
CH-6300 Zug
+41 58 724 2424
www.siemens.com/buildingtechnologies

© Siemens 2023
Technical specifications and availability subject to change without notice.

Document ID A6V13457247_en--_e
Edition 2024-11-08