SIEMENS

Sinteso™ Cerberus™ PRO

Manual call point

FDM221, FDM223, FDM224

Manual call point addressed (FDnet/C-NET)

- Manual call points for addressed Sinteso FS20 and Cerberus PRO FS720 fire detection systems
- Manual call point FDM221 with direct activation: type 'A' according to EN 54-11
- Manual call point FDM223 with indirect activation: type 'B' according to EN 54-11
- Manual call point FDM224 with direct activation: type 'A' according to EN 54-11
- Two-wire installation for all cable types
- Communication via FDnet/C-NET (addressed individually)

Properties

Features

- Integrated line separator: The defective part on the detector line is located by the fire control panel and isolated between two FDnet/C-NET devices.
- Built-in alarm indicator (LED)
- Protected electronics
- Two-color LED for alarm and test

Eco-friendly

- Environmentally friendly processing
- Reusable materials
- Electronic parts and synthetic materials can be easily separated

Functions

Manual call point FDM221

- Direct alarm activation by pushing in the glass insert
- Manual call point reset by replacing the glass insert
- Protective cover FDMC291 (accessory) protects the manual call point against the glass being broken and the alarm activated accidentally.
- Fields of application:
  - For the immediate manual activation of an alarm
  - For use indoors
  - For surface-mounted and recess-mounted cable entries in easily accessible locations

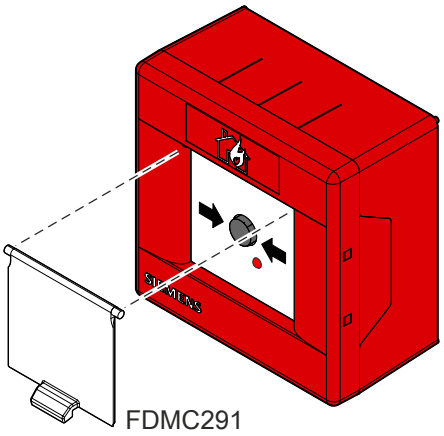

Manual call point FDM223

- Indirect alarm activation by pushing in the glass insert and pressing the alarm button
- Open the door of the detector with the key to replace the glass insert. Reset the alarm button before closing the door.
- Protective cover DMZ1197-AC (accessory) protects the manual call point against the glass being broken and the alarm activated accidentally.
- Seal DMZ1197-AD (accessories) protects the manual call point in wet areas.
- Fields of application:
  - For the immediate manual activation of an alarm
  - For indoor and outdoor application, also suitable for humid, wet, and dusty environments
  - For surface-mounted and recess-mounted cable entries in easily accessible locations

Manual call point FDM224

- Direct alarm activation by pushing in the glass insert

- Open the door of the detector with the key to replace the glass insert. The alarm button is reset when the door is closed.
- Fields of application:
  - For the immediate manual activation of an alarm
  - For indoor and outdoor application, also suitable for humid, wet, and dusty environments
  - For surface-mounted and recess-mounted cable entries in easily accessible locations

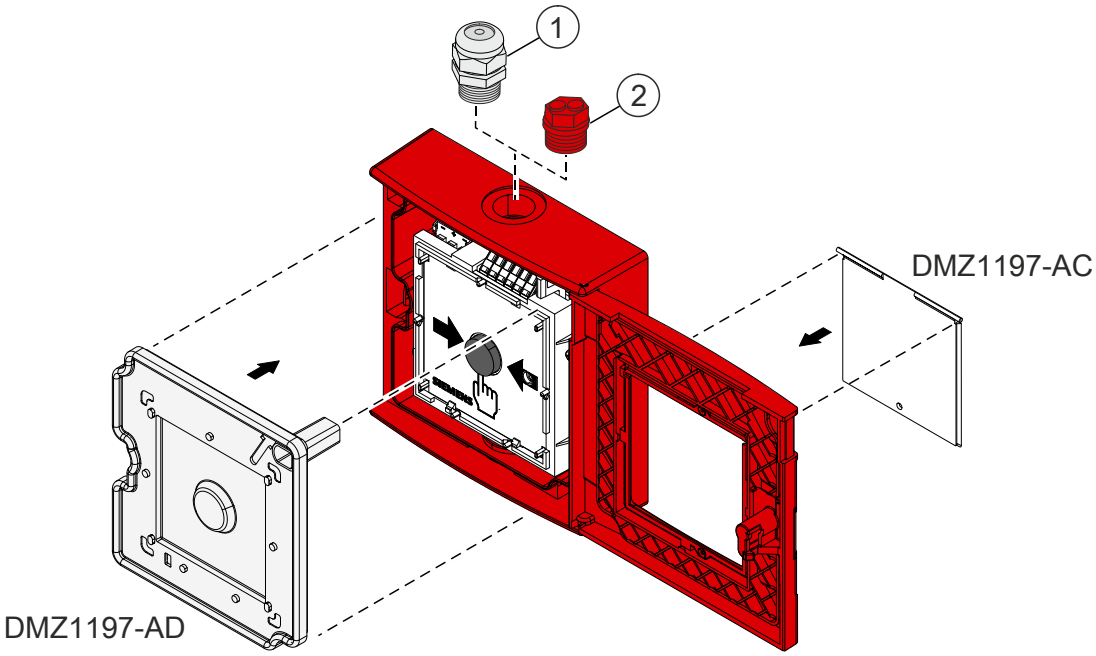

1 Metal cable gland (accessories)
2 Cable gripper

Type Overview

Manual call point FDM221

Type	Designation	Order number	Weight [kg]
FDMH291-R	Red housing with key	A5Q00002217	0.099
FDMH291-Y	Yellow housing with key	A5Q00004979	0.099
FDMH291-B	Blue housing with key	A5Q00004980	0.099
FDMH291-G	Green housing with key	A5Q00004981	0.099
FDME221	Switching unit	A5Q00002451	0.061

Accessories for manual call point FDM221

Type	Designation	Order number	Weight [kg]
FDMC291	Protective cover	A5Q00001644	0.006

Spare parts for manual call point FDM221

Type	Designation	Order number	Weight [kg]
FDMG291	Glass insert	A5Q00002122	0.005
FDMK291	Key	A5Q00001643	0.035

Manual call points FDM223, complete

Type	Designation	Order number	Weight [kg]
FDM223	Red housing, glass, key, switching unit, 2 cable grippers (2-hole), 2 standard signs with building and fire brigade/fire detector, red	A5Q00008098	0.296

Manual call point FDM223/FDM224

Type	Designation	Order number	Weight [kg]
FDMH293-R	Red housing with glass and key	A5Q00004023	0.252
FDMH297-R	Red housing with glass and key	S54311-B7-A1	0.250
FDMH293-Y	Yellow housing with glass and key	A5Q00004908	0.252
FDMH293-B	Blue housing with glass and key	A5Q00004909	0.252
FDMH293-G	Green housing with glass and key	A5Q00004911	0.252
FDMH293-O	Orange housing with glass and key	S54311-F2-A1	0.252
FDME223	Switching unit for FDM223	A5Q00003087	0.071
FDME224	Switching unit for FDM224	A5Q00009392	0.067

Accessories for manual call point FDM223/FDM224

Type	Designation	Order number	Weight [kg]
DMZ1197-AC	Protective cover	BPZ:5223550001	0.012
DMZ1197-AD	Sealing for wet areas	BPZ:5470680001	0.022

Spare parts for manual call point FDM223/FDM224

Type	Designation	Order number	Weight [kg]
DMZ1196-AC	Neutral glass insert	BPZ:4942050001	0.011
DMZ1195	Spare key	BPZ:4851910001	0.001
FDML223	MCP label (UV-resistant)	S54311-B11-A1	0.001

Product documentation

Document ID	Name
008164	Equipment overview Sinteso™ Detector system FD20
008331	List of compatibility (for 'Sinteso™' product line)
A6V10229261	List of compatibility (for 'Cerberus™ PRO' product line)
007002	Technical manual Manual call points FDM223, FDM224, FDM223H, FDM224H
009757	Technical manual Manual call points FDM221, FDM225, FDM226
007905	Installation Housing for manual call point FDMH293-x, FDMH297-R, Switching unit FDME223, FDME224
007904	Installation Housing FDMH291, Call point unit FDME221, MTE320C, DMA1101, DMA1131, DMA1151

Related documents such as the environmental declarations, CE declarations, etc., can be downloaded from the following Internet address:

https://siemens.com/bt/download

Notes

Mounting

Mounting options

- Recess-mounted cable entry:
  - For recess-mounted cable entry, break open the openings in the back box.
- Surface-mounted cable entry:
  - FDM221: Drill a hole in the top or bottom of the detector housing (where marked). Use max. cable glands M20.
  - FDM223/224: Use the opening at the top or bottom for cable glands or cable grippers M20.
- The switching unit can be used immediately after the feed line has been connected; this is an advantage when using the line tester FDUL221 to test lines.

Disposal

The device is considered an electronic device for disposal in accordance with the European Guidelines and may not be disposed of as domestic garbage.

- Dispose of the device through channels provided for this purpose.
- Comply with all local and currently applicable laws and regulations.

Technical data

	FDM221	FDM223/FDM224	
Operating voltage	DC 12…33 V	DC 12…33 V	
Operating current (quiescent)	200 µA	200 µA	
Ext. alarm indicator (AI)	-	Max. 2	
Operating temperature	-25…+70°C	-25…+70°C	
Storage temperature	-30…+75°C	-30…+75°C	
Air humidity (no moisture condensation)	≤95 % rel.	≤95 % rel.	
Communication protocol	FDnet/C-NET	FDnet/C-NET	
Conductor cross section	0.28…1.5 mm²	0.28…1.5 mm²	
Color	~RAL 3000 flame red	~RAL 3000 flame red ~RAL 5005 signal blue ~RAL 1023 traffic yellow ~RAL 6024 traffic green	
Protection category (IEC 60529) ● With seal DMZ1197-AD	IP44	IP41 IP64	
Standards	EN 54-11, EN 54-17	EN 54-11, EN 54-17	
Approvals ● VdS ● LPCB ● DNV GL (marine)	**FDM221:** G203059 531k/07 MEDB00003UM	**FDM223:** G204002 531k/08 -	**FDM224:** G206123 531k/10 MEDB00003 UM
System compatibility ● FDnet ● C-NET	FS20, AlgoRex, SIGMASYS FS720	FS20, AlgoRex, SIGMASYS FS720	

Dimensional drawings

Manual call point FDM221

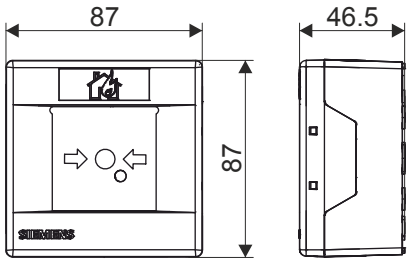

Manual call point FDM223, FDM224 with housing FDMH293-x

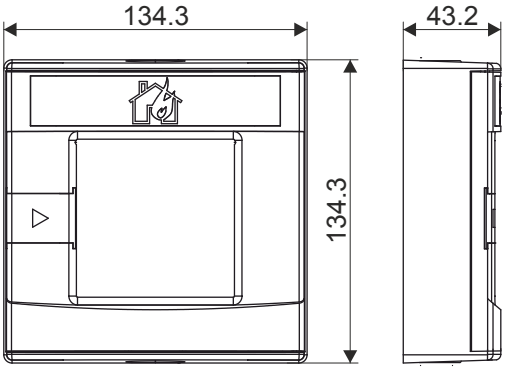

Manual call point FDM223, FDM224 with housing FDMH297-R

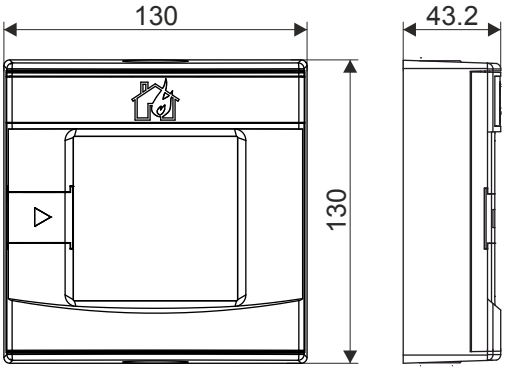

Issued by
Siemens Switzerland Ltd
Smart Infrastructure
Global Headquarters
Theilerstrasse 1a
CH-6300 Zug
+41 58 724 2424
www.siemens.com/buildingtechnologies

© Siemens Switzerland Ltd, 2007
Technical specifications and availability subject to change without notice.

Document ID	007001_v_en_--
Edition	2020-08-24