SIEMENS

Sinteso™/ Cerberus™ PRO

Sounder beacon (voice)

FDS224-x, FDS225-x, FDS226-xx, FDS227-xx, FDS227-xx-C

Sounder beacon (voice) for wall mounting for use in the automatically addressable FDnet/C-NET

- Addressed (FDnet/C-NET)
- Meets the requirements of the EN 54-3 standard
- Supply and communication via FDnet/C-NET
- Max. 16 tones to choose from, 2 programmable events: 'Warning (ALERT)' and 'Evacuation (EVAC)'
- Adjustable sound levels up to max. 99 dBA
- Additional beacon for FDS226-xx, FDS227-xx, and FDS227-xx-C:
  - Meets the requirements of the EN 54-23 standard
  - Red or white LEDs with four adjustable luminous intensities
- Additional voice output for FDS225-x, FDS227-xx, and FDS227-xx-C:
  - 15 languages integrated in the device, additional languages can be ordered
  - Each voice message can be emitted in two languages
  - Max. seven available events
  - Customer-specific voice messages and/or tones can be ordered

Properties

- Devices and bases are available in two colors:
  - Red (~RAL 3000 flame red)
  - White (~RAL 9010, pure white)
- Integrated line separator
- The device automatically monitors its beacon and acoustic function.
- Tool-free connection to the detector line. Possible conductor cross-sections to 2.5 mm^2.
- Max. protection category achievable: IP65 for use with base deep FDB227-x and M20 x 1.5 metal cable gland with M20 x 1.5 counter nut.
- Synchronization of acoustic and beacon signals as well as voice messages (voice messages only for FDS225-x and FDS227-xx as well as FDS227-xx-C)
- By setting the appropriate tone, it can be used as a break bell in schools or plants.
- For FDS225-x, FDS227-xx, and FDS227-xx-C: Simple configuration of the voice messages with the configuration software for the respective fire detection system:
  - 'SintesoWorks' for the 'Sinteso' product line
  - 'Cerberus-Engineering-Tool' for the 'Cerberus PRO' product line
- Protected electronics and high-quality components
- Eco-friendly
  - Environmentally friendly processing
  - Reusable materials
  - Electronic parts and synthetic materials can be easily separated

Use

- Public buildings
- Office buildings
- Hotels
- Schools and kindergartens

Intended use

The devices FDS224-x, FDS225-x, FDS226-xx, FDS227-xx, and FDS227-xx-C are intended to be used as alarm devices on an FDnet/C-NET detector line in connection with a fire control panel FC20xx ('Sinteso' product line) or FC72x ('Cerberus PRO' product line).

Functions shared by all devices

The devices provide an alarm in an addressed fire detection system FS20/FS720. They activate an acoustic signal in the event of a fire alarm. Each device has 16 tones ex-factory.

All devices have their own device addresses and can be configured independently of each other.

Voice sounder
FDS225-R, FDS225-W

The devices activate an acoustic signal in the event of a fire alarm. In addition, the devices can emit prerecorded standard voice messages.

You will find more information on voice messages in the 'Standard voice messages' section of this data sheet.

Sounder beacon
FDS226-RW, FDS226-WW, FDS226-RR, FDS226-WR

In the event of a fire alarm, the devices activate both an acoustic and an optical alarm signal (with the LEDs flashing). The devices are available with red or white flashing LEDs.

Voice sounder beacon
FDS227-RW, FDS227-WW, FDS227-RR, FDS227-WR

In the event of a fire alarm, the devices activate both an acoustic and an optical alarm signal (with the LEDs flashing). The devices are available with red or white flashing LEDs.

In addition, the devices can emit prerecorded standard voice messages:

- 15 standard languages are integrated in the devices.
- Standard voice messages have been recorded for five events per language. The following events are available:
  - Evacuation Fire
  - Evacuation Emergency
  - Alert
  - Test
  - All clear
- The voice messages can be emitted in two consecutive languages.

You will find more information on voice messages in the 'Standard voice messages' section of this data sheet.

Voice sounder beacon
FDS227-RW-C, FDS227-WW-C, FDS227-RR-C, FDS227-WR-C

In terms of their functionality, these devices correspond to FDS227-xx.
Customer-specific configurations can be integrated ex-factory:

- Two more languages in addition to the 15 standard languages
- Two more tones in addition to the 16 tones
- Two more events in two languages in addition to the five events

You will find more information on the additional functions of the customer-specific devices in the 'Customer-specific languages, tones, and voice messages' section of this data sheet.

Standard voice messages

The devices include prerecorded standard voice messages for five events in 15 languages.

The standard voice messages are available in the following languages:

- English (en) [1]
- German (de)
- French (fr)
- Spanish (es)
- Italian (it)
- English (UK)
- Dutch (nl)
- Swedish (sv)
- Norwegian (no)
- Finnish (fi)
- Danish (da)
- Polish (pl)
- Portuguese (pt)
- Turkish (tr)
- Russian (ru)

[1] The abbreviations used comply with the ISO 639-1 standard.
Exception: 'English (UK)'

The following table lists examples of standard voice messages in some languages:

Language	Message M1 Evacuation Fire	Message M2 Evacuation Emergency	Message M3 Alert	Message M4 Test	Message M5 All clear
English	Attention please, this is a fire alarm! Please leave the building immediately by the marked available exits.	Attention please, this is an emergency. Please leave the building by the marked available exits.	Attention, an incident has been reported in the building, please await further instructions.	This is a test message, no action is required.	Attention please! All clear! The building alert has been resolved. All clear!
German	Achtung! Achtung! Dies ist ein Brandalarm! Bitte verlassen Sie umgehend das Gebäude über die gekennzeichneten Fluchtwege.	Achtung! Achtung! Dies ist eine Gefahrenmeldung! Bitte verlassen Sie umgehend das Gebäude über die gekennzeichneten Fluchtwege.	Achtung, im Gebäude ist eine Gefahrensituation gemeldet worden! Bitte warten Sie auf weitere Anweisungen.	Dies ist eine Testdurchsage! Bitte nicht beachten.	Achtung! Achtung! Die Alarmierung wird hiermit wieder aufgehoben.
French	Attention, attention! Ceci est une alarme incendie! Evacuez le bâtiment par les sorties de secours les plus proche!	Attention, attention! Pour des raisons de sécurité evacuez le bâtiment par les sorties de secours les plus proche!	Attention, attention! Un incident a été signalé dans le bâtiment. Veuillez attendre de nouvelles instructions!	Ceci est un message de tests. Veuillez s'il vous plaît ne pas en tenir compte.	Attention, attention! L'urgence dans le bâtiment est levée. Retour à la situation normale.
Spanish	¡Este es un aviso de alarma de incendio! Por favor abandone el edificio por la salida más cercana.	Atención por favor,esto es una emergencia. Por favor abandone el edificio por la salida más cercana.	Se ha reportado un incidente en el edificio, por favor espere instrucciones mas detalladas.	Este es un mensaje de prueba, no se requiere ninguna acción.	Atención por favor! Fin de la alerta. La alerta del edificio ha sido resuelta. Fin de la alerta!
Italian	Attenzione, questo è un allarme incendio! Evacuare l'edificio immediatamente attraverso l'uscita più vicina.	Attenzione, questa è un'emergenza. Evacuare l'edificio attraverso l'uscita più vicina.	Si è verificato un problema nell'edificio, si prega di attendere ulteriori informazioni.	Questo è un messaggio di prova, nessuna azione è necessaria.	Attenzione prego! Il problema riscontrato nell'edificio è stato risolto. Nessun pericolo!

You will find more information on the voice messages in the technical manual for the devices. See the 'Product documentation' section in this data sheet.

Customer-specific languages, tones, and voice messages

Additional languages and voice messages as well as more tones are available on request.

You will find more information on the voice messages and the ordering process for customer-specific devices in the technical manuals for the devices.

See section 'Product documentation [→ 6]' in the present data sheet.

Type Overview

Type [1]	Designation	Order number	Weight [kg]
FDS224-R	Sounder	S54364-F1-A1	0.154
FDS224-W	Sounder	S54364-F2-A1	0.154
FDS225-R	Voice sounder	S54364-F3-A1	0.154
FDS225-W	Voice sounder	S54364-F4-A1	0.154
FDS226-RR	Sounder beacon	S54364-F5-A1	0.172
FDS226-RW	Sounder beacon	S54364-F6-A1	0.172
FDS226-WR	Sounder beacon	S54364-F7-A1	0.172
FDS226-WW	Sounder beacon	S54364-F8-A1	0.172
FDS227-RR	Voice sounder beacon	S54364-F9-A1	0.172
FDS227-RW	Voice sounder beacon	S54364-F10-A1	0.172
FDS227-WR	Voice sounder beacon	S54364-F11-A1	0.172
FDS227-WW	Voice sounder beacon	S54364-F12-A1	0.172
FDS227-RR-C [2]	Voice sounder beacon	S54364-F9-A2	0.172
FDS227-RW-C [2]	Voice sounder beacon	S54364-F10-A2	0.172
FDS227-WR-C [2]	Voice sounder beacon	S54364-F11-A2	0.172
FDS227-WW-C [2]	Voice sounder beacon	S54364-F12-A2	0.172

1	FDS22x-	R	W	
			Color of the LED (R = red, W = white)	
		Color of the housing (R = red, W = white)		
2	C = customer-specific device			

Accessories

Type	Designation	Order number	Weight [kg]
FDB226-R [1]	Base (wall mounting)	S54364-B1-A1	0.045
FDB226-W [2]	Base (wall mounting)	S54364-B2-A1	0.045
FDB227-R [1]	Base deep (wall mounting)	S54364-B3-A1	0.073
FDB227-W [2]	Base deep (wall mounting)	S54364-B4-A1	0.073
–	Metal cable gland M20 x 1.5	A5Q00004478	0.036
–	M20 x 1.5 metal counter nut	A5Q00004479	0.006
FDBZ291	Designation plate	A5Q00002621	0.002
FDBZ293 [3]	Detector locking device	A5Q00005035	0.001
LP720 [3]	Detector locking device	S54319-F9-A1	0.001
DBZ1190-AA	Micro terminal 0.28…0.5 mm^2	BPZ:4677080001	0.001
DBZ1190-AB	Connection terminal 0.5…2.5 mm^2	BPZ:4942340001	0.001

[1] Color of base: red

[2] Color of base: white

[3] For device with FDB226-x and device with FDB227-x

Product documentation

Document ID	Title
008164	Equipment overview Sinteso™ Detector system FD20
008331	List of compatibility (for 'Sinteso™' product line)
009078	FS20 Fire detection system - Configuration
A6V10210424	FS720 Fire detection system - Configuration
A6V10229261	List of compatibility (for 'Cerberus™ PRO' product line)
A6V10725350	Technical Manual FDS224-x, FDS225-x, FDS226-xx, FDS227-xx, FDS227-xx-C

Related documents such as the environmental declarations, CE declarations, etc., can be downloaded from the following Internet address:
https://siemens.com/bt/download

Mounting

The devices are mounted into a base (wall mounting) FDB226 or a base deep (wall mounting) FDB227.

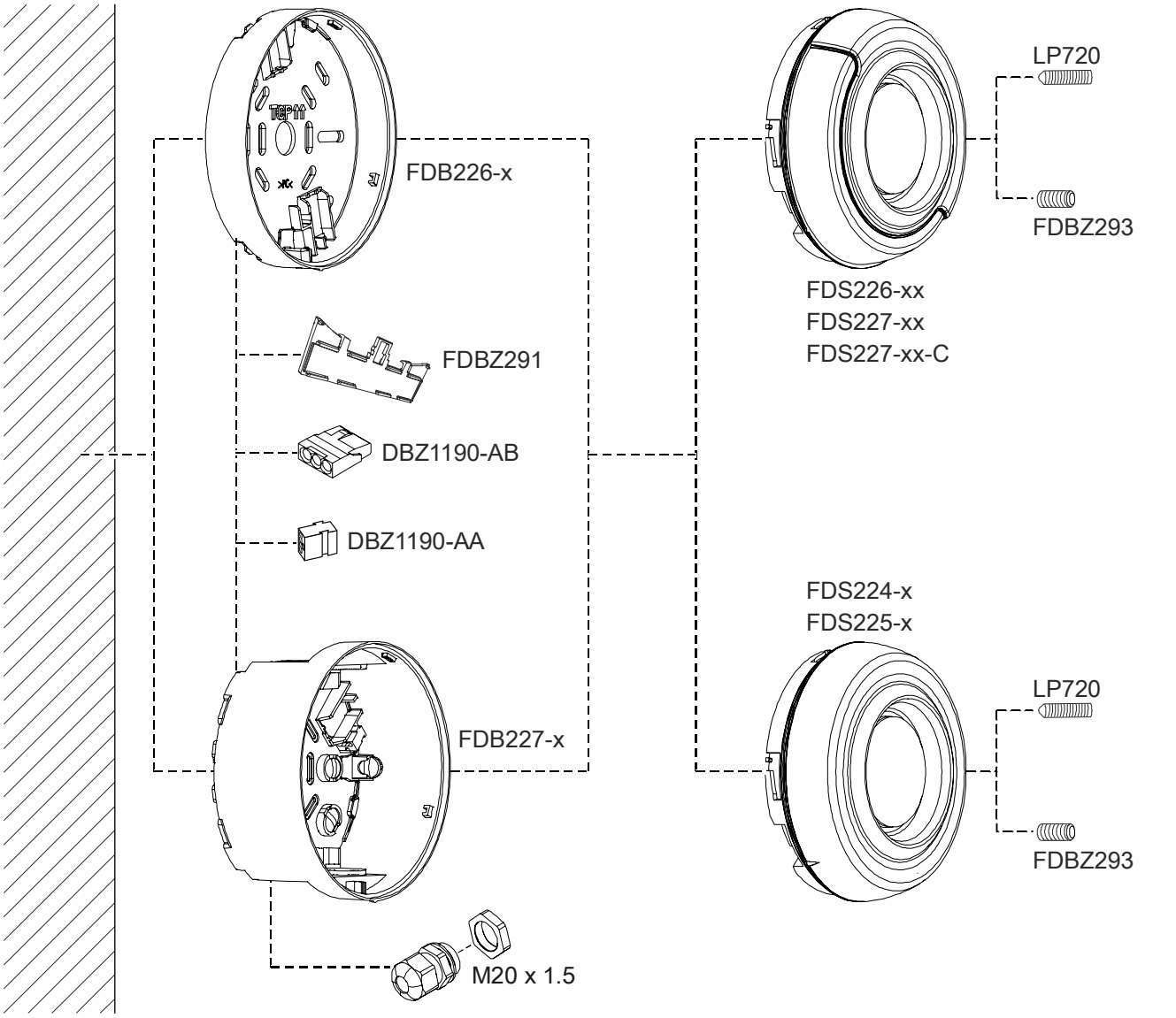

Devices and accessories

Installation

Simple connection of the devices to the FDnet/C-NET detector line:

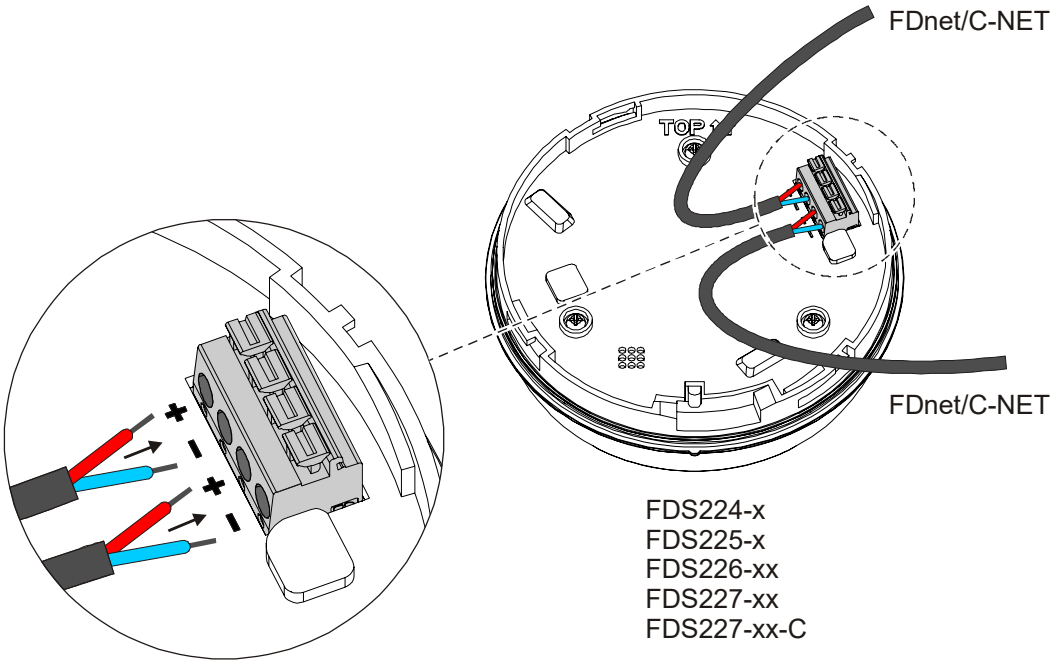

Disposal

	The device is considered an electronic device for disposal in accordance with the European Guidelines and may not be disposed of as domestic garbage. • Dispose of the device through channels provided for this purpose. • Comply with all local and currently applicable laws and regulations.

Technical data

Supply		
Operating voltage		• DC 12...33 V for FDS224-x, FDS225-x • DC 16...33 V for FDS226-xx, FDS227-xx, FDS227-xx-C
Operating current (quiescent)		• 250 µA for FDS224-x, FDS225-x • 400 µA for FDS226-xx, FDS227-xx, FDS227-xx-C
• Tone/voice activated [1]		Max. 4 mA (128 mW)
• Beacon activated [2]	LED white	High (W-3.2-10): 22 mA (352 mW)
		Medium (W-2.4-7.5): 13 mA (208 mW)
		Low (O-2-6.2): 10 mA (160 mW)
		Indicator: 3 mA (48 mW)
	LED red	High (W-2.8-8.8): 24 mA (384 mW)
		Medium (W-2.4-7.5): 17 mA (272 mW)
		Low (O-2-6.2): 13 mA (208 mW)
		Indicator: 3 mA (48 mW)
• Beacon and tone/voice activated [1] [2]	LED white	High (W-3.2-10): 25 mA (440 mW)
		Medium (W-2.4-7.5): 16 mA (296 mW)
		Low (O-2-6.2): 13 mA (248 mW)
		Indicator: 5 mA (160 mW)
	LED red	High (W-2.8-8.8): 27 mA (472 mW)
		Medium (W-2.4-7.5): 20 mA (360 mW)
		Low (O-2-6.2): 16 mA (296 mW)
		Indicator: 5 mA (160 mW)

[1] Max. sound level for tone and voice output is taken into account

[2] Only for FDS226-xx, FDS227-xx, FDS227-xx-C

Functional data		
Tones		• 16 tones (including school bell) • 2 alarm levels ('Warning' and 'Evacuation') • 3 sound levels (maximum / medium / minimum)
Voice messages		• 5 standard voice messages in 15 languages • Max. 7 events • 3 sound levels (maximum / medium / minimum) • Each voice message can be emitted in two languages
Sound level (alarm sound level)		FDS224-x, FDS226-x: 75…99 dBA
		FDS225-xx, FDS227-xx, FDS227-xx-C: 71…94 dBA
Luminous intensity [1] (according to EN 54-23)	LED white	High (W-3.2-10)
		Medium (W-2.4-7.5)
		Low (O-2-6.2) (wall mounting, cubic cover cap as for category W)
		Indicator: 0.4…5 cd [2]
	LED red	High (W-2.8-8.8)
		Medium (W-2.4-7.5)
		Low (O-2-6.2) (wall mounting, cubic cover cap as for category W)
		Indicator: 0.3…3 cd [2]
Luminous intensity levels [1]		4 levels (high/medium/low/indicator)
Communication protocol		FDnet/C-NET
System compatibility FDnet/C-NET		FS20/FS720
Color		~RAL9010 pure white or ~RAL3000 flame red

[1] Only for FDS226-xx, FDS227-xx, FDS227-xx-C

[2] Does not comply with EN 54-23

Line connections	
Conductor cross section	0.2...2.5 mm²

Ambient conditions and protection category	
Protection category (IEC 60529): • With base FDB226-x: • With base deep FDB227-x:	 • IP33C • IP65 (no LPCB approval)
Operating temperature	-25...+70 °C
Storage temperature	-30...+75 °C
Air humidity	≤95 % rel.

Standards, directives, and approvals		
Standards	EN 54-3 type B, EN 54-17 EN 54-23, type B	
Approvals: • VdS • LPCB	 FDS224-x FDS225-x FDS226-xW FDS227-xW FDS226-xR [3] FDS227-xR [3] 531p-(cl-1), 531v-(cl-1)	 G219001 G219002 G219003 G219004 G219003 G219004

[3] VdS approval according to EN 54-23 only for type A indoor application

Dimensional drawings

Device with base (wall mounting) FDB226-x

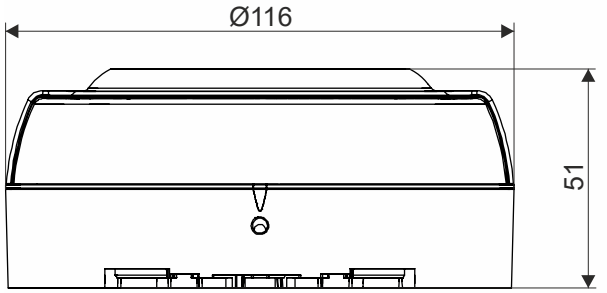

Device with base deep (wall mounting) FDB227-x

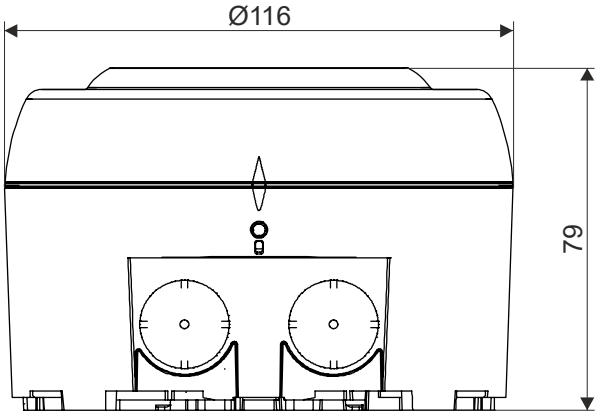

18 CE 2831	**FDS224**	Siemens Schweiz AG; Theilerstrasse 1a CH-6300 Zug Technical data: see doc. **A6V10725350**
FDS224 - Sounder incl. Short-circuit isolator		
305/2011/EU (CPR): EN 54-3 / EN 54-17 ; 2014/30/EU (EMC): EN 50130-4 / EN 61000-6-3 ; 2011/65/EU (RoHS): EN 50581		
The declared performance and conformity can be seen in the Declaration of Performance (DoP) and the EU Declaration of Conformity (DoC), which is obtainable via the Customer Support Center: Tel. +49 89 9221-8000 or https://siemens.com/bt/download		
DoP No.: DOP190211 ; DoC No.: CED-FDS224		

18 CE 2831	**FDS225**	Siemens Schweiz AG; Theilerstrasse 1a CH-6300 Zug Technical data: see doc. **A6V10725350**
FDS225 - Sounder incl. Short-circuit isolator		
305/2011/EU (CPR): EN 54-3 / EN 54-17 ; 2014/30/EU (EMC): EN 50130-4 / EN 61000-6-3 ; 2011/65/EU (RoHS): EN 50581		
The declared performance and conformity can be seen in the Declaration of Performance (DoP) and the EU Declaration of Conformity (DoC), which is obtainable via the Customer Support Center: Tel. +49 89 9221-8000 or https://siemens.com/bt/download		
DoP No.: DOP190212 ; DoC No.: CED-FDS225		

18 CE 2831	**FDS226**	Siemens Schweiz AG; Theilerstrasse 1a CH-6300 Zug Technical data: see doc. **A6V10725350**
FDS226 - Visual alarm device/sounder incl. Short-circuit isolator		
305/2011/EU (CPR): EN 54-3 / EN 54-17 / EN 54-23 ; 2014/30/EU (EMC): EN 50130-4 / EN 61000-6-3 ; 2011/65/EU (RoHS): EN 50581		
The declared performance and conformity can be seen in the Declaration of Performance (DoP) and the EU Declaration of Conformity (DoC), which is obtainable via the Customer Support Center: Tel. +49 89 9221-8000 or https://siemens.com/bt/download		
DoP No.: DOP190213 ; DoC No.: CED-FDS226		

18 CE 2831	**FDS227**	Siemens Schweiz AG; Theilerstrasse 1a CH-6300 Zug Technical data: see doc. **A6V10725350**
FDS227 - Visual alarm device/sounder incl. Short-circuit isolator		
305/2011/EU (CPR): EN 54-3 / EN 54-17 / EN 54-23 ; 2014/30/EU (EMC): EN 50130-4 / EN 61000-6-3 ; 2011/65/EU (RoHS): EN 50581		
The declared performance and conformity can be seen in the Declaration of Performance (DoP) and the EU Declaration of Conformity (DoC), which is obtainable via the Customer Support Center: Tel. +49 89 9221-8000 or https://siemens.com/bt/download		
DoP No.: DOP190214 ; DoC No.: CED-FDS227		

Issued by
Siemens Switzerland Ltd
Smart Infrastructure
Global Headquarters
Theilerstrasse 1a
CH-6300 Zug
Tel. +41 58 724 2424
www.siemens.com/buildingtechnologies

© Siemens Switzerland Ltd, 2018
Technical specifications and availability subject to change without notice.

Document ID A6V10725075_en--_d
Edition 2019-10-25