SIEMENS

Cerberus™ PRO / Cerberus™ FIT

Automatic fire detectors

OH720, OP720, HI720, HI722

For the automatically addressable detector bus C-NET

- The ideal fire detector for every application
- Signal processing with detection algorithms
- Address automatically issued during commissioning
- Communication via C-NET (addressed individually)

Properties

Features

- Resistant to environmental and interfering influences such as dust, fibers, insects, moisture, extreme temperatures, electromagnetic interference, corrosive vapors, vibration
- Shock resistant, protection against sabotage
- Protected electronics, high-quality components
- Integrated line separator: The defective part on the detector line is located by the fire control panel and isolated between two C-NET devices.
- Integrated alarm indicator (AI), located centrally, 360° visibility
- Up to 2 external alarm indicators type FDAI91/FDAI92/FDAI93 can be connected per detector
- Signal processing with detection algorithms
- Address automatically issued during commissioning
- Same detector base can be used for every detector type, for surface-mounted and recess-mounted supply lines

Eco-friendly

- Environmentally friendly processing
- Reusable materials
- Electronic parts and synthetic materials can be easily separated

Use

OH720 multi-sensor fire detector	
	Multi-sensor fire detector consisting of: ● Point detector ● Detector dust cap to protect the point detector during the construction phase **Function:** ● Functions according to the scattered light principle with one sensor, optical forward scattering ● Opto-electronic measuring chamber which obstructs disruptive extraneous light but provides excellent detection of smoke particles ● An additional heat sensor increases the point detector's immunity to deceptive phenomena ● Selectable detection behavior thanks to two parameter sets – Parameter set 1: 'Robust' – Parameter set 2: 'Sensitive' ● Immunity to false alarms **Use**: ● For detection of flaming fires of solid and liquid substances as well as of smoldering fires ● For reliable fire detection in an environment with deceptive phenomena

OP720 smoke detector	
	Smoke detector consisting of: ● Point detector ● Detector dust cap to protect the point detector during the construction phase **Function:** ● Functions according to the scattered light principle with one sensor, optical forward scattering ● Opto-electronic measuring chamber which obstructs disruptive extraneous light but provides excellent detection of smoke particles ● Selectable detection behavior thanks to two parameter sets – Parameter set 1: 'Standard' – Parameter set 2: 'Sensitive' **Use**: ● For detection of smoke-generating flaming fires and smoldering fires

HI720 heat detector (static and differential)	
	Heat detector consisting of: ● Point detector with one heat sensor ● Detector dust cap to protect the point detector during the construction phase **Function:** ● For high requirements ● Reliable response behavior for slow and rapid temperature rises, plus reliable response behavior for low temperatures ● Selectable detection behavior thanks to two parameter sets – Parameter set 1: 'A2S' – Parameter set 2: 'A2R' **Use**: ● Suitable for rooms with a fluctuating operating temperature ● Where significant dust or dirt deposits or high moisture levels could impair the operation of standard detectors

HI722 heat detector (static only)	
	Heat detector consisting of: ● Point detector with one heat sensor ● Detector dust cap to protect the point detector during the construction phase **Function:** ● Measures the operating temperature. The point detector sends a danger signal to the fire control panel if the maximum temperature is exceeded ● Parameter set: 'A2S' **Use**: ● Suitable for rooms with an operating temperature that fluctuates greatly for a short period of time ● Where significant dust or dirt deposits and temperature fluctuations could impair the operation of standard detectors

Intended use

The automatic fire detectors OH720, OP720, HI720, and HI722 may only be used on a C-NET detector line in a FS720 or FC360 fire detection system.

Type Overview

Type	Designation	Order number	Weight [kg]
OH720	Multi-sensor fire detector ● Pure white, RAL 9010 ● Jet black, RAL 9005	 S54310-F2-A1 S54310-F2-A2	0.144
OP720	Smoke detector ● Pure white, RAL 9010 ● Jet black, RAL 9005	 S54310-F1-A1 S54310-F1-A2	0.094
HI720	Heat detector (static and differential)	S54310-F4-A1	0.130
HI722	Heat detector (static only)	S54310-F3-A1	0.130
DB721	Detector base with loop contact ● Pure white, RAL 9010 ● Jet black, RAL 9005	 S54319-F11-A1 S54319-F11-A2	0.052
DB722	Detector base	S54319-F19-A1	0.052
DBS720	Sounder base	S54319-F5-A1	0.090
Accessories			
FDBZ291	Designation plate	A5Q00002621	0.002
FDAI91	Alarm indicator, door frame	S54370-F9-A1	0.020
FDAI92	Alarm indicator, wall version	S54370-F3-A1	0.050
FDAI93	Alarm indicator, built-in version	S54370-F5-A1	0.010
RS720	Detector base seal	S54319-F8-A1	0.012
LP720	Detector locking device (2x Allen keys, 100x set screws)	S54319-F9-A1	0.001
BA720	Base attachment	S54319-F20-A1	0.100
BA721	Base attachment wet	S54319-F29-A1	0.272
DBZ1193A	Designation plate	BPZ:4864330001	0.076
FDBH291	Detector heating unit incl. micro terminal 0.28…0.5 mm²	A5Q00004439	0.015
DBZ1194	Protective cage	BPZ:4677110001	0.138
DBZ1190-AA	Micro terminal 0.28…0.5 mm²	BPZ:4677080001	0.001
DBZ1190-AB	Connection terminal 0.5…2.5 mm²	BPZ:4942340001	0.001
-	Metal cable gland M20 x 1.5	A5Q00004478	0.039

Accessories

Detector base DB721	
	Function: ● Universal base for all point detectors of the Cerberus™ PRO FD720 series **Use**: ● For recess-mounted supply lines ● For surface-mounted supply lines with cables up to max. Ø 8 mm The detector base DB721 has a loop contact. When using the DB721, the detector line is also not interrupted when there is no point detector mounted in the detector base.

Detector base DB722	
	Function: ● Universal base with base seal for point detectors OH720 and OP720 of the Cerberus™ PRO FD720 series **Use**: ● For recess-mounted supply lines ● For surface-mounted supply lines with cables up to max. Ø 8 mm The detector base DB722 has a loop contact. When using the DB722, the detector line is also not interrupted when there is no point detector mounted in the detector base.

Sounder base DBS720	
	Function: ● Addressable sounder base for the acoustic alarm ● Compatible with all point detectors from the Cerberus™ PRO FD720 series You will find more information on the sounder base DBS720 in document A6V10218037.

Designation plate FDBZ291	
	● For labeling with the location address ● Can only be used without detector base seal FDBZ295

Detector base seal RS720	
	● For achieving a higher IP protection category ● Mounted between detector base and ceiling

Detector locking device LP720

- For protection against theft of the point detector
- Set screw M3 x 12 mm prevents the point detector being unscrewed from the detector base
- Point detector can only be removed with the appropriate Allen key

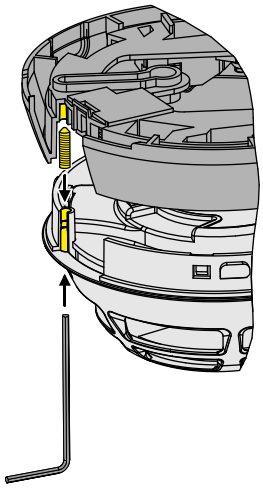

Base attachment BA720

Function:

- For routing surface-mounted ducts (max. 20 mm) and cable ducts (max. 25 x 15 mm)
- Detector base mounted quickly: The detector base clicks into place in base attachment BA720.

Base attachment wet BA721

- Base attachment wet with additional integrated rubber seal for mounting in wet or humid environments
- For achieving a higher protection category
- For mounting in wet or humid environments
- Required when using detector heating unit FDBH291
- Required when using protective cage DBZ1194
- Mounted between detector base and ceiling
- Detector base mounted quickly: The detector base simply clicks into place in base attachment wet BA721.

Designation plate DBZ1193A

- For labeling with the location address
- Can only be used with base attachment wet BA721

Detector heating unit FDBH291	
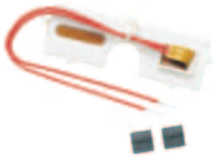	● For operating point detectors in critical ambient conditions during icy conditions or when there is a danger of moisture condensation. Examples of application: Cold stores, attics, loading ramps, cheese cellars ● Optimum function is only guaranteed in conjunction with base attachment wet BA721. ● The point detector temperature increases by approximately 2 °C over the operating temperature and thus avoids moisture condensation on the detector. ● Mounted quickly: The detector heating unit clicks into place in the detector base.

Protective cage DBZ1194	
	● To protect the point detector from damage ● Can only be mounted in combination with the base attachment humid FDB293 or base attachment wet BA721

DBZ1190-AA micro terminal and DBZ1190-AB connection terminal	
	● Micro terminal DBZ1190-AA – Cable cross section up to max. 0.5 mm² ● Connection terminal DBZ1190-AB – Cable cross section up to max. 2.5 mm² – For connecting two external alarm indicators or the cable shielding

Notes

Installation

- Universal detector base with two break-out points for surface-mounted cable entry at the side. Max. cable diameter: 8 mm.
- Extra-long mounting slits allow existing drill holes from other systems to be reused. Hole spacing 40…90 mm
- Screw terminals for conductors up to 2.5 mm²
- Space for auxiliary terminals:
  - 2x micro terminals DBZ1190-AA and
  - 2x connection terminals DBZ1190-AB
- The internal alarm indicator is centered in the detector, which makes alignment of the point detector superfluous.

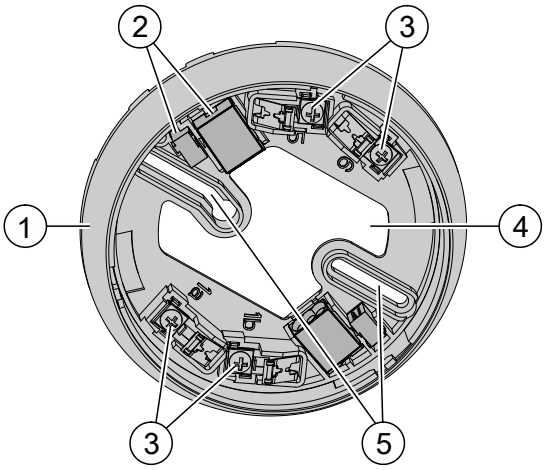

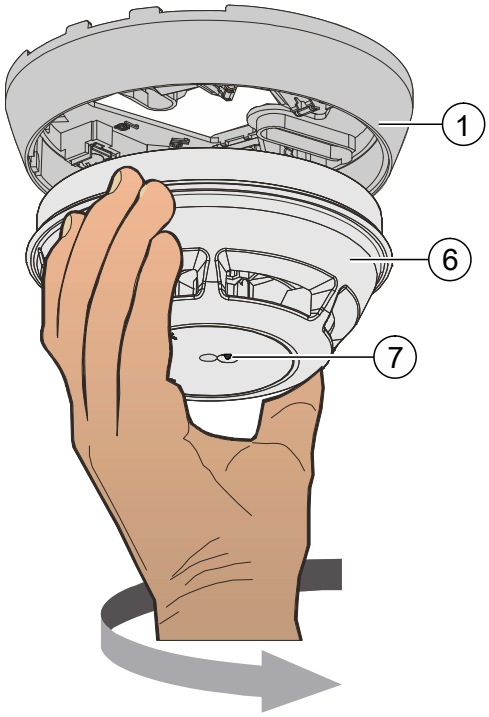

1	Detector base	5	Mounting slits
2	Auxiliary terminals DBZ1190-AA, DBZ1190-AB	6	Point detector
3	Screw terminals for detector line and external alarm indicator	7	Internal alarm indicator
4	Opening for cable entry		

Disposal

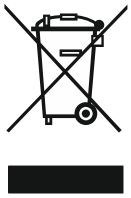

The device is considered an electronic device for disposal in accordance with European Directive and may not be disposed of as domestic waste.

- Use only designated channels for disposing the devices.
- Comply with all local and currently applicable laws and regulations.
- Dispose of empty batteries at designated collection points.

Technical data

	OH720	OP720	HI720 / HI722
Operating voltage	DC 12…33 V	DC 12…33 V	DC 12…33 V
Operating current (quiescent)	~230 µA	~220 µA	~200 µA
Max. number of external alarm indicators that can be connected	2	2	2
Operating temperature	-10...+55 °C	-10...+55 °C	-10...+55 °C
Storage temperature	-30...+70 °C	-30...+70 °C	-30...+70 °C
Air humidity (short-term moisture condensation permitted)	≤95 % rel.	≤95 % rel.	≤95 % rel.
Communication protocol	C-NET	C-NET	C-NET
Color	~RAL 9010 pure white ~RAL 9005 jet black	~RAL 9010 pure white ~RAL 9005 jet black	~RAL 9010 pure white
Weight	0.144 kg	0.138 kg	0.130 kg
Protection category (IEC 60529)	IP40	IP40	IP40
Protection category (IEC 60529) with detector base seal RS720	IP42	IP42	IP42
Standards	EN 54-7, EN 54-17, EN 54-29	EN 54-7, EN 54-17	EN 54-5, EN 54-17
Approvals			
• VdS	G209064	G209068	G209065 / G209146
• LPCB	531w/01	531e/01	531f/01 / 531f/02
• FM	3038424	3038424	3037921
• DNV GL (marine)	MEDB00003UK	MEDB00003UK	MEDB00003UR
Permissible wind speed	Max. 5 m/s	Max. 5 m/s	-
C-NET system compatibility	FS720, FC360	FS720, FC360	FS720, FC360

Dimensional drawings

OH720	OP720	HI720, HI722
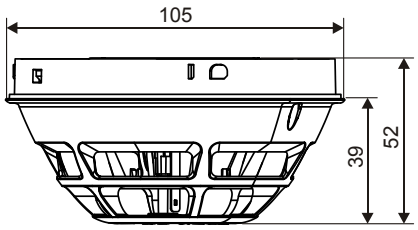	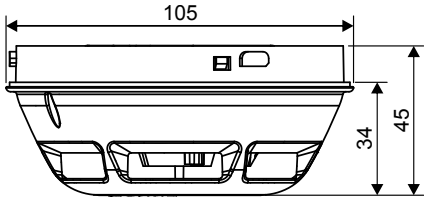	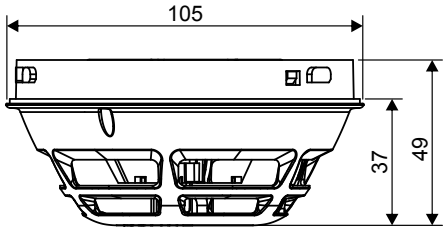

OH720 with base	OP720 with base	HI720, HI722 with base
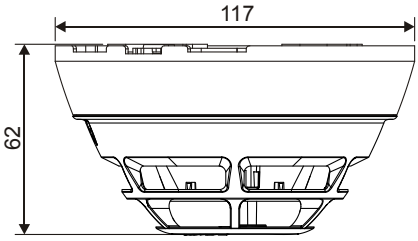	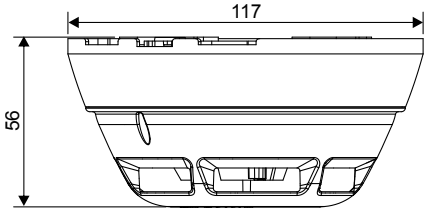	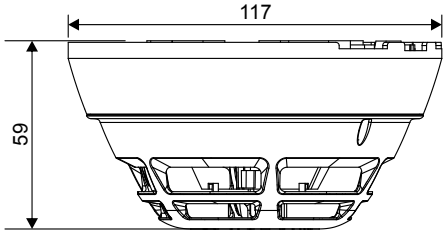

Product documentation

Dokument-ID	Titel
008115	Installation Detector heating FDBH291
A6V10200373	Installation Detector base with loop contact DB721, DB722, detector base DB720, sounder base DBS720, detector base seal RS720, detector locking device LP720, base attachment BA720
A6V10203095	Data sheet Sounder base, Alarm sounders DBS720, FDS221-R, FDS221-W
A6V10203222	Data Sheet Testequipment and accessories FDUL221, DX791, RE6, RE7T, RE8ST, RE8STCO, FDUM29x, LE3, StabexHF
A6V10212047	Technical Manual Automatic fire detectors OH720, OP720, HI720, HI722
A6V10229261	List of compatibility (for 'Cerberus™ PRO' product line)
A6V10393192	List of compatibility (for 'Cerberus™ FIT' product line)
A6V10406006	Installation Base attachment wet BA721, Detector designation plate DBZ1193A, Protective cage DBZ1194, EMC-protective cage FDBZ294

Issued by
Siemens Switzerland Ltd
Smart Infrastructure
Global Headquarters
Theilerstrasse 1a
CH-6300 Zug
+41 58 724 2424
www.siemens.com/buildingtechnologies

© Siemens Switzerland Ltd, 2008
Technical specifications and availability subject to change without notice.

Document ID A6V10202198_p_en_--
Edition 2022-05-24