SIEMENS

Installation Instructions

Model OOHC941

Multi-Criteria Fire/CO Detector

UL268 7th edition listed

Scan for electronic version

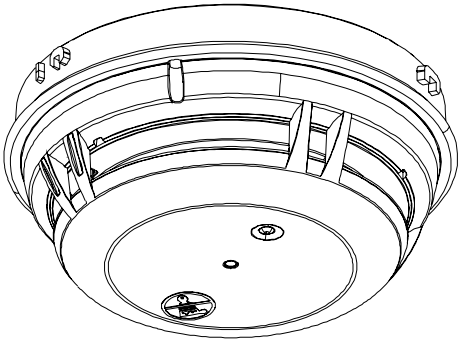

Figure 1

These instructions are written in accordance with the installation guidelines of NFPA 72, National Fire Alarm Code and CAN/ULC-S524, The Installation of Fire Alarm Systems. The model OOHC941 detector (as shown in Figure 1) meets the VEWFD (Very Early Warning Fire Detector) classification and sensitivity requirements of NFPA 76 (Standard for the Fire Protection of Telecommunications Facilities) incorporating a programmable "Alert" (Pre-Alarm) sensitivity threshold of 0.2%/ft obscuration and an "Alarm" sensitivity threshold of 1.0%/ft obscuration.

CAUTION

DO NOT install this detection device until all construction is completed.

DO NOT store this detection device where it can be contaminated by dirt, dust, or humidity.

DETECTOR PLACEMENT

Although no specific spacings are set for the detectors used for a clean air application, for multi-criteria fire detection use 30-foot center spacing (900 sq ft) from NFPA 72 initiating devices chapter, if practical, as a guide or starting point for a detector installation layout. This spacing, however, is based on ideal conditions– smooth ceiling, no air movement, and no physical obstructions. In some applications, therefore, considerably less area is protected adequately by each smoke detector. This is why it is mandatory to closely follow the installation drawings. In all installations place the detector on the ceiling, a minimum of 6 inches from a side wall, or on a wall, 12 inches from the ceiling. For CO gas detection applications, follow detector installation requirements in NFPA 72 for Installation of Carbon Monoxide Detection and Warning Equipment.

For thermal detection, use the matrix below:

Spacing, Feet	Temperature Rating, °F	With/without Guard Model
50	135, 145, 155, 165, 175	With and without STI Guard
60	135, 145, 155, 165, 175	
70	135, 145	

Drawings provided or approved by Siemens Industry, Inc., or by its authorized distributors are extremely important. The detector placements shown on these drawings were chosen after a careful evaluation of the area that is protected. Such factors as air currents, temperature, humidity, pressure, and the nature of the fire load were carefully considered. Especially noted were the room or area configuration and the type of ceiling (sloped or flat, smooth or beamed). Siemens Industry, Inc.'s extensive experience in the design of the system assures the best detector placement by following these drawings. Sound engineering judgment by qualified personnel must be followed.

TO AVOID NUISANCE ALARMS

Do not locate the detectors where excessive smoke concentrations exist under normal conditions, or in areas of prolonged high relative humidity where condensation occurs.

Do not locate the detectors next to an oil burner, or garage where exhaust fumes can trigger an alarm. Other causes of false alarm are dust accumulation, heavy concentrations of steam, heavy pipe or cigar smoke, and certain aerosol sprays.

AIR CURRENTS

Before a detector can sense a fire, the products of combustion or smoke must travel from the fire to the detector. This travel is especially influenced by air currents; therefore, consider air movement when designing the system. While combustion products tend to rise, drafts from hallways, air diffusers, fans, etc., may help or hinder the travel of combustion products to the detector. When positioning a detector at a particular location, give consideration to windows and doors, both open and closed, to ventilating systems, both in and out of operation, and to other factors influencing air movement. Do not install a detector in the air stream of a room air supply diffuser. It is better to position a detector closer to an air return.

The distance that products of combustion or smoke travel from a fire to the detector is not usually the shortest linear route. Combustion products or smoke usually rise to the ceiling, then spread out. Average ceiling heights of 8 to 10 feet do not abnormally affect detector response. High ceilings, located in churches, warehouses, auditoriums, etc., do affect detector response and should be considered.

SPECIAL CEILING CONSTRUCTION FACTORS

Ceiling obstructions change the natural movement of air and combustion products. Depending on the direction of smoke travel, joists and beams can slow the movement of heated air and smoke, while pockets between them can contain a reduced level of smoke. Take obstructions created by girders, joists, beams, air conditioning ducts, or architectural design into consideration when determining area protection. Refer to the Initiating Devices chapter of NFPA 72 for Location and Spacing requirements for specific types of construction; e.g. beam, suspended, level, sloped and peaked ceilings.

TEMPERATURE – HUMIDITY – PRESSURE – AIR VELOCITY

The temperature range for the OOHC941 detector is 32 °F (0 °C) to 120 °F (49 °C). Use the detector in environments where the humidity is 15 % to 95 % RH continuous non-condensing and 1 % to 99 % for short duration (24 h to 48 h). Normal changes of atmospheric pressure do not affect detector sensitivity. The air velocity range is 0-4000 ft/min for open areas applications. Follow detector spacing and location requirements in NFPA 72 Chapter for High Air Movement Areas and Control of Smoke Spread. The detectors can also be installed in duct applications between 0 and 4000 ft/min. For duct installations follow detector installation requirements in NFPA 90A, Chapter for Special Ceiling Construction Factors. When the detectors employ a fixed temperature rating of 165 °F (74 °C) or less, they are intended for a maximum installation temperature of 100 °F (38 °C).

LED INDICATOR OPERATION

The Model OOHC941 contains an LED indicator capable of flashing either one of three distinct colors: green, yellow, or red. The microprocessor-based detector monitors the following:

- Smoke in its sensing chamber
- Smoke sensitivity is within the range indicated on the nameplate label
- Internal sensors and electronics

Based on the results of the monitoring, the LED indicator flashes the following:

Flash Color	Condition	Flash Interval (Seconds)
Green *	Normal supervisory operation. Smoke sensitivity is within rated limits.	10
Yellow	Detector is in trouble and needs replacement.	4
Red	Alarm	1
No Flashes *	Detector is not powered, or replacement is needed.	–
* LED can be turned off. Please follow the corresponding description of the Panel used.		

DETECTOR PROGRAMMING

Each detector must be programmed to respond to an address between 001 - 252.

- To program the detector address, use the Model DPU Device Programming Unit. Refer to the DPU Manual, P/N 315-033260.
- Record the loop and device number (loop address) for the detector on the detector label and on the base to prevent installing the detector in the wrong base. The optional DPU label printer can be used for this purpose.

Each detector provides pre-programmed parameter sets which can be selected by the panel. The OOHC941 provides three different alarm channels: the multi-criteria (UL268) and direct in-duct (UL268A) channel with supplementary heat detection, the dedicated heat (UL521) channel, and the CO (UL2075) channel. They can be used simultaneously and configured individually by the panel. Follow the description and instructions provided in the operation manual of specific control panel used. The OOHC941 can be set to the OOHC941 Selectable Application Profiles, OOHC941 Selectable Fixed Temperature Threshold Profiles and OOHC941 Selectable Alarm Threshold Setting Profiles shown in the tables below and to the right.

Additionally, the detector can have another channel that can be configured by the panel to have a low or high temperature warning in the range from -4 to 120 °F (-20 to 49 °C).

Additionally, the detector can be configured by the panel to have a CO gas concentration warning in the range of 20-600 ppm.

OOHC941 Selectable Fixed Temperature

Threshold Profiles
Fixed temperature 135 °F
Fixed temperature 145 °F
Fixed temperature 155 °F
Fixed temperature 165 °F
Fixed temperature 175 °F
Fixed temperature 135 °F + Rate of Rise (RoR) 15 °F
Fixed temperature 175 °F + Rate of Rise (RoR) 15 °F
Fixed temperature 135 °F + Rate of Rise (RoR) 20 °F
Fixed temperature 175 °F + Rate of Rise (RoR) 20 °F

OOHC941 Selectable Alarm Threshold Setting Profiles
2.50 % / ft Threshold
3.00 % / ft Threshold
See also section REPLACEMENT OF A DETECTOR IN AN EXISTING SYSTEM

ELECTRICAL
Supply voltage: 13…32 VDC
Maximum alarm current: 750 µA
Maximum standby current: 430 µA

Refer to the panel Installation, Operation and Maintenance Manual for maximum line resistance of the loop card.

WIRING
Detector bases for Model OOHC941 should be connected as shown in Figure 2 and 3.
The OOHC941 supports two operation modes: polarity insensitive mode and isolator mode. The Detector can be wired for either mode (refer to Figure 2 and 3). During the isolator mode, the built-in dual isolators will work at both sides of the Detector to isolate the line short in front or behind the module.
When the OOHC941 is wired in polarity insensitive mode, Line -6 and -5 can be either line of the loop.
When the OOHC941 is wired for Isolator mode, the positive line needs to be connected to 1b and the negative line to 6. The next device needs to be connected to 1b and 5.
The Line Isolator is located between connector 6 and 5.

!	NOTICE
	Ensure that the panel supports Isolator mode for the OOHC941 product version 30. **Isolator mode must not be used with a OOHC941, product version <30. You will find the product version number on the detector label.** OOHC941 S54320-F8-A2 30

DETECTOR MOUNTING
The recommended orientation of the detector for wall mounting is shown in Figure 4. To ensure proper installation of the detector head into the base, be sure the wires are properly dressed at installation:
- Position all wires flat against the base.
- Take up all slack in the outlet box
- Route wires away from connector terminals.

Smoke detectors are not to be used with detector guards unless the combination has been evaluated and found suitable for that purpose. UL listed with STI Mechanical Protection Guard Model: STI-9604 (see www.STI-USA.com for details).

TO INSTALL DETECTOR HEAD:
Rotate detector counterclockwise while gently pressing on it until the detector seats fully into base.
Then rotate the detector clockwise until it stops and locks in place. Insert optional locking screw (Order Model LK-11).

TO REMOVE DETECTOR HEAD:
- Loosen locking screw, if installed. Then rotate the detector counterclockwise until stop is reached.
- Pull detector out of base.

OOHC941 Selectable Application Profiles

Telecommunication (See Special Application)	Very controlled environment, clean, temperature closely regulated, high value clean signal processing equipment operating and high air velocity conditions. Often has high ceilings. Meets the detection requirements of NFPA 76 Standard for the Protection of Telecommunication Equipment by providing a Very Early Warning Fire Detection Pre-Alarm to prevent downtime and maintain critical business continuity.
Incipient (See Special Application)	Very controlled environment, clean, temperature closely regulated. Provides early warning detection alarm.
Ion equivalent	Used as an alternative to Ionization detector. Sensitive to flaming fires and small fire signature particles. Can be used for cross zoning suppression requirements.
Data Center (open area protection)	Used for open area protection in controlled environment containing data processing equipment.
Computer Room	Very controlled environment, clean, temperature closely regulated, high value clean signal processing equipment operating and high air velocity conditions.
Precious Storage	Sensitve materials or equipment storage, clean dust-free environment, earliest warning desired.
Power Generation	Controlled environment, minor or no temperature swing, RF, welding, electrical arcing present. Some airborne (deceptive phenomena) contaminant present.
Hospital	Controlled clean environment. High level risk. Some exposure RF generating equipment. Exposure to cleaning solvents.
Health Care	Higher level risk, relatively clean, electronic equipment. Some chemical and cleaning vapor exposure.
Dormitory	Airborne dust and temperature changes, living quarters. Cooking fumes, smoking and steam.
Utility Room	Transformer room, normal to somewhat dirty environment, heat from running equipment.
Lobby	Relatively clean area, temperature changes, cellular phones, some outside particulate.
Office	Reasonably clean, climate-controlled atmosphere.
Hotel	Life safety, some temperature swings, steam, smoking and cooking possible.
School	Life safety, some temperature swings and airborne contaminants.
Warehouse	Airborne dust, equipment, forklift and light to medium dock area and exhaust fumes.
Manufacturing	Semi-controlled environment can include soldering, welding, airborne contaminants including chemical vapor exposure.
Parking Garage	Airborne dust. Car and diesel fumes, large temperature swings.
Open Environment	Large open areas, atriums, arenas, stadiums. Temperature swings, deceptive phenomena from fumes possible.
EMI noise	Electrical interface, RF and our specialized equipment generating electrical signal. Other environmental conditions are normal.
Hostile	Dirty, dusty, humid, operating equipment, RF present, wide temperature swings.
Data Center w/CO (open area protection)	Used for open area protection in controlled environment containing data processing equipment.
Hotel w/CO	Provides CO sensor supporting nuisance alarm avoidance, some temperature swings, steam, smoking and cooking possible.
Hostile w/CO	Adds CO sensor to robust smoke detection for avoiding nuisance alarms from deceptive phenomena. Dirty, dusty, humid, operating equipment, RF present, wide temperature swings.
Duct w/CO	Smoke detection in duct with CO support. High air velocity, dirty, dusty, humid, wide temperature swings.

OOHC941 CO Life Safety Profile

Balanced US1	The Balanced US1 parameter set meets UL2075 and fulfills sensitivity requirements from UL2034, CSA 6.19-1, and CAN/ULC-S588.

DETECTOR TESTING

Only qualified service personnel should test. To assure proper operation of the detector, both the Sensitivity and Functional Test should be conducted. The minimum test schedule may be found in the current edition of NFPA 72. The CO sensor of the OOHC941 has a 10-year lifetime from the date of installation.

SENSITIVITY MEASUREMENT

The sensitivity of OOHC941 detectors can be tested individually using the DPU. Refer to the DPU Manual, P/N 315-033260. The sensitivity can be measured by the panel. Follow the instructions of the panel used.

Polarity insensitive wiring:

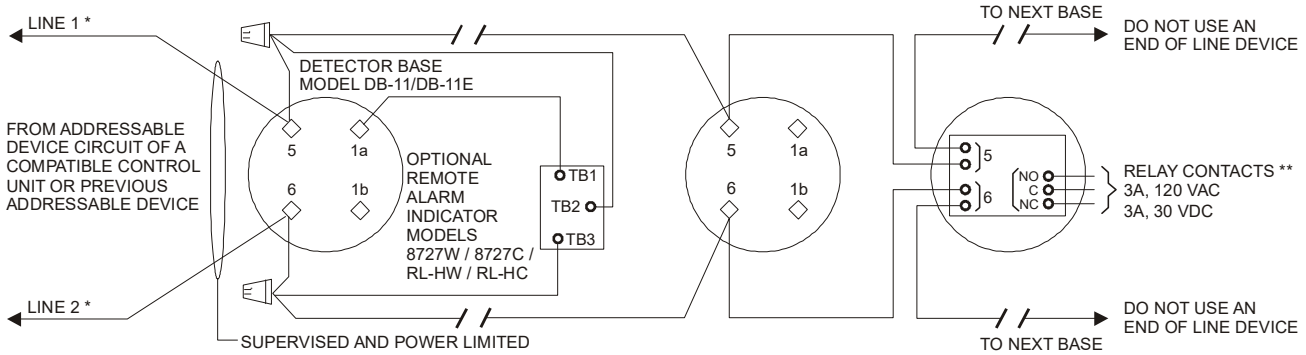

* OOHC941 is a polarity insensitive detector. Line 1 and Line 2 can be either line of the loop.

** The relay contacts are shown after System reset, which represents the non-alarm condition.

Figure 2

Isolator mode wiring:

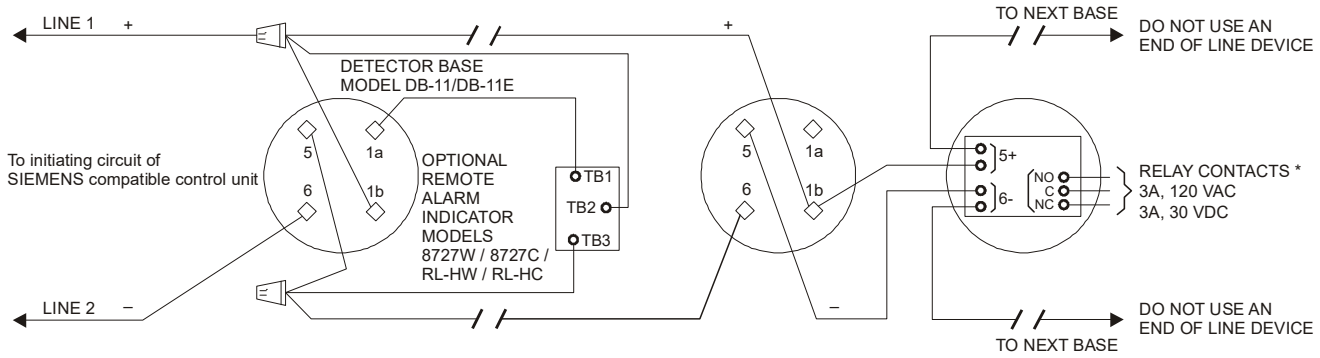

* The relay contacts are shown after System reset, which represents the non-alarm condition.

Figure 3

i	Wire size: maximum 14 AWG, minimum 18 AWG (Wire larger than 14 AWG can damage the connector)

Recommended Detector Wall Mounting / Detector Guard Orientation

1. Mount box on wall with exterior mounting holes (1) in upper left and lower right position.
2. Mount detector base to 4-inch square box with locking hole (2) on left top.
3. When 4-inch square box and detector base are mounted as shown, detector LED will be in recommended 0° position with detector inserted in base. When mounting the STI-9604 mechanical guard (3) on wall or ceiling, use orientation indicated.

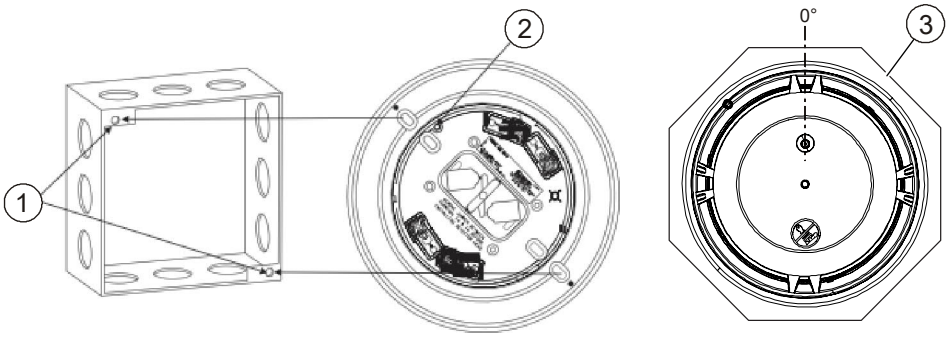

Figure 4

SMOKE DETECTOR FUNCTIONAL TEST (SMOKE TEST GAS)

The fire control panel must be programmed to test mode prior to performing a functional (* Go-No-Go) smoke entry test. Failure to do so may result in a test failure. Refer to the specific control panel installation operations manual for proper “test mode” programming instructions. To determine how to put the control panel in “test mode”, specific programming instructions are located in the panel documentation.

To activate the detector with test gas, only use the following test gases:

- HSI SmokeCheck™ testgas P/N HO-25S
- HSI PurCheck P/N HO-30S
- Smoke Sabre Smoke Detector Tester P/N SMOKESABRE-01-001
- Solo A5 Smoke Detector Tester Gas P/N SOLOA5-001
- Testifire 1001 / 2001 P/N TS3-001

Strictly follow the testing instructions provided on the gas canister label. After applying the test gas for 1-2 seconds, the smoke alarm will occur within 4-10 seconds. If not, check the Test Mode and repeat the test. Do not repeat the test multiple times or apply the test gas too long – this will cause CO-troubles.

CAUTION

DO NOT use at distances smaller than 2 feet (0.6 m) from detector. Spray the test gas for a period of 1-2 seconds. Excessive spraying may affect the detector’s sensitivity and cause CO sensor troubles.

* This test is simply used to ensure that smoke can enter the sensing chamber and alarm the control panel when the detector reaches the programmed obscuration (concentration) level.

CAUTION

DO NOT use any test gas other than the one mentioned above as compatibility to the CO sensor cannot be assured.

CO DETECTOR FUNCTIONAL TEST (CO TEST GAS)

The fire control panel must be programmed to test mode prior to performing a functional (* Go-No-Go) CO gas entry test. Failure to do so may result in test failure. Refer to the specific control panel installation operations manual for proper “test mode” programming instructions. To determine how to put the control panel in “test mode”, specific programming instructions are located in the panel documentation.

Test by activating the detector using the approved CO test gases:

- Siemens CO Test Gas P/N 500-650053
- SDI Solo C3 or C6, P/N SOLOC3-001, SOLOC6-001
- HSI CO Check, P/N HO-CO2S
- Testifire 1001 / 2001 P/N TC3-001

Following the instructions with product and provided on the CO gas canister label. Spray the CO gas stream into the detector opening from the opposite side of the alarm indicator LED a distance of approximately 2 inches (5 cm) from the CO sensor to the straw of the test gas can is required. Use only short (approx. 1-2 seconds, BUT NOT LONGER THAN 2 seconds) activation of the gas can. After applying the test gas for 1-2s, the CO alarm will occur within 4-10 seconds. If not, please check the Test Mode again and repeat the test. Do not repeat the test multiple times or apply the test gas too long – this will cause CO-troubles.

* This test is simply used to ensure that a CO gas can reach the CO sensor and alarm the control panel when the detector reaches the programmed obscuration (concentration) level.

The OOHC941 detectors can also be tested individually using the DPU. Refer to the DPU Manual, P/N 315-033260.

MAINTENANCE
The control unit automatically indicates the trouble message for the OOHC941 detector whose smoke chamber changes to the level where the set sensitivity cannot be maintained. In such circumstances, the detector may require replacement.

CAUTION
Under no circumstances is the detector head to be disassembled. No repairs should be attempted.

DO NOT PAINT
The detector is marked DO NOT PAINT. This is intended to prohibit painting during routine maintenance of the occupancy which can affect proper operation of the detector.

REPLACEMENT OF A DETECTOR IN AN EXISTING SYSTEM
Detectors with product version ≥30 (UL268 7th, Isolator mode) have some minor differences to devices which were built before product version 30. In case a legacy Detector needs to be replaced in an existing system, please follow these instructions.
Alarm Verification:
Legacy Detectors have 3 Sensitivity Settings with integrated Alarm Verification
2.50 % / ft Threshold, verified
3.00 % / ft Threshold, verified
3.50 % / ft Threshold, verified

Alarm verification is removed in detectors with product version ≥30. If the panel configuration remains unchanged, the alarm verification feature is no longer available. If alarm verification is required, update the panel to the latest revision.

Special Application
The Special Applications (Telecommunications) selectable application profile setting shall be used for environments and applications that are clean with little or no Deceptive Phenomena. Detectors set to the special application sensitivity are not suitable for use in areas where cooking appliances may be used or in sleeping areas. If cooking appliances are used within the protected space a normal application mode or configuration must be used for that area. A normal application mode is other than indicated as Special Application in the “Selectable Application Profiles” table located in this document. The detector default sensitivity setting is for a normal standard “office” environment. The special applications setting incorporates a pre-alarm and sensitive alarm levels to provide a Very Early Waring Fire Detection (VEWFD) alarm level for applications to avoid business disruption.

Typical suitable applications for the special applications Telecommunications’ application profile include:
Telecommunications, Data Centers, IT rooms, Clean Rooms, Laboratories and any clean environment.

Applications not suitable for the special application Telecommunication application profile setting:
The special application mode of operation is not for general use and may be more prone to false alarms if used in unsuitable environments. Unsuitable environments for the special application setting are: hotels, hospitals, nursing homes, restaurants, kitchens, condo, auto repair shops, parking garages, industrial production facilities, warehouses, power generation facilities. Any environment or application which may exhibit deceptive phenomena (dirt, dust, steam or cooking) is not suitable for the special application telecommunications profile setting. Note: other “non special applications” selectable application profiles settings are available and suitable for these and other applications. See the table titled “Selectable Application Profiles” table in this document for options and application descriptions. Failure to follow these guidelines may result in unwanted nuisance alarms.

Method to configure the detector’s special application sensitivity:
The detector default sensitivity is for a standard “office” environment. For programming and to select the special application setting / profile (Telecommunications) refer to the specific Siemens compatible fire alarm control panel operation manual.

In the device line, up to 30 of any compatible devices in polarity insensitive mode with 20 ohms max line resistance can be isolated between two modules in isolator mode in a Class A Style 6 wiring.
In the device line, up to 30 of any compatible devices in polarity insensitive mode with 20 ohms max line resistance can be isolated behind one module in isolator mode in a Class B Style 4 wiring.

HLIM isolator module and SBGA-34 sounder base cannot be used in the same loop with the modules in isolator mode.

FCC Statement

	WARNING!
	Installation and usage of equipment not in accordance with instructions manual may result in: Radiation of radio frequency energy Interference to radio communications • Install and use equipment in accordance with installation instructions manual • Read the following information

This equipment generates, uses, and can radiate radio frequency energy and if not installed and used in accordance with the instructions manual, may cause interference to radio communications.
It has been tested and found to comply with the limits for a Class A computing device pursuant to Part 15 of FCC Rules, which are designed to provide reasonable protection against such interference when operated in a commercial environment.
Operation of this equipment in a residential area is likely to cause interference in which case the user at his own expense will be required to take whatever measures may be required to correct the interference.

© Siemens Industry, Inc.
Data and design subject to change without notice.