SIEMENS

Installation Instructions

Model ABHW-4S

Intelligent Audible Base for Sleeping Area with 520Hz Low Frequency Sounder

Introduction	The Model ABHW-4S audible base from Siemens Industry, Inc. is an intelligent supervised base which is designed for use in sleeping areas. The base generates a 520 Hz square wave audio signal complying with the latest NFPA 72 standard and is UL/ULC listed. It provides six selectable tone patterns, two volume levels when used with compatible fire detectors and control panels. The ABHW-4S audible bases wired in the same device loop are fully synchronized with FD-UL detectors and also support RL-HC, RL-HW remote lamps. The ABHW-4S provides 520 Hz Steady, Temporal 3, Temporal 4, Temporal 4 low power, March time 120 and Canadian March time 30. ABHW-4S is fully compatible with all Siemens addressable detectors and recognizes the detector type automatically. (Refer to the list of compatible detectors and control panels in this document).
Application note	The ABHW-4S is a UL & ULC listed smoke detector supplementary device. It meets or exceeds 85 dB at 10-foot audibility requirement as specified in UL268 & ULC-S529. When used in conjunction with listed, compatible Siemens equipment, the ABHW-4S may be used in lieu of single/multiple station smoke alarms to achieve enhanced, system-level functionality. The ABHW-4S can also meets the requirements specified in UL464, UL2075 including 520 Hz low frequency requirements for “Sleeping Area”.

A6V10405588_en--_d
2020-05-25

Siemens Industry, Inc.
Smart Infrastructure

Specifications

Physical Specifications:

- Operating temperature: 32 °F ~ 120 °F (0 °C ~ 49 °C)
- Operating humidity:10 ~ 95%RH (Non Condensing)
- Compatible electrical mounting boxes: 4” square gang box **ONLY** with 2.5-inch depth minimum; 4” octagon box is **NOT** compatible

Sound Output:

- High: ≥ 85 dB
- Low: ≥ 75 dB

Tones:

- Steady
- Temporal 3
- Temporal 4
- Temporal 4 low power
- March time 120
- Canadian March time 30

Electronic Ratings:

- Operating voltage:
  - External power: 16 ~ 33 VDC
- Supervisory current (max):
  - From loop: 250 µA
  - From external: 1.0 mA
- Alarm current (max):
  - External powered:
    - High dBA: 65 mA @ 33 VDC
      90 mA @ 24 VDC
      165 mA @ 16 VDC
      0.85 mA from loop
    - Low dBA: 28 mA @ 33 VDC
      33 mA @ 24 VDC
      45 mA @ 16 VDC
      1.6 mA from loop

Constraints

1. The alarm current of ABHW-4S has to be energized by any UL listed 24 VDC regulated auxiliary power supply including the aux power output of XLS/Desigo Fire Safety Modular/Cerberus PRO Modular, FC2005/FC901, FC2025/ FC2050/FV2025/FV2050, FC922/FC924/FV922/FV924 and

	PAD-3/PAD-4/PAD-5 (refer to Figure 1), ZIC-4A (FireFinder-XLS/Desigo Fire Safety Modular/Cerberus PRO Modular zone indicating card (NAC), refer to Figure 3), PAD-3/ PAD-4/PAD-5 (Figure 4), or a 24 VDC NAC circuit such as FC2005/ FC901 (Refer to Figure 5.1) or NAC circuit such as FC2025/FC2050/FV2025/FV2050, FC922/FC924/FV922/ FV924 (Refer to Figure 5.2). 2. The alarm current of ABHW-4S **CANNOT** be energized by a 24 V FWR power supply. 3. The maximum number of ABHW-4S is related to the maximum current rating and the power line resistance of the auxiliary power supplies applied on the ABHW-4S. Refer to the related installation instructions of the auxiliary power supply. 4. The maximum loop line resistance cannot exceed the maximum line resistance defined in the compatible fire control panels. 5. T-tapping of the notification appliance circuit is not allowed. 6. The NAC output must be set to a steady DC if it is used for ABHW-4S.
Configuration ***Important!***	The ABHW-4S must be configured by the panel when it is connected with FD-UL detectors (see Table 1). Failure to configure the ABHW-4S will cause problems. For additional information please refer to the manual of related panel. Also, for use with H-Series detectors (see Table 2) it does not require panel configuration as it will function the same as an ADBH-11 which will not be synchronized.

Detector wiring	(Refer to Figures 7 and 8) Audible base Model ABHW-4S should be interconnected as shown in the Installation/ Wiring Diagrams and wired to the specific system modules and control panels following the appropriate instructions. For operation with FireFinder-XLS/Desigo Fire Safety Modular/Cerberus PRO Modular, FC2005/FC901, FC2025/FC2050/FV2025/ FV2050, FC922/FC924/FV922/FV924 system, note any limitations on the number of audible bases permitted on each notification appliance circuit or 24 VDC regulated power supply, depending on the total cable resistance and total load of each circuit. (See ELECTRICAL RATINGS section.) **Note:** Recommended wire size: 18 AWG min.; 14 AWG max. Wire larger than 14 AWG can damage the connector.
Detector mounting	The detector base comes from the factory prewired. All signaling and initiating circuits are connected directly to the back of the ABHW-4S audible base using the four position terminal blocks.
Base mounting	1. Route all wires out from the outlet box. 2. When the alarm LED viewing is critical, position the LED mark on the base in the intended direction (Refer to Figure 8). 3. Make connections directly to the audible base terminals located on the back of the base. Refer to the related Installation/Wiring diagram. 4. After all bases are installed, check loop continuity. For ABHW-4S loop continuity check, refer to the DPU or SDPU Manual, “Testing a FireFinder-XLS Loop”. 5. If loop continuity is acceptable, proceed with detector head installation.
Detector placement	Use a 30-foot center spacing (900 sq ft), as a starting point referred to in NFPA Standard 72 National Fire Alarm Code and CAN/ULC-S524, in a detector installation layout. This spacing is based on ideal conditions—smooth ceiling, no air movement, and no physical obstructions. In all installations (except in special circumstances like computer room under floors), locate the detector on the ceiling, a minimum of 6 inches from a side wall, or on a wall,

between 4 and 6 inches from the ceiling.

If questions arise regarding detector placement, it is extremely important that the drawings provided or approved by Siemens Industry, Inc., or by its authorized distributors be followed! The detector placements shown on these drawings were chosen after a careful evaluation of all facets of protecting the area. Environmental factors such as air current, temperature, humidity, air pressure, and the nature of the fire load are carefully considered. Special consideration is given to room or area configuration and the type of ceiling (sloped or flat, smooth or beamed). Siemens Industry, Inc.'s extensive experience in the design of fire detection systems assures optimum detector placement and is reflected in these drawings. Follow sound engineering judgment made by qualified personnel.

Compatible fire alarm control panels:

Model	System Type	Doc. P/N
DLC (See Page 12 Note 1)	FireFinder® XLS FACP	315-034242
FC2005	Desigo™ Fire Safety 50-point panel	A6V10333722
FC901	Cerberus™ PRO 50-point FACP	A6V10336754
FC2025/FC2050/ FV2025/FV2050	Desigo 250 & 500 point Fire Alarm Control Panels	A6V10337045
FC922/FC924/FV922/ FV924	Cerberus PRO 250 & 500 point Fire Alarm Control Panels	A6V10356958
XDLC	Desigo Fire Safety Modular Cerberus PRO Modular	A6V11231620 A6V11231627

Compatible detectors:

FD-UL series detectors (table 1)**:**

Model	Siemens Part #	Doc. P/N	Type / Description
FDO421	S54320-F4-A1	A6V10323926	Desigo optical detector
FDOT421	S54320-F6-A1	A6V10323934	Desigo optical / heat detector
FDT421	S54320-F5-A1	A6V10323930	Desigo heat detector
FDOOT441	S54320-F7-A1	A6V10324655	Desigo dual optical heat detector
FDOOTC441	S54320-F8-A1	A6V10324657	Desigo dual optical heat & CO detector
OOH941	S54320-F7-A2	A6V10324659	Cerberus PRO dual optical heat detector
OOHC941	S54320-F8-A2	A6V10324661	Cerberus PRO dual optical heat & CO detector
OP921	S54320-F4-A2	A6V10323928	Cerberus PRO optical detector
OH921	S54320-F6-A2	A6V10323936	Cerberus PRO optical / heat detector
HI921	S54320-F5-A2	A6V10323932	Cerberus PRO heat detector

H-series detectors (table 2)**:**

Model	Siemens Part #	Doc. P/N	Type / Description
HFP-11	500-033290	315-033290	H-Series optical / heat detector
HFPT-11	500-033380	315-033290	H-Series heat detector
SFP-11	500-033290C	315-033290C	Canada H-Series optical / heat detector
SFPT-11	500-033380C	315-033290C	Canada H-Series heat detector
HFPO-11	500-034800	315-034800	H-Series optical detector
SFPO-11	500-034800C	315-033290C	Canada H-Series optical detector

Compatible remote lamps (table 3)**:**

Model	Siemens Part #	Doc. P/N	Type / Description
RL-HW	500-033310	315-033230	Remote alarm lamp (wall)
RL-HC	500-033230	315-033230	Remote alarm lamp (ceiling)

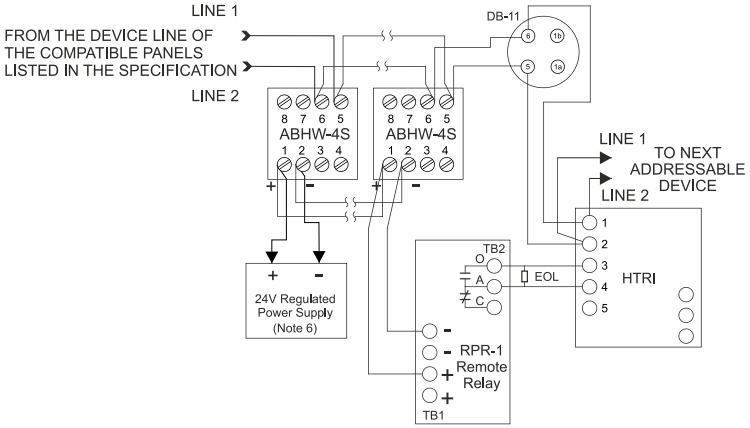

Figure 1
Typical Non-Isolated Installation/Wiring Diagram for ABHW-4S Audible Base Powered by 24 VDC Regulated Power Supply

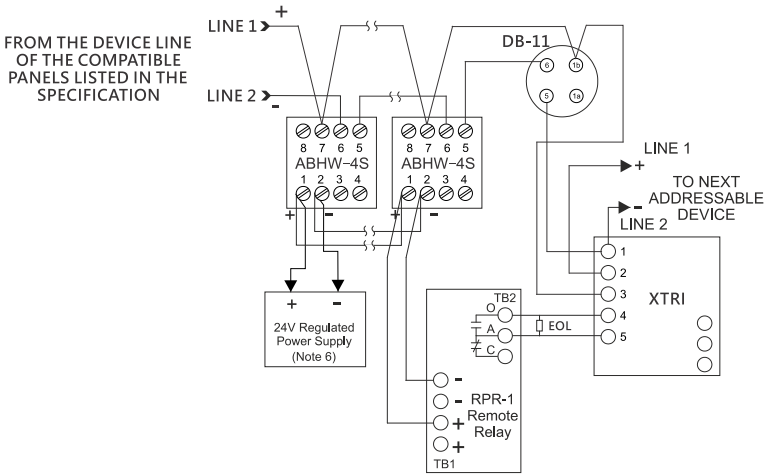

Figure 2
Typical Isolated Installation/Wiring Diagram for ABHW-4S Audible Base Powered by 24 VDC Regulated Power Supply

Figure 1 and 2 Notes:

1. RPR-1 remote relay and HTRI are used for 24 VDC power supervision. 24 VDC wire open will cause trouble reported by HTRI. Refer to Installation Instruction of RPR-1 (315-096055).
2. ABHW-4S terminals 5-6 are polarity insensitive. Line 1 and Line 2 can be either line of device loop.
3. EOL device of HTRI: 3.6 K, 1/4 W resistor, P/N 140-820185.
   EOL device of HTRI: 470 Ohm, 1/4 W resistor, P/N 140-820164.
   EOL device of XTRI: 470 Ohm, 1% 1/2 W Resistor, P/N A5Q00073045.
4. ABHW-4S can be wired either Style Z (Class A) or Style Y (Class B).
5. For the max load current, refer to the specifications of the compatible panels listed in this document.
6. The 24 VDC regulated power supply could be the Aux Power Output from the compatible panels or from PAD-3/PAD-4/PAD-5, or other UL listed 24 VDC regulated power supply. 24 V FWR power supply can't be allowed.

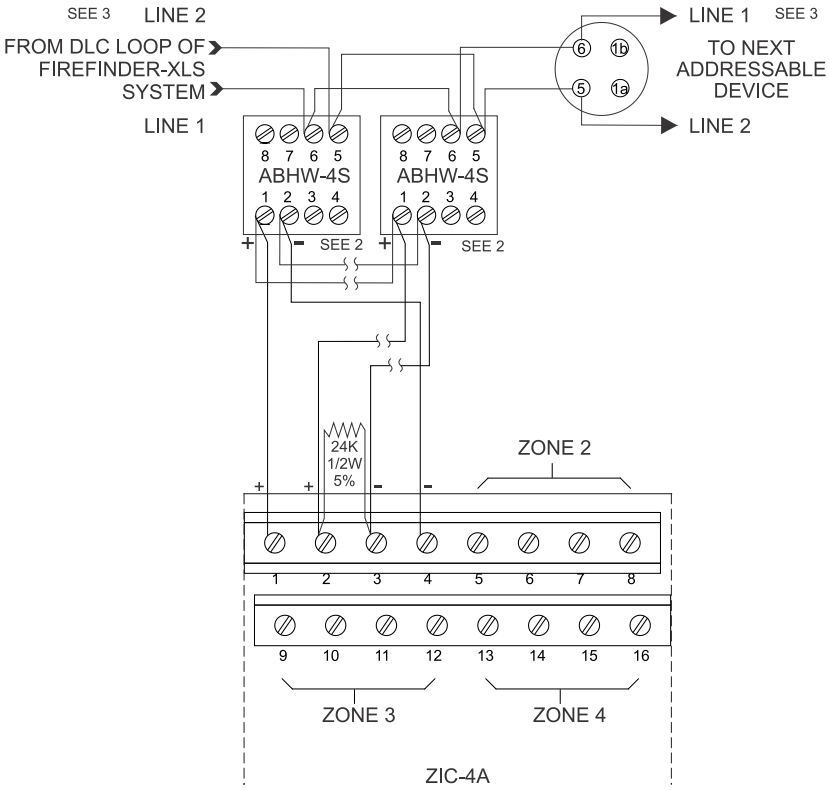

Figure 3
Installation/Wiring Diagram for ABHW-4S Audible Powered by ZIC-4A (NAC of FireFinder-XLS/Desigo Fire Safety Modular/Cerberus PRO Modular System)

Figure 3 Notes:

1. Polarity shown in active state at terminals 1 and 2 of ABHW-4S and 1-4 of ZIC-4A. Proper polarity must be maintained or audible base will not operate properly. Each audible base must be tested to verify operation.
2. Tone selection (Refer to page 12, Note 4, for more information).
3. ABHW-4S terminals 5-6 are polarity insensitive. Line 1 and Line 2 can be either line of the loop.
4. The wiring of ABHW-4S shown in the diagram is Style Z (Class A). It may also be wired as Style Y (Class B).
5. ZIC-4A Notification Appliance Circuits provide 4 outputs that can be configured for Class A. or Class B. Refer to the ZIC-4A Installation Instructions, P/N 315-033050.
6. EOL resistor, 24 k ohms, 1/2 watt, 5%, P/N 140-820405.
7. NAC circuit does not provide isolation.

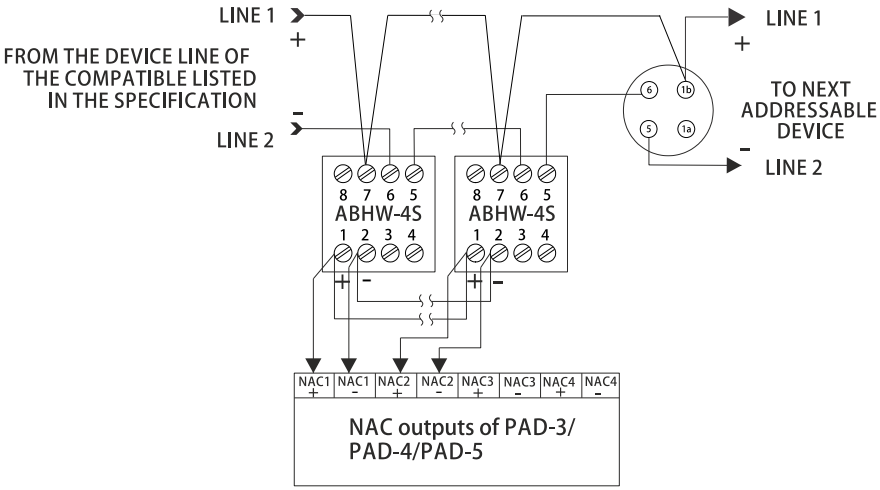

Figure 4
Typical Isolated Installation/Wiring Diagram for ABHW-4S Audible Base Powered by NAC of PAD-3/PAD-4/PAD-5 System

Figure 4 Notes:

1. The NAC circuit shown in the diagram is the active state at terminal 1 and 2 of ABHW-4S.
2. ABHW-4S terminals 5-6 are polarity insensitive. Line 1 and Line 2 can be either line of device loop.
3. The wiring at NAC of PAD-3/PAD-4/PAD-5 shown in the diagram for ABHW-4S is Style Z (Class A) (No EOL needed). If Style Y (Class B) wiring used at NAC output, EOL (24 K, 0.5 W resistor) must be used.
4. For the max load current and max cable resistance, refer to the specifications of PAD-3/PAD-4/PAD-5, P/N: 315-099082/315-050217/A6V101030358.
5. NAC circuit does not provide isolation.

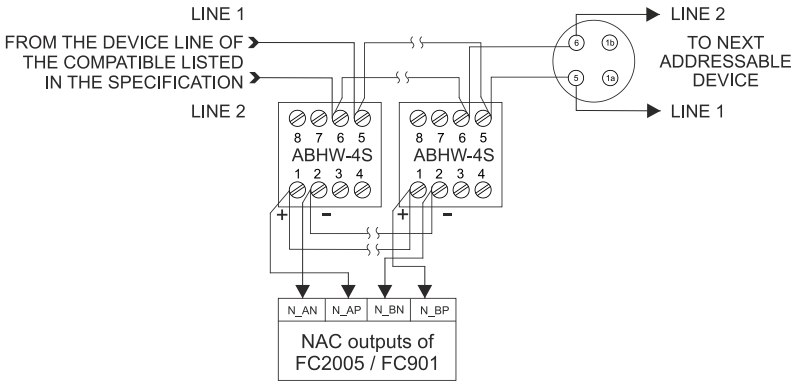

Figure 5.1
Installation/Wiring Diagram for ABHW-4S Audible Base Powered by NAC of FC2005/FC901 system

Figure 5.1 Notes:

1. The NAC circuit shown in the diagram is the active state at terminal 1 and 2 of ABHW-4S.
2. ABHW-4S terminals 5-6 are polarity insensitive. Line 1 and Line 2 can be either line of device loop.
3. The wiring at NAC of FC2005/FC901 shown in the diagram for ABHW-4S is Style Z (Class A) (no EOL needed). If Style Y (Class B) wiring used at NAC output, EOL (24 K, 0.5 W resistor) must be used.
4. For the max load current and max cable resistance, refer to the specifications of FC2005 / FC901.

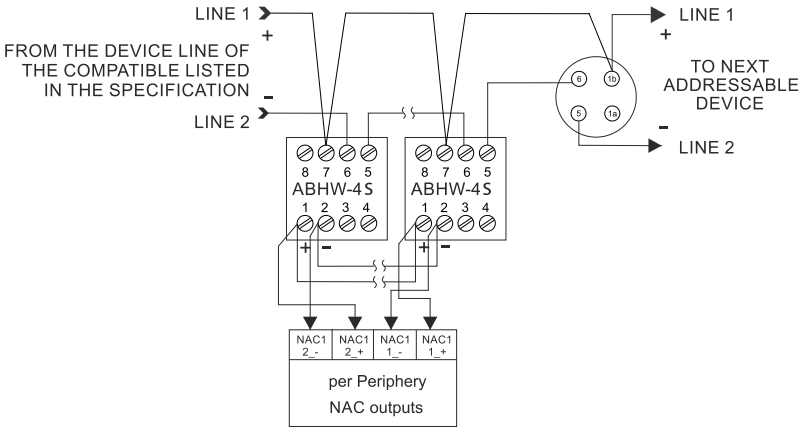

Figure 5.2
Typical Isolated Installation/Wiring Diagram for ABHW-4S Audible Base Powered by NAC of FC2025/FC2050/FV2025/FV2050 and FC922/FC924/FV922/FV924 system

Figure 5.2 Notes:

1. The NAC circuit shown in the diagram is the active state at terminal 1 and 2 of ABHW-4S.
2. ABHW-4S terminals 5-6 are polarity insensitive. Line 1 and Line 2 can be either line of device loop.
3. The wiring at NAC of FC2025/FC2050/FV2025/FV2050 and FC922/FC924/FV922/FV924 shown in the diagram for ABHW-4S is Style Z (Class A) (no EOL needed). If Style Y (Class B) wiring used at NAC output, EOL (2.4 K, 0.5 W resistor) must be used.
4. For the max load current and max cable resistance, refer to the specifications of FC2025/FC2050/FV2025/FV2050 and FC922/FC924/FV922/FV924.
5. NAC circuit does not provide isolation.

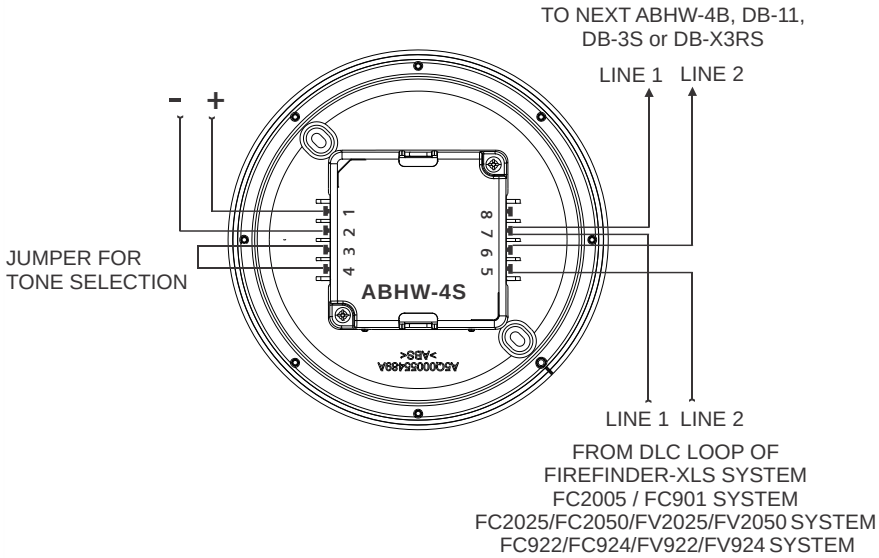

Figure 6

ABHW-4S Audible Base Terminal Blocks (only for HFP-11, HFPT-11, SFP-11, HFPO-11, SFPO-11, and SFPT-11 detectors)

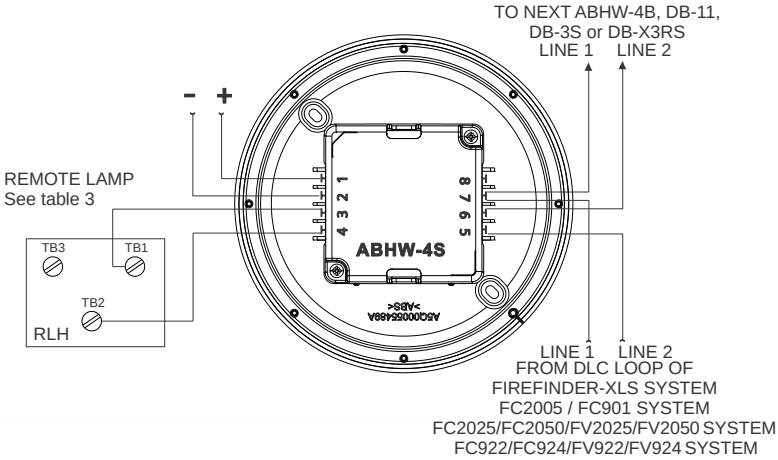

Figure 7
ABHW-4S Audible Base Terminal Blocks (only for FDO421, FDOT421, FDT421, FDOOT441, FDOOTC441, OP921, OH921, HI921, OOH941, HFPO-11, SFPO-11, and OOHC941 detectors.)

Figure 7 Notes:
The ABHW-4S terminal 3 should be connected to RL-HC/RL-HW TB1
The ABHW-4S terminal 4 should be connected to RL-HC/RL-HW TB2 or TB3

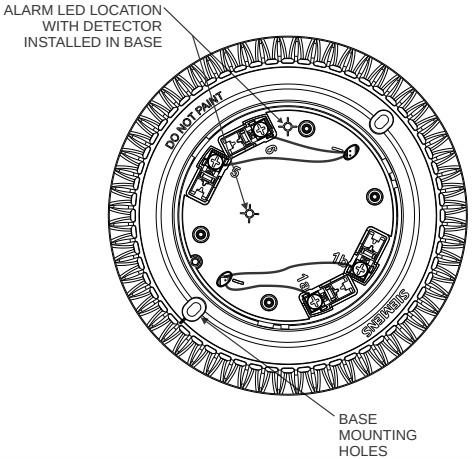

Figure 8
Positioning the Alarm LED

NOTES:

1. When installing FD-UL detectors in a FireFinder-XLS panel, use the following panel versions
    - PMI ver 10.02 or later
    - Zeus ver 10.02 or later
    - DLC ver 06.01 or later
2. ABHW-4S alarm current can ONLY be powered from auxiliary power; device loop power is used for the control circuits in ABHW-4S.
3. When the audible base ABHW-4S works with FD-UL series detectors, up to six tone patterns and two volume levels can be selected by user with system configuration tool.
4. When the audible base ABHW-4S works with H-series detector, a fixed 85dB tone is provided and only two tones can be selected (Steady and Temporal 3). Steady: without a jumper at terminals 3 and 4; Temporal 3: terminals 3 and 4 are shorted with jumper.
5. For additional information on the modules used in an individual system, refer to the Installation Instructions for that particular module or contact your authorized Siemens Industry, Inc. representative.

Cyber security disclaimer

Siemens provides a portfolio of products, solutions, systems and services that includes security functions that support the secure operation of plants, systems, machines and networks. In the field of Building Technologies, this includes building automation and control, fire safety, security management as well as physical security systems.
In order to protect plants, systems, machines and networks against cyber threats, it is necessary to implement – and continuously maintain – a holistic, state-of-the-art security concept. Siemens' portfolio only forms one element of such a concept.
You are responsible for preventing unauthorized access to your plants, systems, machines and networks which should only be connected to an enterprise network or the internet if and to the extent such a connection is necessary and only when appropriate security measures (e.g. firewalls and/or network segmentation) are in place. Additionally, Siemens' guidance on appropriate security measures should be taken into account. For additional information, please contact your Siemens sales representative or visit
https://www.siemens.com/global/en/home/company/topicareas/future-of-manufacturing/industrial-security.html.
Siemens' portfolio undergoes continuous development to make it more secure. Siemens strongly recommends that updates are applied as soon as they are available and that the latest versions are used. Use of versions that are no longer supported, and failure to apply the latest updates may increase your exposure to cyber threats. Siemens strongly recommends to comply with security advisories on the latest security threats, patches and other related measures, published, among others, under
https://www.siemens.com/cert/en/cert-security-advisories.htm.

Siemens Industry, Inc.
Smart Infrastructure
Florham Park, NJ

Siemens Canada, Ltd.
1577 North Service Road East
Oakville, Ontario
L6H 0H6 Canada

Document ID
A6V10405588_en--_d
A5Q00058037
101353601