Overview_Diagram

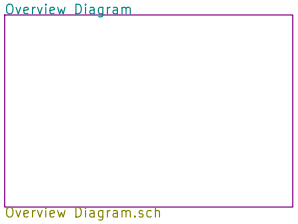

Overview_Diagram.sch

Power

Power.sch

Audio_CODEC

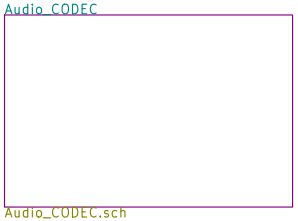

Audio_CODEC.sch

Rear_Pannel

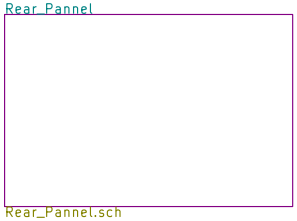

Rear_Pannel.sch

Audio_IN

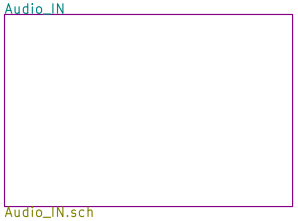

Audio_IN.sch

HMI_Communication

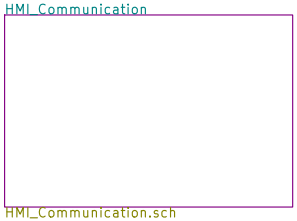

HMI_Communication.sch

Audio_OUT

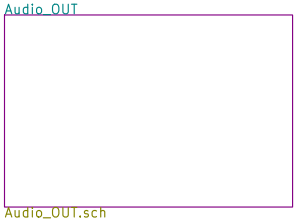

Audio_OUT.sch

HOST_Connectors

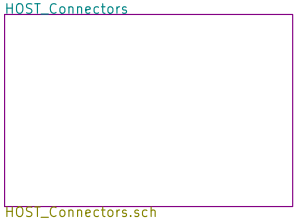

HOST_Connectors.sch

Audio_HEADPHONES

Audio_HEADPHONES.sch

MOD – Musical Operating Devices <http://portalmod.com/>

Sheet: /
File: Duo_BottomBoard_RC1A.sch

Title: MOD Duo BottomBoard

Size: A4	Date: December/2014	**Rev: RC2 (wip)**
KiCad E.D.A. kicad (2014-jul-16 BZR unknown)-product		Id: 1/10

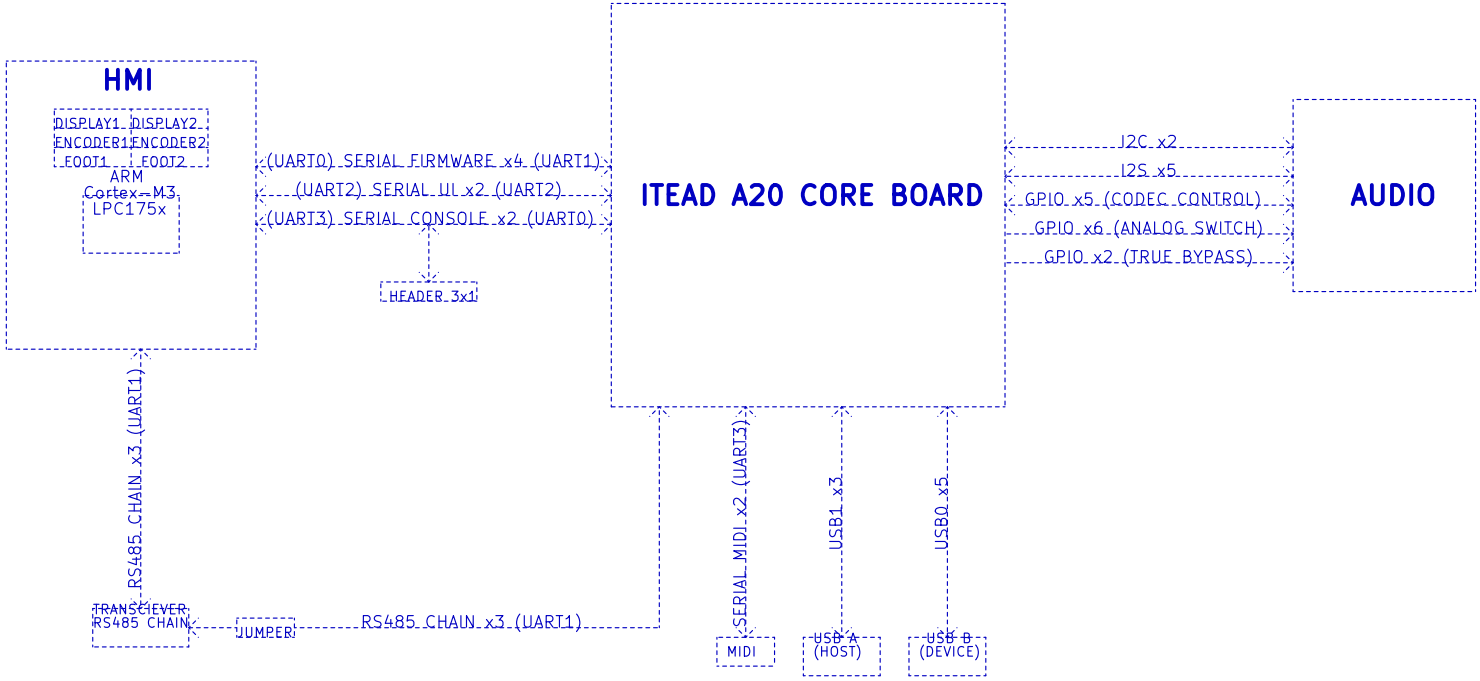

MOD – Musical Operating Devices <http://portalmod.com/>

Sheet: /Overview Diagram/
File: Overview Diagram.sch

Title: MOD Duo BottomBoard

Size: A4	Date: December/2014	**Rev: RC2 (wip)**
KiCad E.D.A. kicad (2014-jul-16 BZR unknown)-product		Id: 2/10

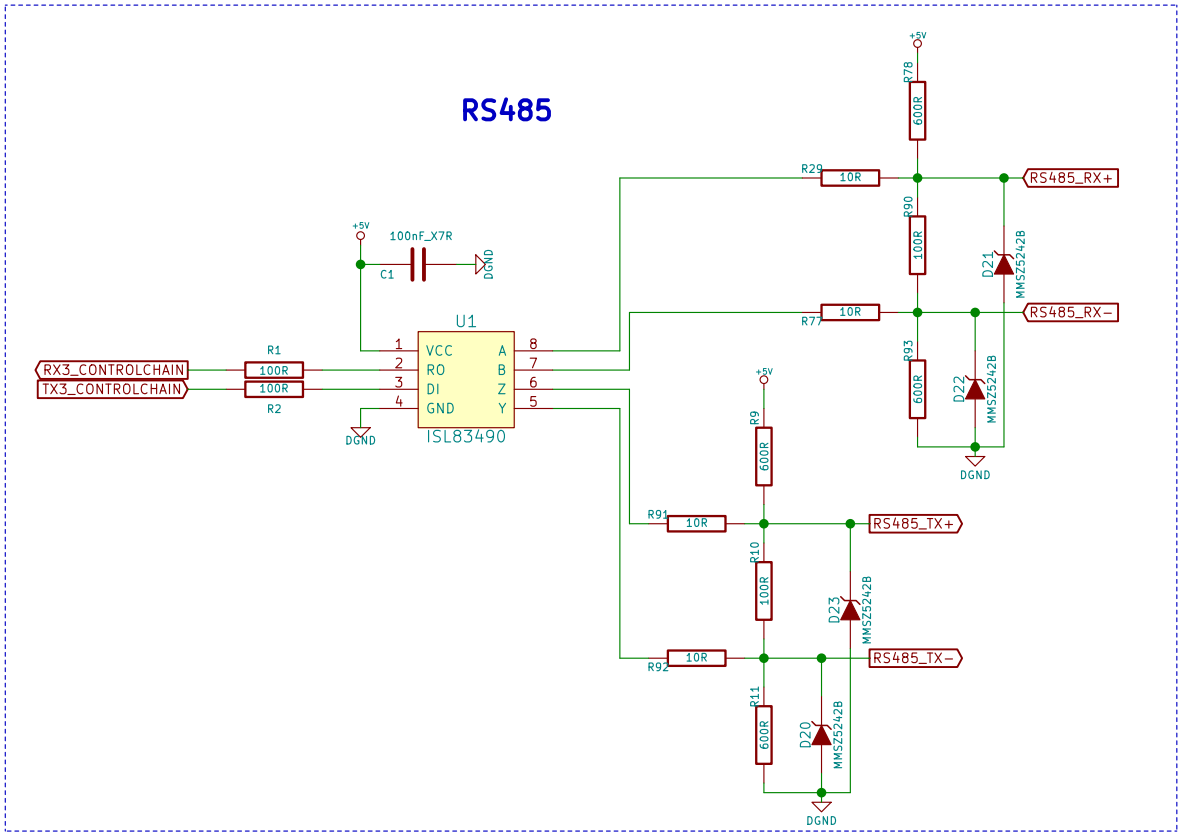

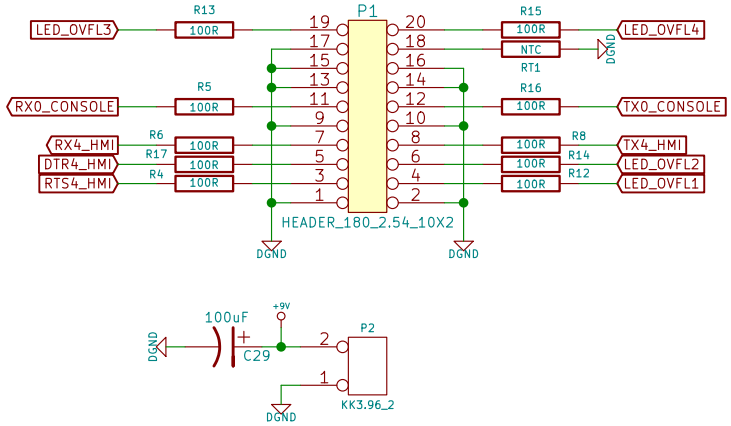

MOD – Musical Operating Devices <http://portalmod.com/>

Sheet: /HMI_Communication/
File: HMI_Communication.sch

Title: MOD Duo BottomBoard

Size: A4	Date: December/2014	**Rev: RC2 (wip)**
KiCad E.D.A. kicad (2014-jul-16 BZR unknown)-product		Id: 3/10

DIGITAL POWER

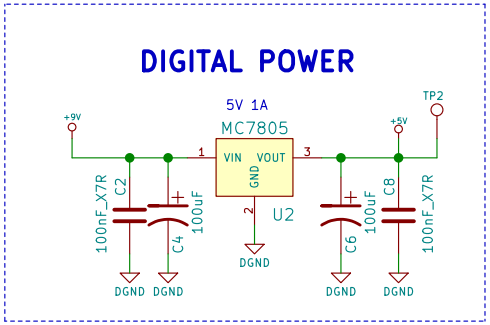

AUDIO POWER

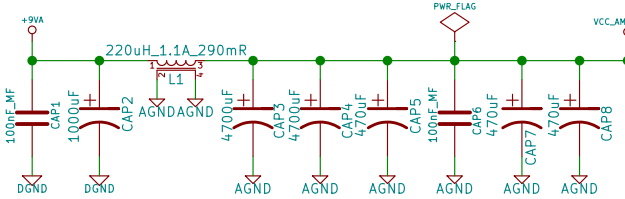

CODEC ANALOG POWER

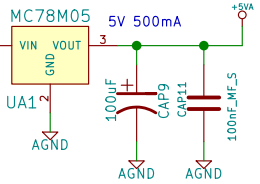

CODEC DIGITAL POWER

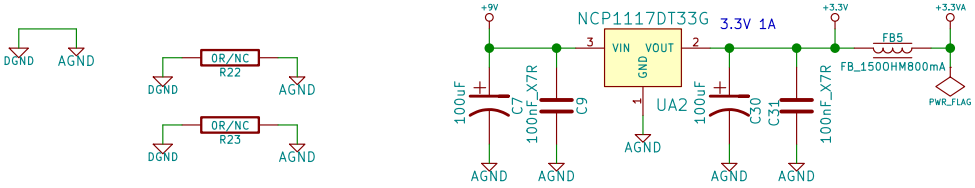

MOD – Musical Operating Devices <http://portalmod.com/>		
Sheet: /Power/ File: Power.sch		
Title: MOD Duo BottomBoard		
Size: A4	Date: December/2014	**Rev: RC2 (wip)**
KiCad E.D.A. kicad (2014-jul-16 BZR unknown)-product		Id: 4/10

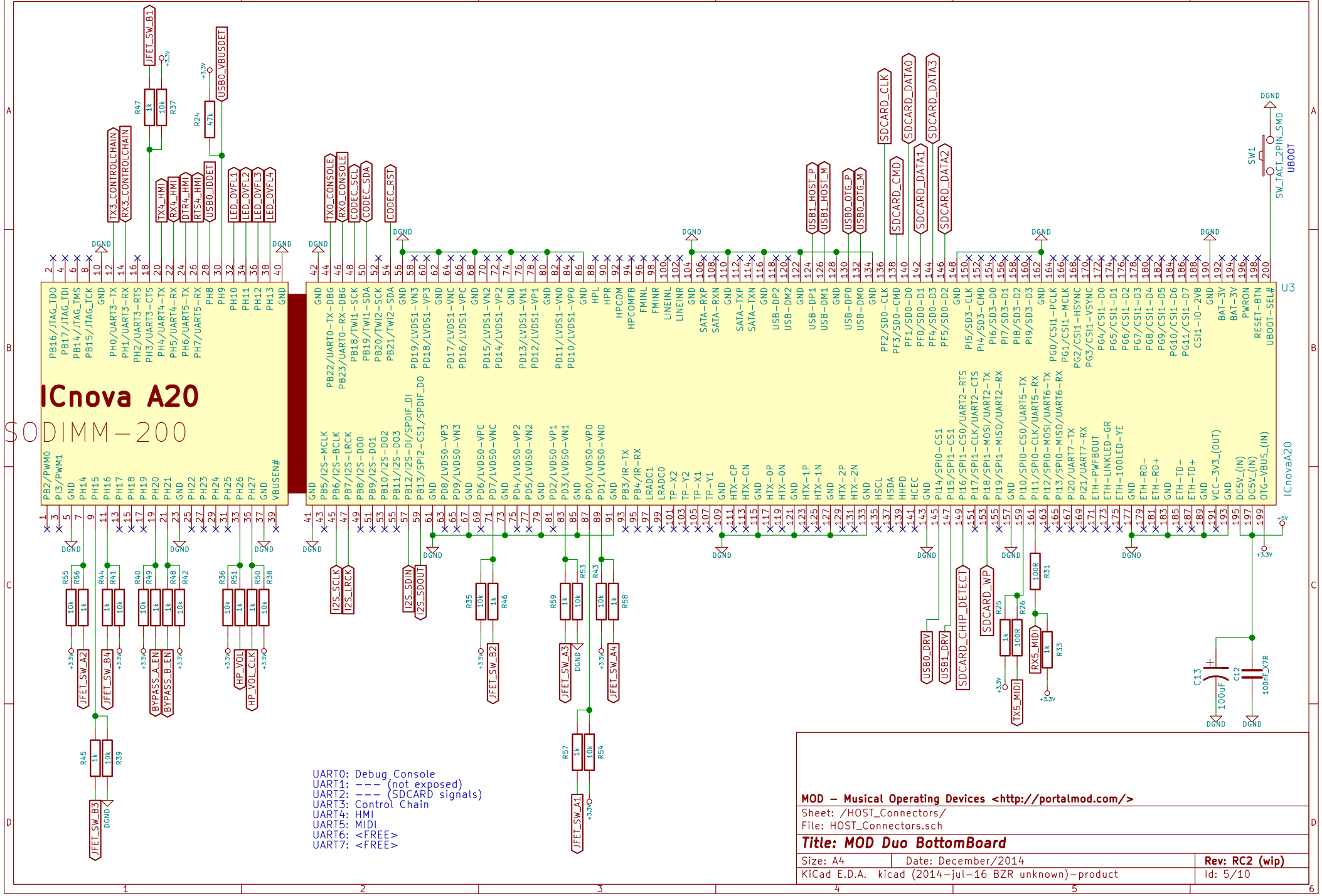
ICnova A20
SODIMM-200
UART0: Debug Console
UART1: --- (not exposed)
UART2: --- (SDCARD signals)
UART3: Control Chain
UART4: HMI
UART5: MIDI
UART6: <FREE>
UART7: <FREE>
MOD - Musical Operating Devices <http://portalmod.com/>
Sheet: /HOST_Connectors/
File: HOST_Connectors.sch
Title: MOD Duo BottomBoard
Size: A4
Date: December/2014
Rev: RC2 (wip)
KiCad E.D.A. kicad (2014-jul-16 BZR unknown)-product
Id: 5/10

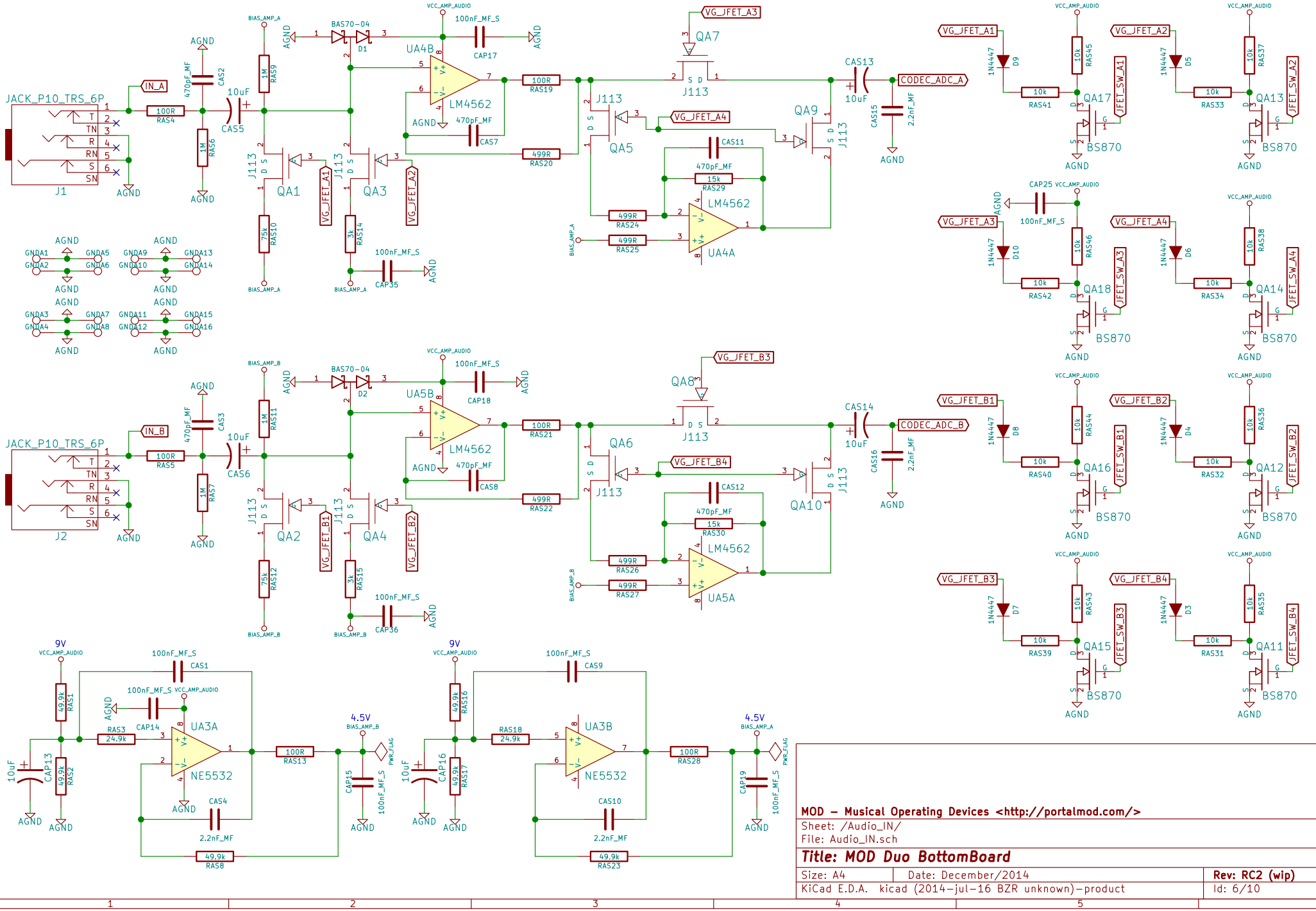
JACK_P10_TRS_6P
J1
J2
IN_A
IN_B
CODEC_ADC_A
CODEC_ADC_B
VG_JFET_A1
VG_JFET_A2
VG_JFET_A3
VG_JFET_A4
VG_JFET_B1
VG_JFET_B2
VG_JFET_B3
VG_JFET_B4
JFET_SW_A1
JFET_SW_A2
JFET_SW_A3
JFET_SW_A4
JFET_SW_B1
JFET_SW_B2
JFET_SW_B3
JFET_SW_B4
BIAS_AMP_A
BIAS_AMP_B
VCC_AMP_AUDIO
AGND
9V
4.5V
PWR_FLAG
LM4562
NE5532
UA4B
UA4A
UA5B
UA5A
UA3A
UA3B
QA1
QA2
QA3
QA4
QA5
QA6
QA7
QA8
QA9
QA10
QA11
QA12
QA13
QA14
QA15
QA16
QA17
QA18
BS870
J113
BAS70-04
D1
D2
D3
D4
D5
D6
D7
D8
D9
D10
1N4447
100nF_MF_S
470pF_MF
10uF
2.2nF_MF
100R
RAS4
RAS5
RAS6
RAS7
RAS8
RAS9
RAS10
RAS11
RAS12
RAS13
RAS14
RAS15
RAS16
RAS17
RAS18
RAS19
RAS20
RAS21
RAS22
RAS23
RAS24
RAS25
RAS26
RAS27
RAS28
RAS29
RAS30
RAS31
RAS32
RAS33
RAS34
RAS35
RAS36
RAS37
RAS38
RAS39
RAS40
RAS41
RAS42
RAS43
RAS44
RAS45
RAS46
RAS51
RAS52
RAS53
CAS1
CAS2
CAS3
CAS4
CAS5
CAS6
CAS7
CAS8
CAS9
CAS10
CAS11
CAS12
CAS13
CAS14
CAS15
CAS16
CAP13
CAP14
CAP15
CAP16
CAP17
CAP18
CAP19
CAP25
CAP35
CAP36
GNDA1
GNDA2
GNDA3
GNDA4
GNDA5
GNDA6
GNDA7
GNDA8
GNDA9
GNDA10
GNDA11
GNDA12
GNDA13
GNDA14
GNDA15
GNDA16
MOD – Musical Operating Devices <http://portalmod.com/>
Sheet: /Audio_IN/
File: Audio_IN.sch
Title: MOD Duo BottomBoard
Size: A4
Date: December/2014
Rev: RC2 (wip)
KiCad E.D.A. kicad (2014-jul-16 BZR unknown)-product
Id: 6/10

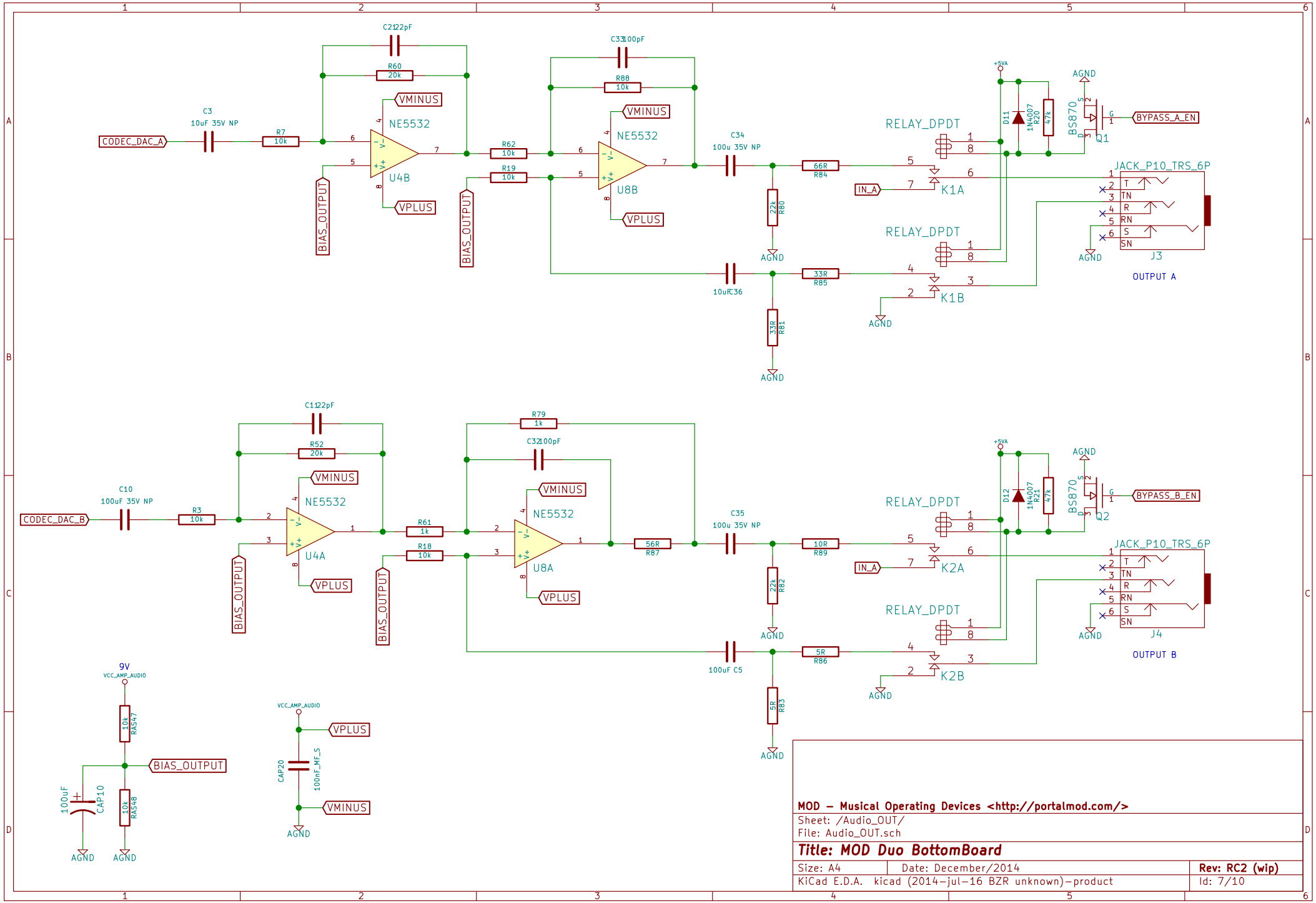
CODEC_DAC_A
C3
10uF 35V NP
R7
10k
C2
22pF
R60
20k
VMINUS
NE5532
U4B
VPLUS
BIAS_OUTPUT
R62
10k
R19
10k
C33
100pF
R88
10k
U8B
C34
100u 35V NP
22k
R80
33R
R81
10uF C36
33R
R85
66R
R84
RELAY_DPDT
K1A
K1B
IN_A
+5VA
D11
1N4007
R20
47k
BS870
Q1
BYPASS_A_EN
JACK_P10_TRS_6P
J3
OUTPUT A
CODEC_DAC_B
C10
100uF 35V NP
R3
10k
C1
22pF
R52
20k
U4A
R61
1k
R18
10k
R79
1k
C32
100pF
U8A
C35
100u 35V NP
56R
R87
22k
R82
5R
R83
100uF C5
10R
R89
5R
R86
D12
1N4007
R21
47k
Q2
BYPASS_B_EN
J4
OUTPUT B
9V
VCC_AMP_AUDIO
10k
RAS47
10k
RAS48
100uF
CAP10
CAP20
100nF_MF_S
AGND
MOD – Musical Operating Devices <http://portalmod.com/>
Sheet: /Audio_OUT/
File: Audio_OUT.sch
Title: MOD Duo BottomBoard
Size: A4
Date: December/2014
Rev: RC2 (wip)
KiCad E.D.A. kicad (2014-jul-16 BZR unknown)-product
Id: 7/10

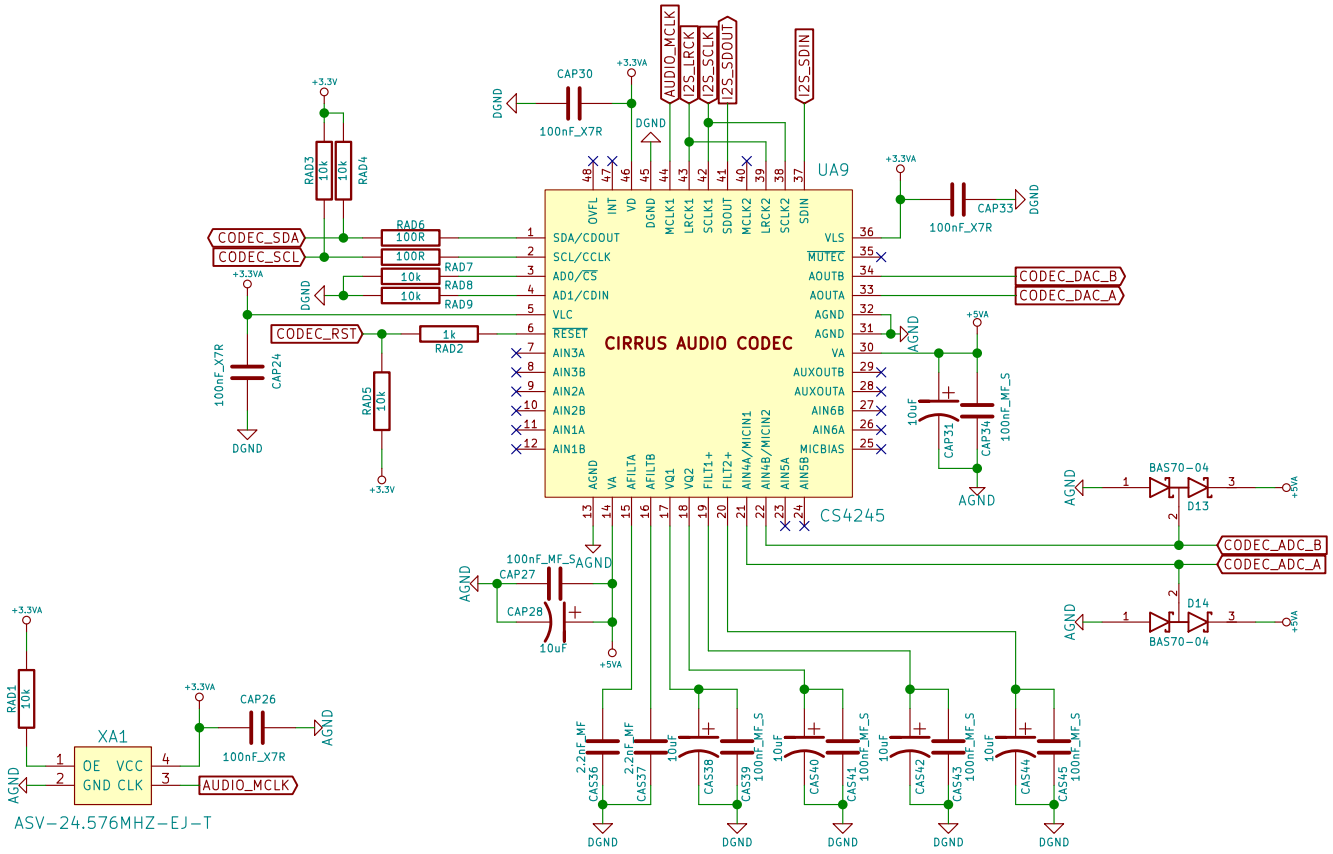

MOD – Musical Operating Devices <http://portalmod.com/>

Sheet: /Audio_CODEC/
File: Audio_CODEC.sch

Title: MOD Duo BottomBoard

Size: A4	Date: December/2014	**Rev: RC2 (wip)**
KiCad E.D.A. kicad (2014-jul-16 BZR unknown)-product		Id: 8/10

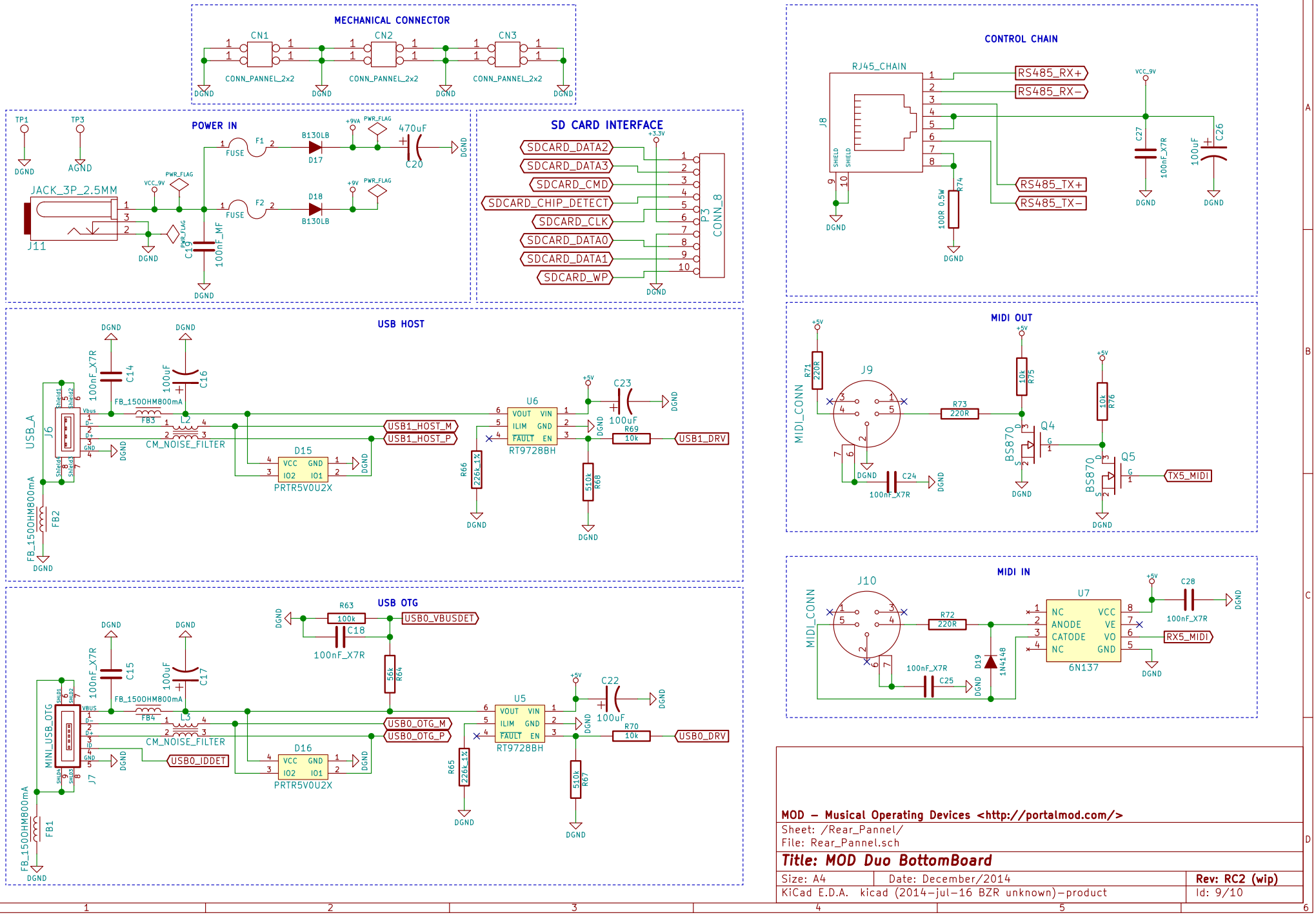

MOD – Musical Operating Devices <http://portalmod.com/>

Sheet: /Rear_Pannel/
File: Rear_Pannel.sch

Title: *MOD Duo BottomBoard*

Size: A4	Date: December/2014	**Rev: RC2 (wip)**
KiCad E.D.A. kicad (2014-jul-16 BZR unknown)-product		Id: 9/10

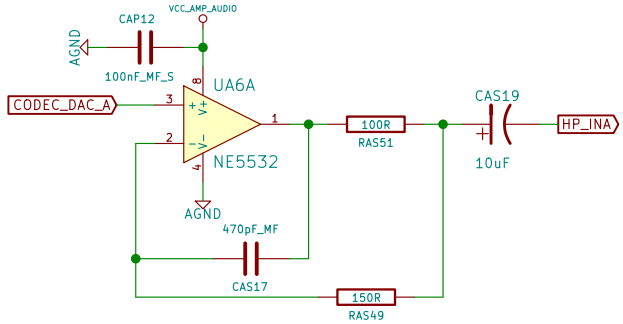

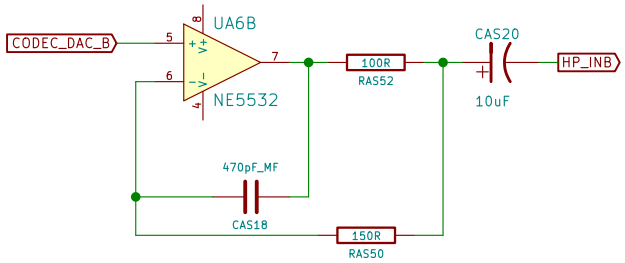

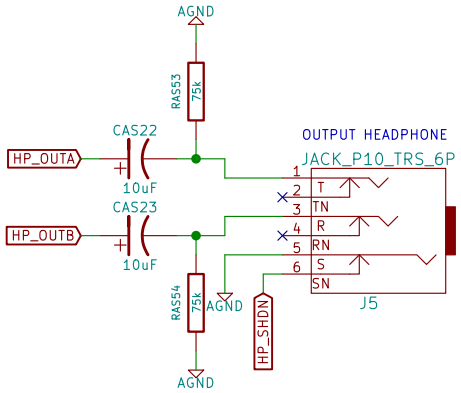

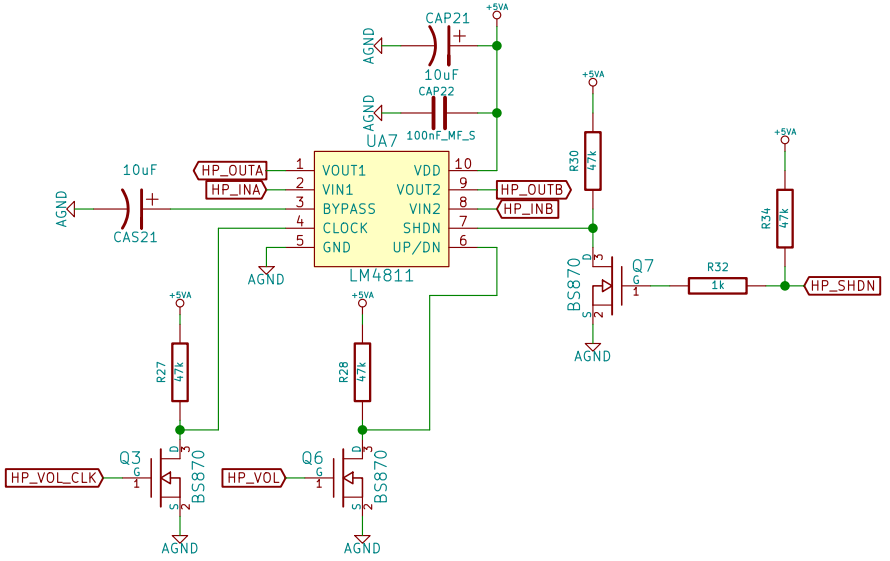

Sheet: /Audio _HEADPHONES/
File: Audio_HEADPHONES.sch

Title:

Size: A4	Date:	**Rev:**
KiCad E.D.A. kicad (2014-jul-16 BZR unknown)-product		Id: 10/10