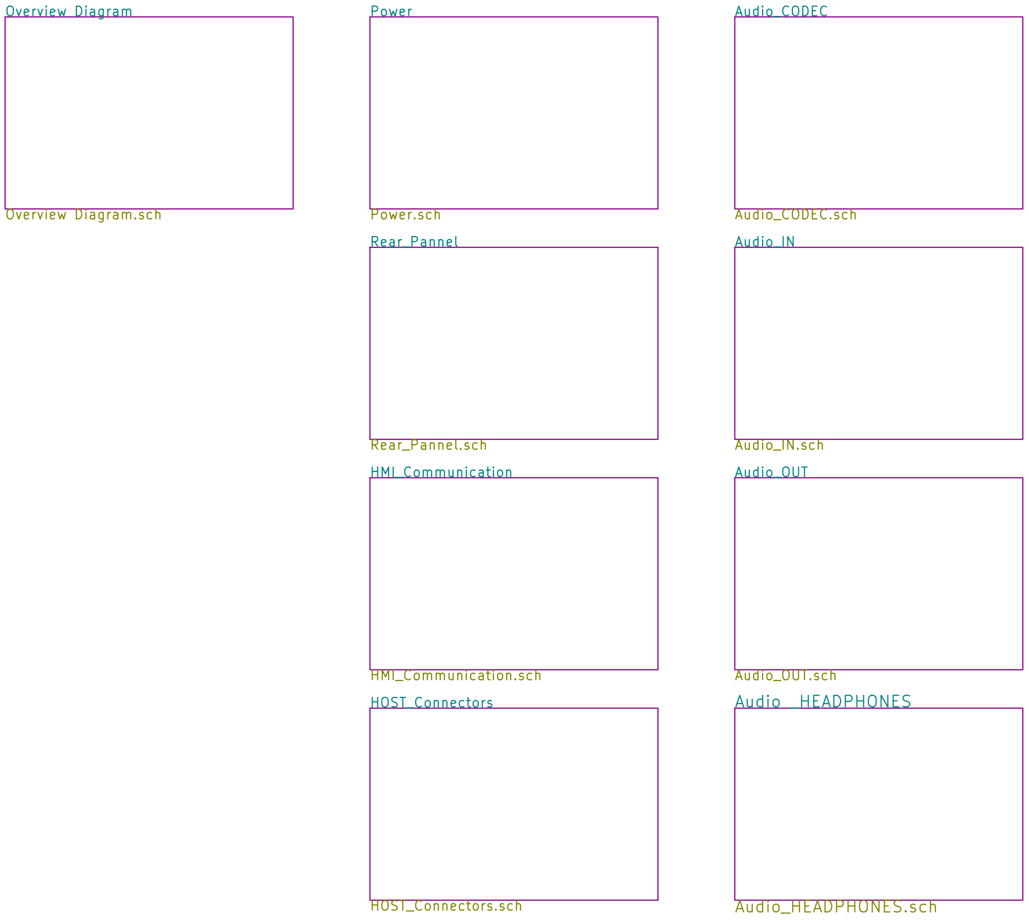
Overview Diagram
Overview Diagram.sch
Power
Power.sch
Audio CODEC
Audio_CODEC.sch
Rear Pannel
Rear_Pannel.sch
Audio IN
Audio_IN.sch
HMI Communication
HMI_Communication.sch
Audio OUT
Audio_OUT.sch
HOST Connectors
HOST_Connectors.sch
Audio HEADPHONES
Audio_HEADPHONES.sch

MOD – Musical Operating Devices <http://portalmod.com/>
Sheet: /
File: Duo_BottomBoard_RC1A.sch

Title: MOD Duo BottomBoard

Size: A4	Date: December/2014	**Rev: RC2 (wip)**
KiCad E.D.A. kicad (2014–jul–16 BZR unknown)–product		Id: 1/10

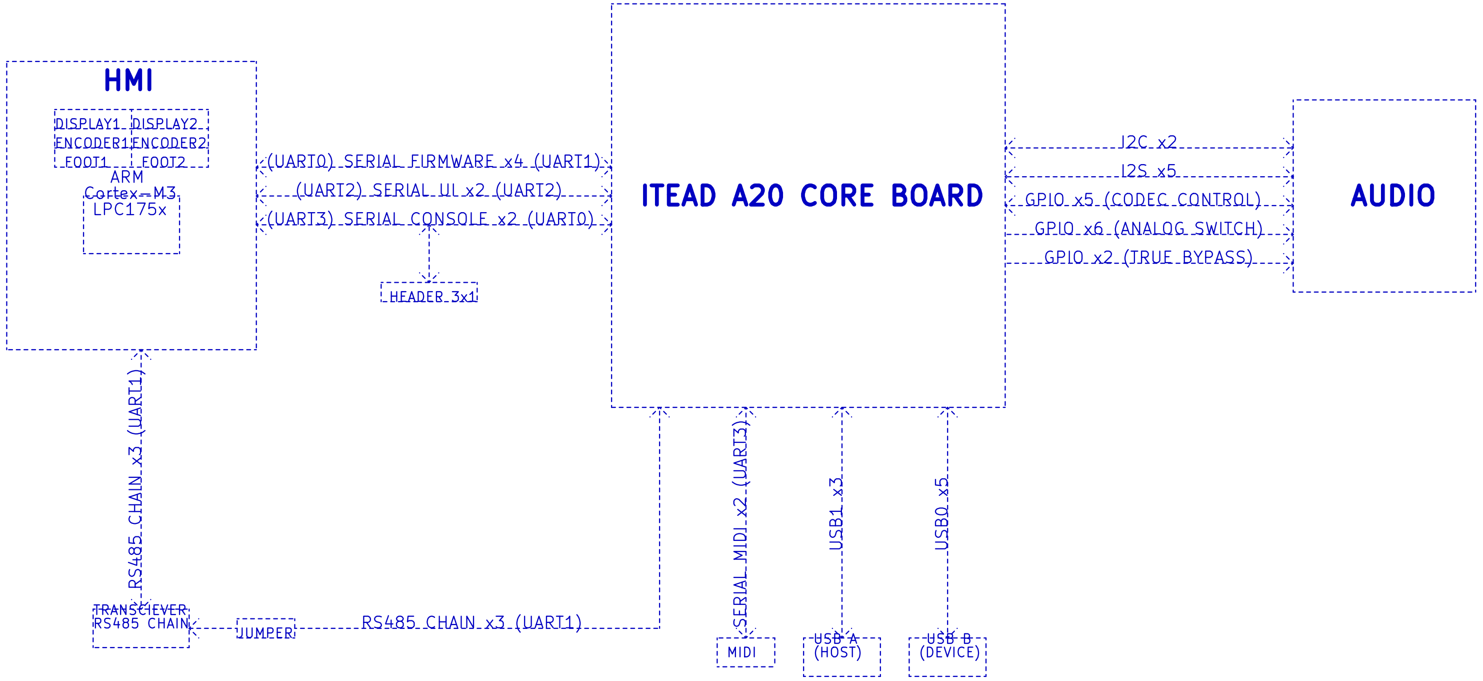
HMI
DISPLAY1
ENCODER1
FOOT1
DISPLAY2
ENCODER2
FOOT2
ARM
Cortex-M3
LPC175x
(UART0) SERIAL FIRMWARE x4 (UART1)
(UART2) SERIAL UI x2 (UART2)
(UART3) SERIAL CONSOLE x2 (UART0)
HEADER 3x1
ITEAD A20 CORE BOARD
I2C x2
I2S x5
GPIO x5 (CODEC CONTROL)
GPIO x6 (ANALOG SWITCH)
GPIO x2 (TRUE BYPASS)
AUDIO
RS485 CHAIN x3 (UART1)
TRANSCIEVER
RS485 CHAIN
JUMPER
RS485 CHAIN x3 (UART1)
SERIAL MIDI x2 (UART3)
MIDI
USB1 x3
USB A
(HOST)
USB0 x5
USB B
(DEVICE)

MOD – Musical Operating Devices <http://portalmod.com/>
Sheet: /Overview Diagram/
File: Overview Diagram.sch

Title: MOD Duo BottomBoard

Size: A4 Date: December/2014 **Rev: RC2 (wip)**
KiCad E.D.A. kicad (2014-jul-16 BZR unknown)-product Id: 2/10

RS485

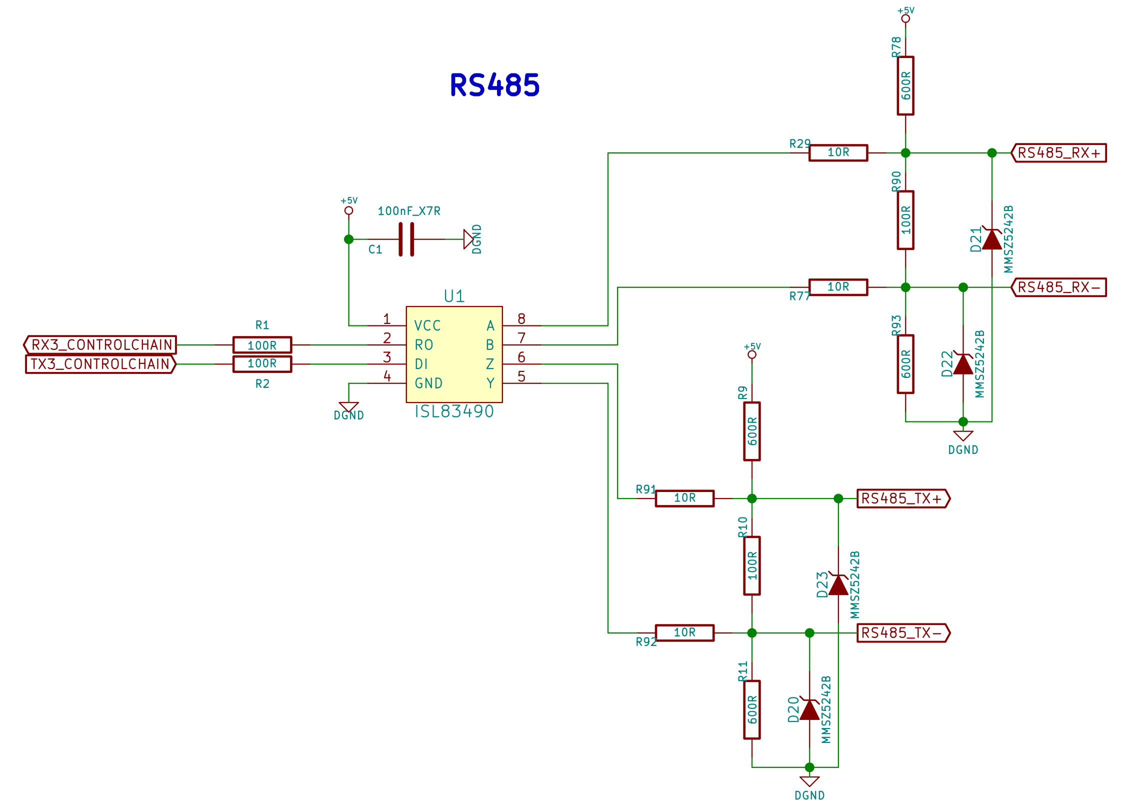
+5V
R78
600R
R29
10R
RS485_RX+
R90
100R
D21
MMSZ5242B
R77
10R
RS485_RX−
R93
600R
D22
MMSZ5242B
DGND
+5V
100nF_X7R
C1
DGND
U1
RX3_CONTROLCHAIN
TX3_CONTROLCHAIN
R1
100R
R2
100R
1
2
3
4
VCC
RO
DI
GND
A
B
Z
Y
8
7
6
5
ISL83490
DGND
+5V
R9
600R
R91
10R
RS485_TX+
R10
100R
D23
MMSZ5242B
R92
10R
RS485_TX−
R11
600R
D20
MMSZ5242B
DGND

HMI BOARD CONNECTOR

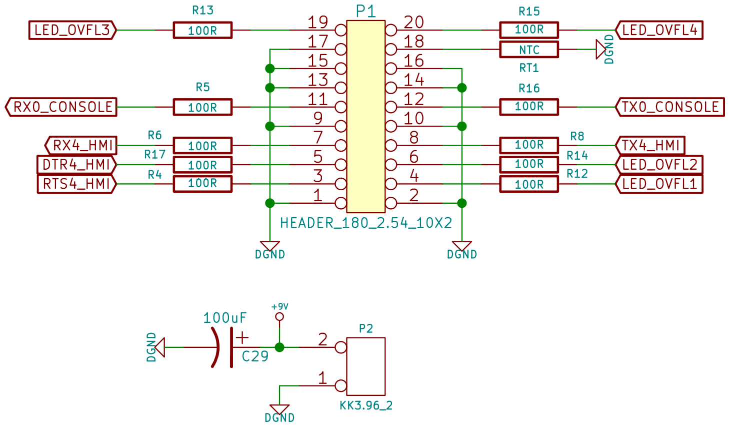
P1
LED_OVFL3
R13
100R
RX0_CONSOLE
R5
100R
RX4_HMI
R6
100R
DTR4_HMI
R17
100R
RTS4_HMI
R4
100R
19
17
15
13
11
9
7
5
3
1
20
18
16
14
12
10
8
6
4
2
R15
100R
LED_OVFL4
NTC
RT1
DGND
R16
100R
TX0_CONSOLE
100R
R8
TX4_HMI
100R
R14
LED_OVFL2
100R
R12
LED_OVFL1
HEADER_180_2.54_10X2
DGND
DGND
100uF
+
C29
DGND
+9V
P2
2
1
KK3.96_2
DGND

MOD – Musical Operating Devices <http://portalmod.com/>

Sheet: /HMI_Communication/
File: HMI_Communication.sch

Title: MOD Duo BottomBoard

Size: A4	Date: December/2014	**Rev: RC2 (wip)**
KiCad E.D.A. kicad (2014-jul-16 BZR unknown)-product		Id: 3/10

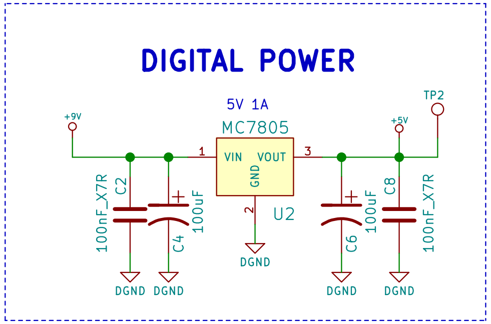
DIGITAL POWER
+9V
5V 1A
MC7805
VIN VOUT
GND
U2
1
2
3
+5V
TP2
C2
100nF_X7R
C4
100uF
C6
100uF
C8
100nF_X7R
DGND
DGND
DGND
DGND
DGND

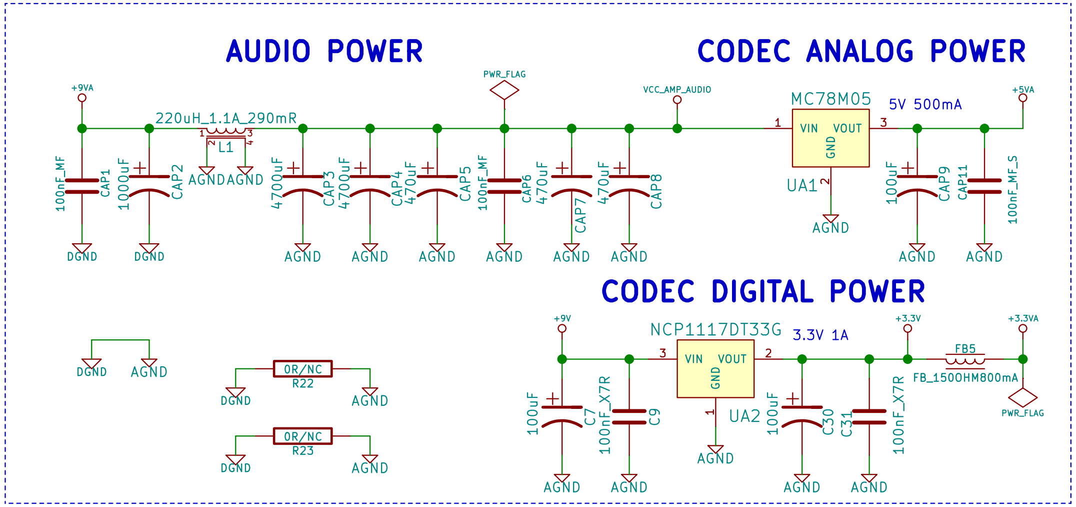
AUDIO POWER
CODEC ANALOG POWER
+9VA
220uH_1.1A_290mR
L1
1
2
3
4
AGND
AGND
PWR_FLAG
VCC_AMP_AUDIO
100nF_MF
CAP1
1000uF
CAP2
4700uF
CAP3
4700uF
CAP4
470uF
CAP5
100nF_MF
CAP6
470uF
CAP7
470uF
CAP8
DGND
DGND
AGND
AGND
AGND
AGND
AGND
AGND
MC78M05
5V 500mA
VIN VOUT
GND
UA1
1
2
3
+5VA
100uF
CAP9
CAP11
100nF_MF_S
AGND
AGND
AGND
CODEC DIGITAL POWER
+9V
NCP1117DT33G
3.3V 1A
VIN VOUT
GND
UA2
3
2
1
+3.3V
+3.3VA
FB5
FB_150OHM800mA
PWR_FLAG
100uF
C7
100nF_X7R
C9
100uF
C30
C31
100nF_X7R
AGND
AGND
AGND
AGND
AGND
DGND
AGND
0R/NC
R22
DGND
AGND
0R/NC
R23
DGND
AGND

MOD – Musical Operating Devices <http://portalmod.com/>

Sheet: /Power/
File: Power.sch

Title: MOD Duo BottomBoard

Size: A4	Date: December/2014	**Rev: RC2 (wip)**
KiCad E.D.A. kicad (2014-jul-16 BZR unknown)-product		Id: 4/10

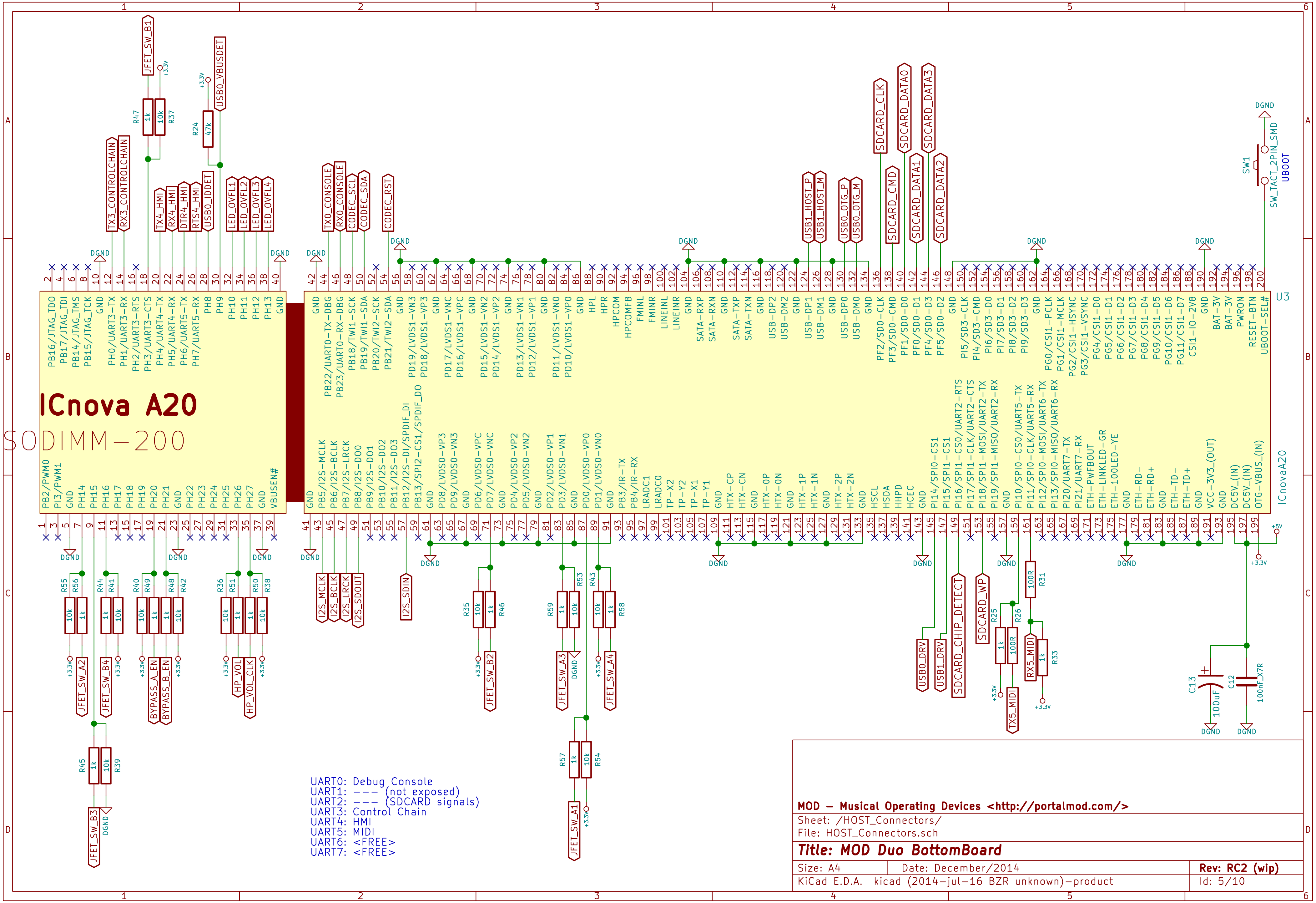
ICnova A20
SODIMM-200
U3
ICnovaA20
JFET_SW_B1
USB0_VBUSDET
TX3_CONTROLCHAIN
RX3_CONTROLCHAIN
TX4_HMI
RX4_HMI
DTR4_HMI
RTS4_HMI
USB0_IDDET
LED_OVFL1
LED_OVFL2
LED_OVFL3
LED_OVFL4
TX0_CONSOLE
RX0_CONSOLE
CODEC_SCL
CODEC_SDA
CODEC_RST
USB1_HOST_P
USB1_HOST_M
USB0_OTG_P
USB0_OTG_M
SDCARD_CLK
SDCARD_CMD
SDCARD_DATA0
SDCARD_DATA1
SDCARD_DATA3
SDCARD_DATA2
SW1
SW_TACT_2PIN_SMD
UBOOT
DGND
+3.3V
+5V
PB16/JTAG_TDO
PB17/JTAG_TDI
PB14/JTAG_TMS
PB15/JTAG_TCK
GND
PH0/UART3-TX
PH1/UART3-RX
PH2/UART3-RTS
PH3/UART3-CTS
PH4/UART4-TX
PH5/UART4-RX
PH6/UART5-TX
PH7/UART5-RX
PH8
PH9
PH10
PH11
PH12
PH13
PB22/UART0-TX-DBG
PB23/UART0-RX-DBG
PB18/TWI1-SCK
PB19/TWI1-SDA
PB20/TWI2-SCK
PB21/TWI2-SDA
PD19/LVDS1-VN3
PD18/LVDS1-VP3
PD17/LVDS1-VNC
PD16/LVDS1-VPC
PD15/LVDS1-VN2
PD14/LVDS1-VP2
PD13/LVDS1-VN1
PD12/LVDS1-VP1
PD11/LVDS1-VN0
PD10/LVDS1-VP0
HPL
HPR
HPCOM
HPCOMFB
FMINL
FMINR
LINEINL
LINEINR
SATA-RXP
SATA-RXN
SATA-TXP
SATA-TXN
USB-DP2
USB-DM2
USB-DP1
USB-DM1
USB-DP0
USB-DM0
PF2/SD0-CLK
PF3/SD0-CMD
PF1/SD0-D0
PF0/SD0-D1
PF4/SD0-D3
PF5/SD0-D2
PI5/SD3-CLK
PI4/SD3-CMD
PI6/SD3-D0
PI7/SD3-D1
PI8/SD3-D2
PI9/SD3-D3
PG0/CSI1-PCLK
PG1/CSI1-MCLK
PG2/CSI1-HSYNC
PG3/CSI1-VSYNC
PG4/CSI1-D0
PG5/CSI1-D1
PG6/CSI1-D2
PG7/CSI1-D3
PG8/CSI1-D4
PG9/CSI1-D5
PG10/CSI1-D6
PG11/CSI1-D7
CSI1-IO-2V8
BAT-3V
PWRON
RESET-BTN
UBOOT-SEL#
PB2/PWM0
PI3/PWM1
PH14
PH15
PH16
PH17
PH18
PH19
PH20
PH21
PH22
PH23
PH24
PH25
PH26
PH27
VBUSEN#
PB5/I2S-MCLK
PB6/I2S-BCLK
PB7/I2S-LRCK
PB8/I2S-DO0
PB9/I2S-DO1
PB10/I2S-DO2
PB11/I2S-DO3
PB12/I2S-DI/SPDIF_DI
PB13/SPI2-CS1/SPDIF_DO
PD8/LVDS0-VP3
PD9/LVDS0-VN3
PD6/LVDS0-VPC
PD7/LVDS0-VNC
PD4/LVDS0-VP2
PD5/LVDS0-VN2
PD2/LVDS0-VP1
PD3/LVDS0-VN1
PD0/LVDS0-VP0
PD1/LVDS0-VN0
PB3/IR-TX
PB4/IR-RX
LRADC1
LRADC0
TP-X2
TP-Y2
TP-X1
TP-Y1
HTX-CP
HTX-CN
HTX-0P
HTX-0N
HTX-1P
HTX-1N
HTX-2P
HTX-2N
HSCL
HSDA
HHPD
HCEC
PI14/SPI0-CS1
PI15/SPI1-CS1
PI16/SPI1-CS0/UART2-RTS
PI17/SPI1-CLK/UART2-CTS
PI18/SPI1-MOSI/UART2-TX
PI19/SPI1-MISO/UART2-RX
PI10/SPI0-CS0/UART5-TX
PI11/SPI0-CLK/UART5-RX
PI12/SPI0-MOSI/UART6-TX
PI13/SPI0-MISO/UART6-RX
PI20/UART7-TX
PI21/UART7-RX
ETH-PWFBOUT
ETH-LINKLED-GR
ETH-100LED-YE
ETH-RD-
ETH-RD+
ETH-TD-
ETH-TD+
VCC-3V3_(OUT)
DC5V_(IN)
OTG-VBUS_(IN)
R47 1k
R37 10k
R24 47k
R55 10k
R56 1k
R44 1k
R41 10k
R40 10k
R49 1k
R48 1k
R42 10k
R36 10k
R51 1k
R50 1k
R38 10k
R35 10k
R46 1k
R59 1k
R53 10k
R43 10k
R58 1k
R45 1k
R39 10k
R57 1k
R54 10k
R25 1k
R26 100R
R31 100R
R33 1k
C13 100uF
C12 100nF_X7R
JFET_SW_A2
JFET_SW_B4
BYPASS_A_EN
BYPASS_B_EN
HP_VOL
HP_VOL_CLK
I2S_MCLK
I2S_BCLK
I2S_LRCK
I2S_SDOUT
I2S_SDIN
JFET_SW_B2
JFET_SW_A3
JFET_SW_A4
JFET_SW_B3
JFET_SW_A1
USB0_DRV
USB1_DRV
SDCARD_CHIP_DETECT
SDCARD_WP
RX5_MIDI
TX5_MIDI

UART0: Debug Console
UART1: --- (not exposed)
UART2: --- (SDCARD signals)
UART3: Control Chain
UART4: HMI
UART5: MIDI
UART6: <FREE>
UART7: <FREE>

MOD - Musical Operating Devices <http://portalmod.com/>
Sheet: /HOST_Connectors/
File: HOST_Connectors.sch

Title: MOD Duo BottomBoard

Size: A4	Date: December/2014	**Rev: RC2 (wip)**
KiCad E.D.A.	kicad (2014-jul-16 BZR unknown)-product	Id: 5/10

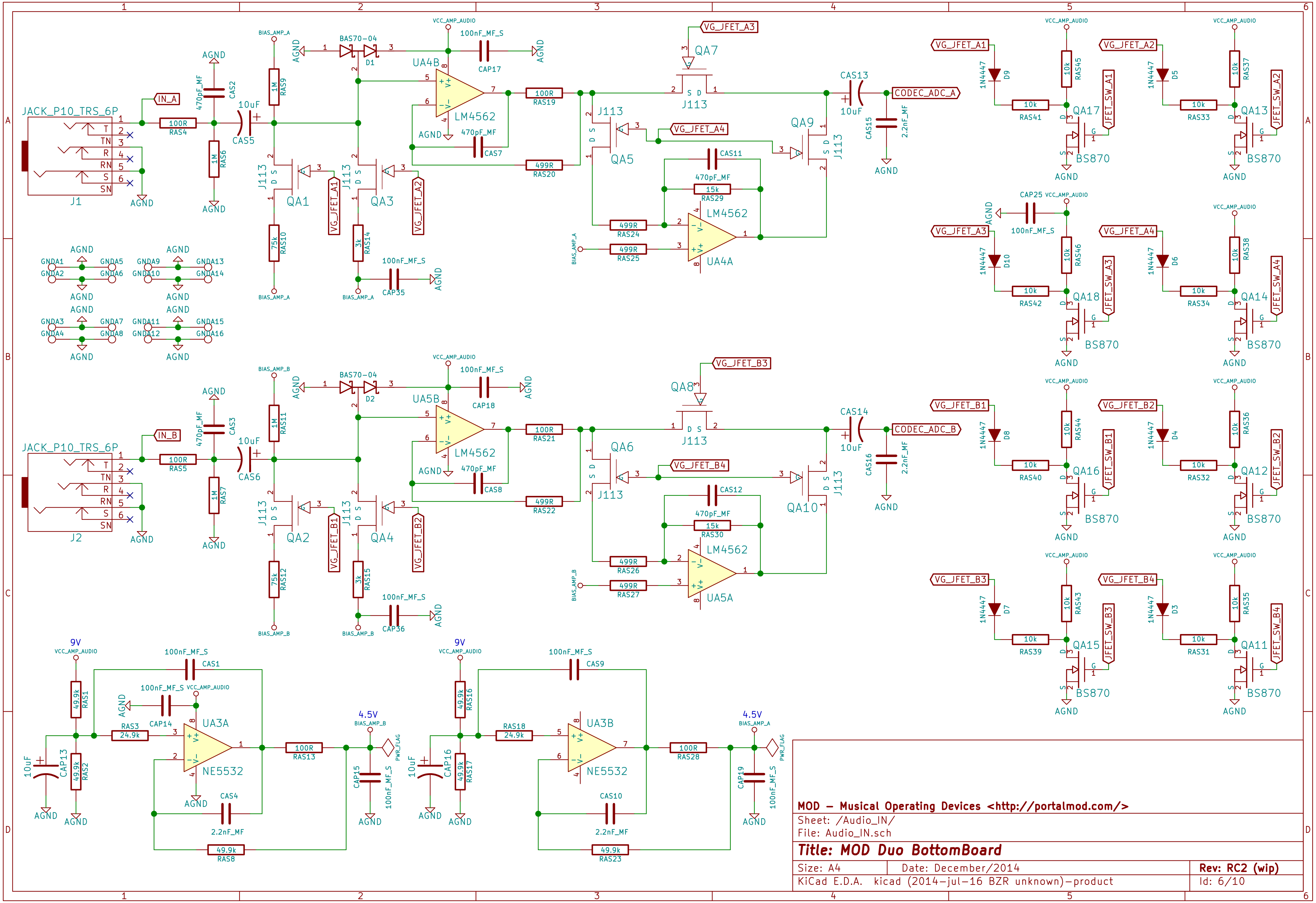
1
2
3
4
5
6
A
B
C
D
JACK_P10_TRS_6P
T
TN
R
RN
S
SN
J1
J2
IN_A
IN_B
100R
RAS4
RAS5
470pF_MF
CAS2
CAS3
1M
RAS6
RAS7
10uF
CAS5
CAS6
AGND
BIAS_AMP_A
BIAS_AMP_B
RAS9
RAS11
75k
RAS10
RAS12
J113
QA1
QA2
QA3
QA4
3k
RAS14
RAS15
VG_JFET_A1
VG_JFET_A2
VG_JFET_B1
VG_JFET_B2
BAS70-04
D1
D2
VCC_AMP_AUDIO
100nF_MF_S
CAP17
CAP18
CAP35
CAP36
UA4B
UA5B
LM4562
CAS7
CAS8
RAS19
RAS21
499R
RAS20
RAS22
VG_JFET_A3
VG_JFET_B3
QA7
QA8
S D
J113
QA5
QA6
VG_JFET_A4
VG_JFET_B4
QA9
QA10
CAS11
CAS12
15k
RAS29
RAS30
RAS24
RAS25
RAS26
RAS27
UA4A
UA5A
CAS13
CAS14
CODEC_ADC_A
CODEC_ADC_B
CAS15
CAS16
2.2nF_MF
GNDA1
GNDA2
GNDA3
GNDA4
GNDA5
GNDA6
GNDA7
GNDA8
GNDA9
GNDA10
GNDA11
GNDA12
GNDA13
GNDA14
GNDA15
GNDA16
1N4447
D3
D4
D5
D6
D7
D8
D9
D10
10k
RAS31
RAS32
RAS33
RAS34
RAS35
RAS36
RAS37
RAS38
RAS39
RAS40
RAS41
RAS42
RAS43
RAS44
RAS45
RAS46
QA11
QA12
QA13
QA14
QA15
QA16
QA17
QA18
BS870
JFET_SW_A1
JFET_SW_A2
JFET_SW_A3
JFET_SW_A4
JFET_SW_B1
JFET_SW_B2
JFET_SW_B3
JFET_SW_B4
CAP25
9V
49.9k
RAS1
RAS2
RAS16
RAS17
CAS1
CAS9
CAP14
24.9k
RAS3
RAS18
UA3A
UA3B
NE5532
10uF
CAP13
CAP16
CAS4
CAS10
RAS8
RAS23
RAS13
RAS28
4.5V
PWR_FLAG
CAP15
CAP19

MOD – Musical Operating Devices <http://portalmod.com/>

Sheet: /Audio_IN/
File: Audio_IN.sch

Title: MOD Duo BottomBoard

Size: A4
Date: December/2014
Rev: RC2 (wip)
KiCad E.D.A. kicad (2014-jul-16 BZR unknown)-product
Id: 6/10

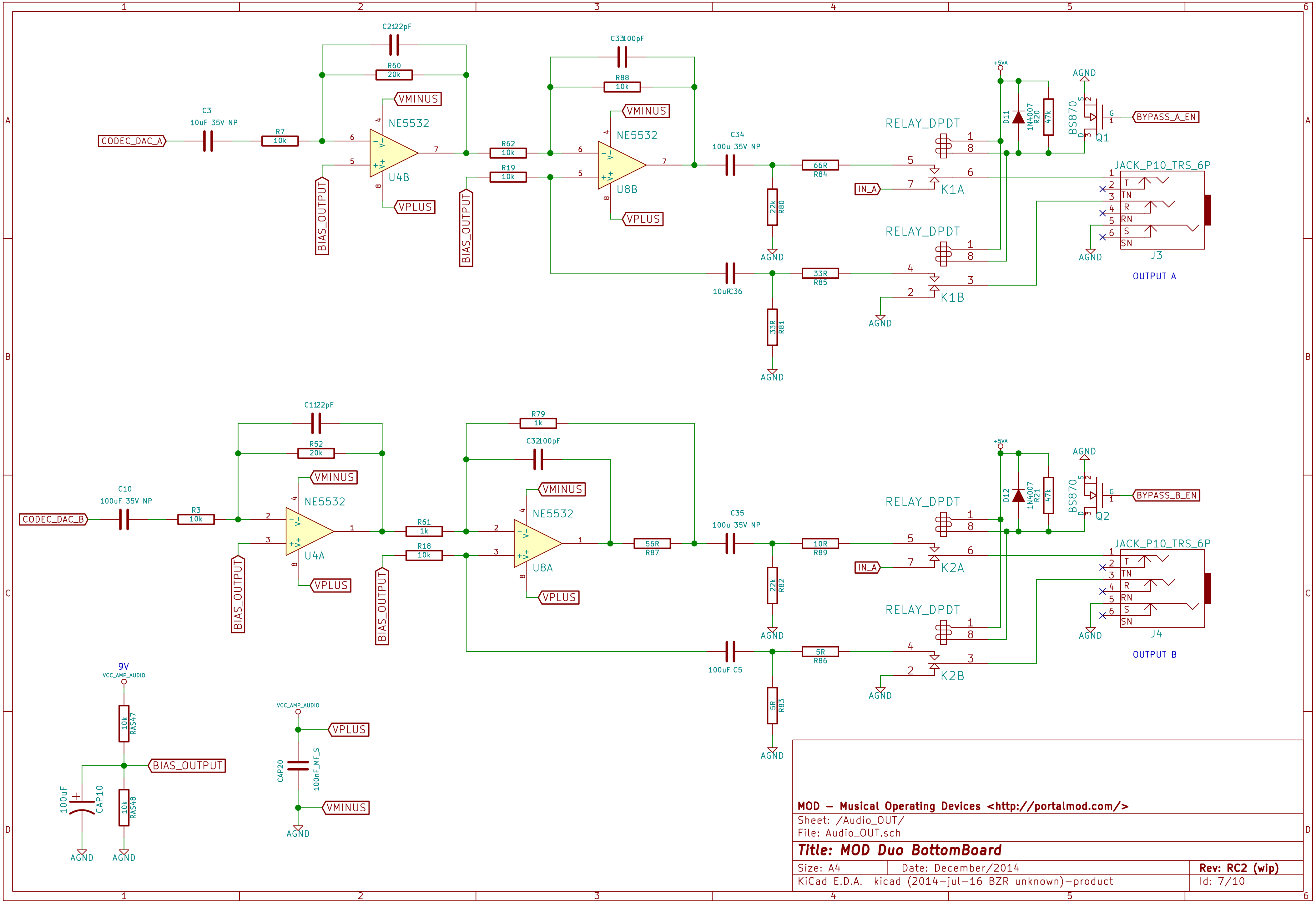

1
2
3
4
5
6
A
B
C
D
C21 22pF
R60
20k
C3
10uF 35V NP
R7
10k
CODEC_DAC_A
VMINUS
NE5532
U4B
VPLUS
BIAS_OUTPUT
R62
10k
R19
10k
C33 100pF
R88
10k
NE5532
U8B
C34
100u 35V NP
R84
66R
22k
R80
AGND
10uF C36
33R
R85
33R
R81
RELAY_DPDT
K1A
K1B
IN_A
+5VA
D11
1N4007
R20
47k
BS870
Q1
BYPASS_A_EN
JACK_P10_TRS_6P
T
TN
R
RN
S
SN
J3
OUTPUT A
C11 22pF
R52
20k
C10
100uF 35V NP
R3
10k
CODEC_DAC_B
NE5532
U4A
R79
1k
C32 100pF
R61
1k
R18
10k
NE5532
U8A
56R
R87
C35
100u 35V NP
10R
R89
22k
R82
100uF C5
5R
R86
5R
R83
K2A
K2B
D12
1N4007
R21
47k
Q2
BYPASS_B_EN
J4
OUTPUT B
9V
VCC_AMP_AUDIO
10k
RAS47
BIAS_OUTPUT
100uF
CAP10
10k
RAS48
CAP20
100nF_MF_S

MOD - Musical Operating Devices <http://portalmod.com/>

Sheet: /Audio_OUT/
File: Audio_OUT.sch

Title: MOD Duo BottomBoard

Size: A4	Date: December/2014	**Rev: RC2 (wip)**
KiCad E.D.A.	kicad (2014-jul-16 BZR unknown)-product	Id: 7/10

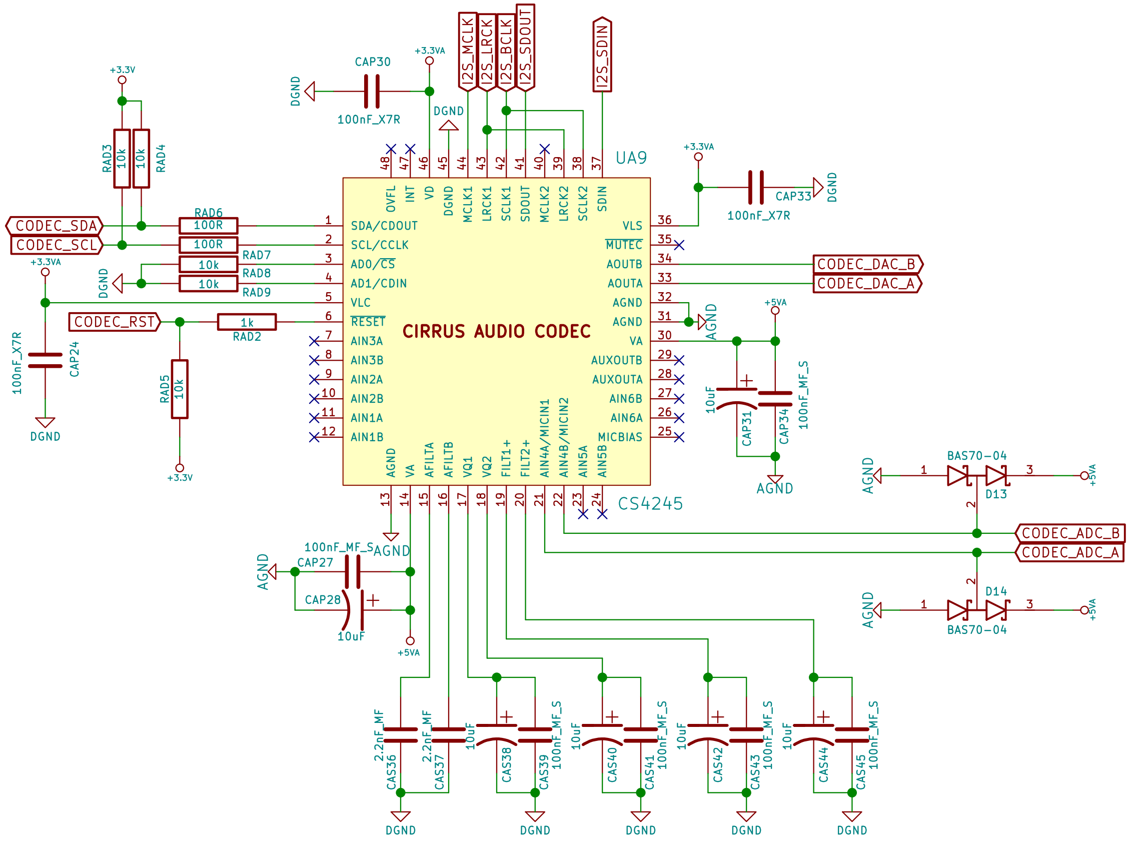
CIRRUS AUDIO CODEC
UA9
CS4245
SDA/CDOUT
SCL/CCLK
AD0/CS
AD1/CDIN
VLC
RESET
AIN3A
AIN3B
AIN2A
AIN2B
AIN1A
AIN1B
OVFL
INT
VD
DGND
MCLK1
LRCK1
SCLK1
SDOUT
MCLK2
LRCK2
SCLK2
SDIN
VLS
MUTEC
AOUTB
AOUTA
AGND
AGND
VA
AUXOUTB
AUXOUTA
AIN6B
AIN6A
MICBIAS
AGND
VA
AFILTA
AFILTB
VQ1
VQ2
FILT1+
FILT2+
AIN4A/MICIN1
AIN4B/MICIN2
AIN5A
AIN5B
I2S_MCLK
I2S_LRCK
I2S_BCLK
I2S_SDOUT
I2S_SDIN
CODEC_SDA
CODEC_SCL
CODEC_RST
CODEC_DAC_B
CODEC_DAC_A
CODEC_ADC_B
CODEC_ADC_A
RAD3 10k
RAD4 10k
RAD6 100R
100R
RAD7 10k
RAD8 10k
RAD9
RAD2 1k
RAD5 10k
CAP30 100nF_X7R
CAP33 100nF_X7R
CAP24 100nF_X7R
CAP31 10uF
CAP34 100nF_MF_S
CAP27 100nF_MF_S
CAP28 10uF
CAS36 2.2nF_MF
CAS37 2.2nF_MF
CAS38 10uF
CAS39 100nF_MF_S
CAS40 10uF
CAS41 100nF_MF_S
CAS42 10uF
CAS43 100nF_MF_S
CAS44 10uF
CAS45 100nF_MF_S
D13 BAS70-04
D14 BAS70-04
+3.3V
+3.3VA
+5VA
DGND
AGND

MOD – Musical Operating Devices <http://portalmod.com/>

Sheet: /Audio_CODEC/
File: Audio_CODEC.sch

Title: MOD Duo BottomBoard

Size: A4
Date: December/2014
Rev: RC2 (wip)
KiCad E.D.A. kicad (2014-jul-16 BZR unknown)-product
Id: 8/10

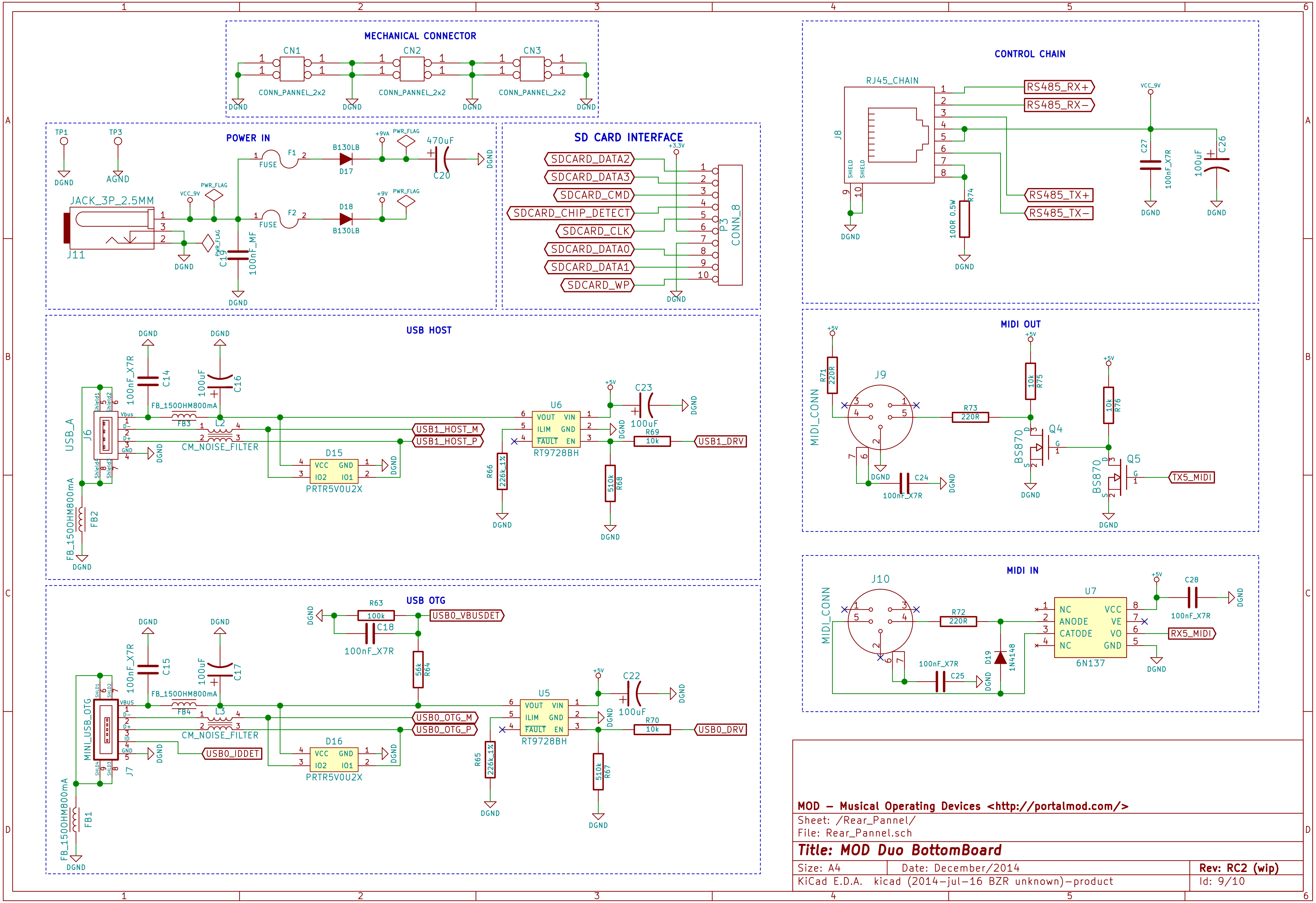
1
2
3
4
5
6
A
B
C
D
MECHANICAL CONNECTOR
CN1
CN2
CN3
CONN_PANNEL_2x2
CONN_PANNEL_2x2
CONN_PANNEL_2x2
DGND
DGND
DGND
DGND
POWER IN
TP1
TP3
DGND
AGND
JACK_3P_2.5MM
J11
VCC_9V
PWR_FLAG
PWR_FLAG
FUSE
F1
FUSE
F2
B130LB
D17
B130LB
D18
+9VA
PWR_FLAG
+9V
PWR_FLAG
470uF
C20
DGND
C19
100nF_MF
DGND
DGND
SD CARD INTERFACE
+3.3V
SDCARD_DATA2
SDCARD_DATA3
SDCARD_CMD
SDCARD_CHIP_DETECT
SDCARD_CLK
SDCARD_DATA0
SDCARD_DATA1
SDCARD_WP
P3
CONN_8
DGND
CONTROL CHAIN
RJ45_CHAIN
J8
SHIELD
SHIELD
RS485_RX+
RS485_RX-
RS485_TX+
RS485_TX-
VCC_9V
C27
100nF_X7R
100uF
C26
R74
100R 0.5W
DGND
DGND
DGND
DGND
USB HOST
DGND
DGND
100nF_X7R
C14
100uF
C16
USB_A
J6
FB_150OHM800mA
FB3
L2
CM_NOISE_FILTER
USB1_HOST_M
USB1_HOST_P
D15
VCC GND
IO2 IO1
PRTR5V0U2X
U6
VOUT VIN
ILIM GND
FAULT EN
RT9728BH
+5V
C23
100uF
R69
10k
USB1_DRV
R66
226k_1%
R68
510k
DGND
DGND
DGND
FB_150OHM800mA
FB2
DGND
MIDI OUT
+5V
R71
220R
MIDI_CONN
J9
R73
220R
+5V
R75
10k
+5V
R76
10k
Q4
BS870
Q5
BS870
TX5_MIDI
C24
100nF_X7R
DGND
DGND
DGND
DGND
USB OTG
DGND
R63
100k
USB0_VBUSDET
C18
100nF_X7R
R64
56k
DGND
DGND
100nF_X7R
C15
100uF
C17
MINI_USB_OTG
J7
FB_150OHM800mA
FB4
L3
CM_NOISE_FILTER
USB0_OTG_M
USB0_OTG_P
USB0_IDDET
D16
VCC GND
IO2 IO1
PRTR5V0U2X
U5
VOUT VIN
ILIM GND
FAULT EN
RT9728BH
+5V
C22
100uF
R70
10k
USB0_DRV
R65
226k_1%
R67
510k
DGND
DGND
DGND
FB_150OHM800mA
FB1
DGND
MIDI IN
J10
MIDI_CONN
R72
220R
D19
1N4148
100nF_X7R
C25
DGND
U7
NC VCC
ANODE VE
CATODE VO
NC GND
6N137
+5V
C28
100nF_X7R
DGND
RX5_MIDI
DGND

MOD - Musical Operating Devices <http://portalmod.com/>

Sheet: /Rear_Pannel/
File: Rear_Pannel.sch

Title: MOD Duo BottomBoard

Size: A4	Date: December/2014	**Rev: RC2 (wip)**
KiCad E.D.A.	kicad (2014-jul-16 BZR unknown)-product	Id: 9/10

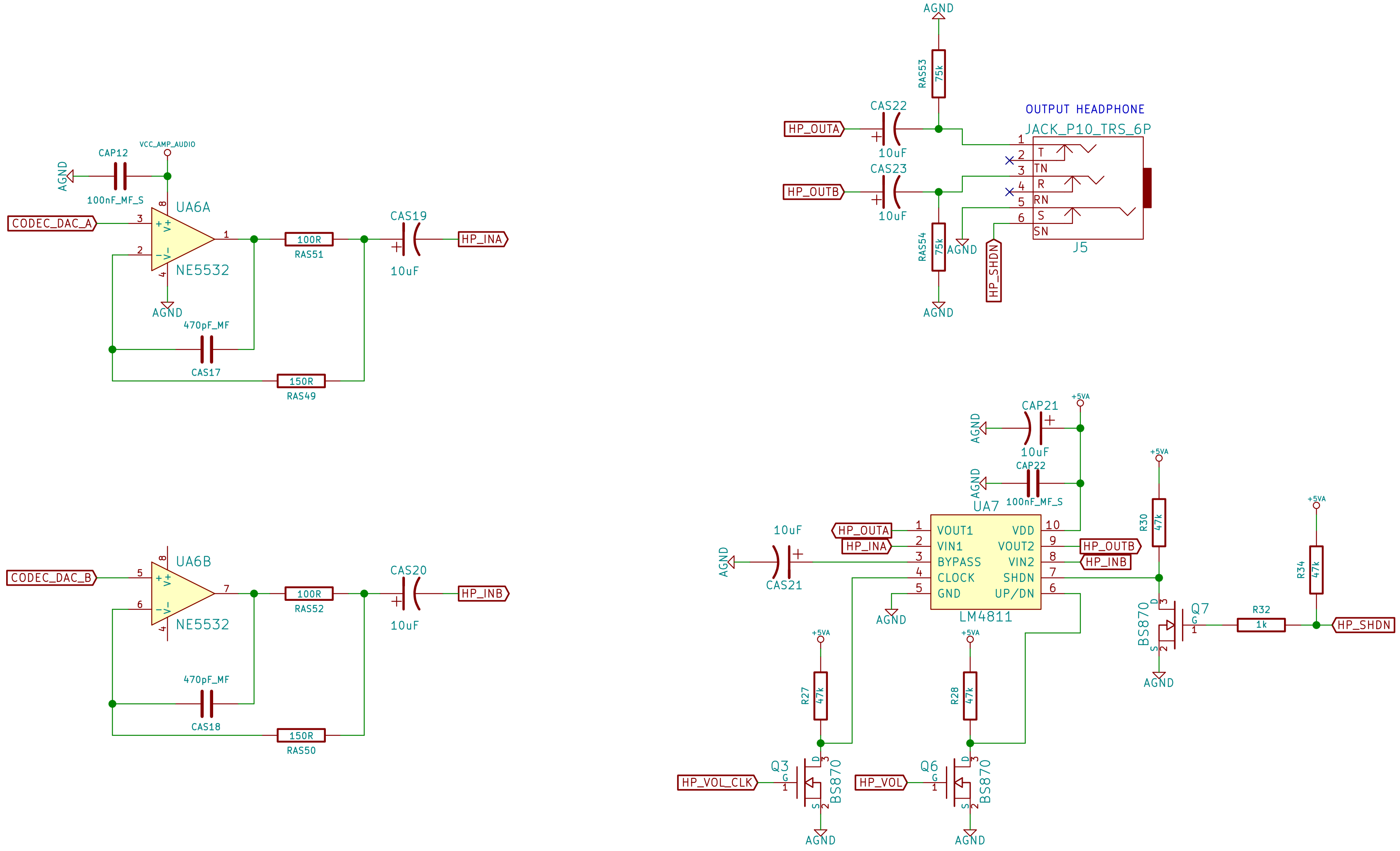
AGND
CAP12
VCC_AMP_AUDIO
100nF_MF_S
UA6A
CODEC_DAC_A
NE5532
100R
RAS51
CAS19
HP_INA
10uF
AGND
470pF_MF
CAS17
150R
RAS49
UA6B
CODEC_DAC_B
NE5532
100R
RAS52
CAS20
HP_INB
10uF
470pF_MF
CAS18
150R
RAS50
AGND
RAS53
75k
CAS22
HP_OUTA
10uF
CAS23
HP_OUTB
10uF
RAS54
75k
AGND
AGND
HP_SHDN
OUTPUT HEADPHONE
JACK_P10_TRS_6P
T
TN
R
RN
S
SN
J5
CAP21
+5VA
10uF
CAP22
100nF_MF_S
AGND
AGND
UA7
VOUT1
VIN1
BYPASS
CLOCK
GND
VDD
VOUT2
VIN2
SHDN
UP/DN
LM4811
HP_OUTA
HP_INA
HP_OUTB
HP_INB
10uF
CAS21
AGND
AGND
R30
47k
R34
47k
Q7
BS870
R32
1k
HP_SHDN
AGND
R27
47k
R28
47k
Q3
BS870
HP_VOL_CLK
Q6
BS870
HP_VOL
AGND
AGND

Sheet: /Audio _HEADPHONES/
File: Audio_HEADPHONES.sch

Title:

Size: A4	Date:	**Rev:**
KiCad E.D.A. kicad (2014-jul-16 BZR unknown)-product		Id: 10/10